PHASE 1 PART B:

TWIN FALLS COUNTY - WRIGHT AVE. JAIL

2515 Wright Ave, Twin Falls, ID 83301

PH 1 PART B SHEET INDEX	
Sheet Number	Sheet Name
A1B-0.0	TITLE SHEET
A1B-0.1	CODE ANALYSIS
A1B-0.2	CODE ANALYSIS - OCCUPANCY
A1B-0.3	CODE ANALYSIS - EXIT PLAN
A1B-0.4	CODE ANALYSIS - FIRE & SMOKE
A1B-0.5	FIRE ANALYSIS & PENETRATIONS
A1B-0.6	CODE REQUIREMENTS
A1B-0.7	CODE REQUIREMENTS
A1B-1.0	PH 1 PART B - DEMO SITE PLAN
A1B-1.1	PH 1 PART B - REMODEL SITE PLAN
C-1.	SITE PLAN
C-2.	GRADING & STORM UTILITY PLAN
C-3.	WATER UTILITY PLAN
C.4	SEWER UTILITY PLAN
C..5	LIFT STATION DETAILS
C..6	DETAILS
C..7	LAND PLAT
C-8	Unnamed
SL1.0	LANSCAPING PLAN
SL1.5	LANSCAPING DETAILS
SL2.0	IRRIGATION PLAN
SL2.5	IRRIGATION DETAILS
SL3.0	GRAVITY IRRIGATION PLAN
SL3.5	GRAVITY IRRIGATION DETAILS
SL3.6	GRAVITY IRRIGATION DETAILS
SL3.7	GRAVITY IRRIGATION DETAILS
A1B-2.0	PH 1 PART B - AREA E REMODEL FLOOR PLAN
A1B-2.1	PH 1 PART B - FLOOR PLANS
A1B-2.2	PH 1 PART B - ENLARGED MAIN FLOOR FLOOR PLAN
A1B-2.3	PH 1 PART B - ENLARGED MAIN FLOOR PLAN
A1B-2.4	PH 1 PART B - ENLARGED KITCHEN PLAN
A1B-2.5	PH 1 PART B CONTROL ROOM ENLARGED
A1B-2.6	ENLARGED MEZZANINE LEVEL
A1B-2.7	ENLARGED 2ND LEVEL PROGRAMMING
A1B-3.0	PH 1 PART B - EXTERIOR ELEVATIONS
A1B-3.1	PH 1 PART B - EXTERIOR ELEVATIONS
A1B-3.2	PH 1 PART B - EXTERIOR ELEVATION
A1B-3.3	PH1 PART B - AREA E - ELEVATION
A1B-4.0	PH 1 PART B - ROOF PLAN
A1B-4.1	PH 1 PART B AREA E ROOF PLAN
A1B-5.0	PH 1 PART B - BUILDING SECTIONS
A1B-5.1	PH 1 PART B - BUILDING SECTIONS
A1B-5.2	PH 1 PART B - BUILDING SECTIONS
A1B-5.3	PH 1 PART B - BUILDING SECTIONS
A1B-5.4	PH 1 PART B - BUILDING SECTIONS
A1B-6.0	WALL SECTION - STAIRS
A1B-6.1	WALL SECTION - STAIRS
A1B-7.0	PH 1 PART B - REFLECTED CEILING PLANS
A1B-8.0	INTERIOR ELEVATIONS
A1B-8.1	INTERIOR ELEVATIONS
A1B-8.2	INTERIOR ELEVATIONS
A1B-8.3	INTERIOR ELEVATIONS
A1B-9.0	PH 1 PART B - FINISH SCHEDULE
A1B-9.1	PH 1 PART B - DOOR SCHEDULE
A1B-9.3	PH 1 PART B - DOOR & WINDOW TYPES
A1B-10.0	DETAILS - SITE
A1B-10.1	DETAILS - RAILINGS
A1B-10.2	DETAILS - CMU MATERIALS AND DOORS
A1B-10.3	DETAILS - PRECAST MATERIALS AND DOORS
A1B-10.4	DETAILS - SKYLIGHTS & ROOF DRAINS
A1B-10.5	DETAILS - ROOF DETAILS
A1B-10.6	DETAILS - LADDERS & ACCESS HATCH
A1B-10.7	DETAILS - STAIRS & MESH
A1B-10.8	DETAILS - CEILING
A1B-10.9	DETAILS - INTERIOR
S1B-1.0	GENERAL STRUCTURAL NOTES
S1B-1.1.	GENERAL STRUCTIRAL NOTES
S1B-1.2.	TYPICAL DETAILS
S1B-1.3.	TYPICAL DETAILS
S1B-1.4.	TYPICAL DETAILS
S1B-2.0.	FOUNDATION PLAN

PH 1 PART B SHEET INDEX	
Sheet Number	Sheet Name
S1B-2.1.	MEZZANINE FLOOR AND LOW ROOF FRAMING PLAN
S1B-2.2.	ROOF FRAMING PLAN
S1B-2.3	CONTROL ROOM FLOOR FRAMING & FOUNDATION PLAN
S1B-3.0.	FOUNDATION DETAILS
S1B-3.1	FOUNDATION DETAILS
S1B-4.0.	FLOOR FRAMING DETAILS
S1B-4.1	FLOOR FRAMING DETAILS
S1B-5.0.	ROOF FRAMING DETAILS
S1B-5.1.	ROOF FRAMING DETAILS
S1B-5.2	ROOF FRAMING DETAILS
S1B-6.0	ROOF & FLOOR LOADING KEY PLANS
P1B-1.0	PHASE 1 PART B - PLUMBING FLOOR PLAN
P1B-1.1	PH 1 PART B PLUMBING FLOOR PLAN - PART A
P1B-1.2	PH 1 PART B PLUMBING FLOOR PLAN- PART B
P1B-1.3	PH 1 PART B PLUMBING MEZZANINE PLAN
P1B-2.1	PH 1 PART LARGE SCALE PLUMBING PLAN
P1B-2.2	PH 1 PART B LARGE SCALE KITCHEN PLAN
P1B-3.1	PLUMBING DETAILS
P1B-3.2	PHASE 1 PART B - PLUMBING FIXTURE SCHEDULE
P1B-3.3	PH 1 PART B PLUMBING FIXTURE SCHEDULE
M1B-1.1	PH 1 PART B MECHANICAL FLOOR PLAN - PART A
M1B-1.2	PH 1 PART B MECHANICAL FLOOR PLAN - PART B
M1B-1.3	PH 1 PART B MECHANICAL MEZZANINE PLAN
M1B-3.1	PH 1 PART B MECHANICAL DETAILS
M1B-3.2	PH 1 PART B SEISMIC RESTRAINT DETAILS
M1B-3.3	PH 1 PART B MECHANICAL SCHEDULES AND LEGEND
E1B-0.0	ELECTRICAL SYMBOLS & DETAILS
E1B-0.1	EXISTING ELECTRICAL SITE PLAN
E1B-0.2	ELECTRICAL SITE PLAN
E1B-0.3	OVERALL FLOOR PLANS
E1B-1.0A	MAIN FLOOR LIGHTING PLAN - AREA 'A' & SCHEDULES
E1B-1.0B	MAIN FLOOR LIGHTING PLAN - AREA 'B'
E1B-1.1A	MEZZANINE LIGHTING PLAN - AREA 'A'
E1B-1.1B	MEZZANINE LIGHTING PLAN - AREA 'B'
E1B-2.0A	MAIN FLOOR POWER/DATA PLAN - AREA 'A'
E1B-2.0B	MAIN FLOOR POWER/DATA PLAN - AREA 'B'
E1B-2.1	MEZZANINE POWER/DATA PLANS
E1B-2.2E	MAIN FLOOR POWER/DATA PLAN - AREA 'E'
E1B-2.3	ROOF ELECTRICAL PLAN
E1B-3.0A	MAIN FLOOR SECURITY PLAN - AREA 'A'
E1B-3.0B	MAIN FLOOR SECURITY PLAN - AREA 'B'
E1B-3.1	MEZZANINE SECURITY SYSTEM PLANS
E1B-3.2E	MAIN FLOOR SECURITY PLAN - AREA 'E"
E1B-3.3	SECURITY SYSTEM ROOF PLAN & CONTROL ROOM
E1B-3.4	SECURITY SYSTEMS SYMBOLS & SCHEDULES
E1B-4.0A	MAIN FLOOR FIRE ALARM PLAN - AREA 'A'
E1B-4.0B	MAIN FLOOR FIRE ALARM PLAN - AREA 'B'

PH 1 PART B SHEET INDEX	
Sheet Number	Sheet Name
E1B-4.1A	MEZZANINE FIRE ALARM PLAN - AREA 'A'
E1B-4.1B	MEZZANINE FIRE ALARM PLAN - AREA 'B'
E1B-4.2E	MAIN FLOOR FIRE ALARM PLAN AREA 'E'
E1B-5.0	ENLARGED KITCHEN PLAN
E1B-5.1	ENLARGED CONTROL ROOM POWER/LIGHTING PLANS
E1B-6.0.	POWER RISER DIAGRAMS & SCHEDULES
E1B-6.1.	ELECTRICAL SCHEDULES
E1B-6.2.	ELECTRICAL SCHEDULES
E1B-6.3.	ELECTRICAL DETAILS
K-1	EQUIPMENT LAYOUT
K-2	EQUIPMENT SCHEDULE
SHEET 1-5	WALK IN DRAWINGS
SHEET 1-16	HOOD DRAWINGS

DESIGN TEAM:

CIVIL:
CIVIL SCIENCE
CONTACT: STEPHAN ANDERSEN
ADDRESS: 376 FALLS AVE
TWIN FALLS, ID 83301
PHONE: (208) 737-0007 X 210

MECHANICAL & PLUMBING:
ENGINEERED SYSTEMS ASSOCIATES
CONTACT: DAVE HANSEN
ADDRESS: 1355 EAST CENTER
POCATELLO, ID 83201
PHONE: (208) 233-0501

CODE CONSULTANT:
SHUMS CODA ASSOCIATES
CONTACT: STEVE THOMAS
ADDRESS: 5610 SOUTH ULSTER ST., STE 150
DENVER, CO 80237
PHONE: (303) 257-3572

LANDSCAPE ARCHITECTURE
BRECKON LAND DESIGN
CONTACT: JON BRECKON
ADDRESS: 6661 NORTH GLENWOOD ST.
GARDEN CITY, ID 83714
PHONE: (208) 376-5153

STRUCTURAL:
RIDGE STRUCTURAL ENGINEERING
CONTACT: DAVID PORTER
ADDRESS: 1020 E. LINCOLN RD
IDAHO FALLS, ID 83401
PHONE: (208) 227-8404

ELECTRICAL:
PAYNE ENGINEERING INC
CONTACT: SHAWN MEADOR
ADDRESS: 1823 E. CENTER
POCATELLO, ID 83201
PHONE: (208) 232-4439

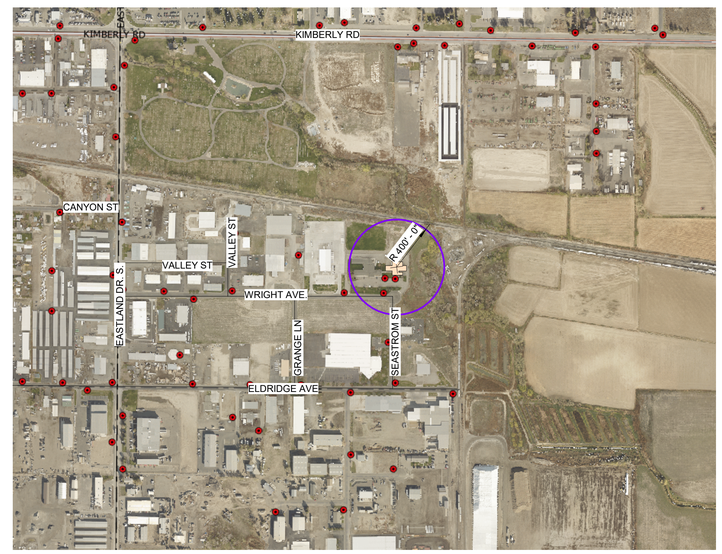

1 VICINITY MAP / FIRE HYDRANT
1" = 600'-0"

ABBREVIATIONS

AC	ACOUSTICAL CEILING	CT	CERAMIC TILE	FND	FOUNDATION	MECH	MECHANIC (-AL)	RB	RESILIENT BASE	TSCD	TOILET SEAT COVER DISPENSER
ADJ	ADJUSTABLE - ADJACENT	CTJ	CONTROL JOINT	FOC	FACE OF CONCRETE	MFR	MANUFACTURE (-R)	RD	ROOF DRAIN	TT	TIRE TREAD
AFF	ABOVE FINISH FLOOR	CTR	COUNTER (-TOP)	FRP	FIBERGLASS REINFORCED PLASTIC PANEL	MIN	MINIMUM	RO	ROUGH OPENING	TYP	TYPICAL
AL	ALUMINUM	DBL	DOUBLE	FRVR	FLAME RESISTANT VAPOR BARRIER	MISC	MISCELLANEOUS	RR	RESTROOM	UNO	UNLESS NOTED OTHERWISE
ALT	ALTERNATE	DET	DETAIL	FT	FOOT, FEET	MRGB	MOISTURE RESISTANT GYPSUM BOARD	RSF	RUBBER SHEET FLOORING	U/S	UNDERSIDE
ANOD	ANODIZED	DIA	DIAMETER	FTG	FOOTING	MTL	METAL	S	SOUTH	VB	VAPOR BARRIER
AP	ACOUSTICAL WALL PANEL	DIM	DIMENSION	FWC	FABRIC WALL COVERING	N	NORTH	SC	SOLID CORE	VCT	VINYL COMPOSITION TILE
APPROX	APPROXIMATE	DF	DRINKING FOUNTAIN	GA	GAUGE	(N)	NEW	SCU	STRUCTURAL CLAY UNIT	VERT	VERTICAL
ARCH	ARCHITECT (-URAL)	DP	DEEP	GALV	GALVANIZED	NA, N/A	NOT APPLICABLE	SD	SOAP DISPENSER	VGF	VINYL GYM FLOORING
AW	ACOUSTICAL WALL	DR	DOOR	GH	GARMENT HOOK	NIC	NOT IN CONTRACT	SDSV	STATIC DISIPATIVE SHEET VINYL	VIF	VINYL INDUSTRIAL FLOORING
AWF	ACOUSTICAL WALL FABRIC	DS	DOWNSPOUT	GMM	GLASS MESH MORTAR BOARD	NDU	SANITARY NAPKIN DISPOSAL UNIT	SF	SPECIALTY FINISH	VR	VAPOR RETARDER
BLDG	BUILDING	DWG	DRAWING	GYP BD	GYPSUM BOARD	NOM	NOMINAL	SFGL	SAFETY GLASS	VT	VINYL TILE
BM	BEAM	E	EAST	HB	HOSE BIB	NTS	NOT TO SCALE	SHTG	SHEATHING	VWF	VINYL WALL FABRIC
BOD	BOTTOM OF DECK	(E)	EXISTING	HC	HANDICAPPED	OC	ON CENTER	SIM	SIMILAR	W	WEST
BOT	BOTTOM	EA	EACH	HDR	HEADER	OD	OUTSIDE DIAMETER	SL	SLOPE	W/C	WATER CLOSET
BTWN	BETWEEN	EJ	EXPANSION JOINT	HM	HOLLOW METAL	OPP	OPPOSITE	SND	SANITARY NAPKIN DISPENSER	WD	WOOD
CB	CATCH BASIN	EL	ELEVATION	HORIZ	HORIZONTAL	PCMU	PRE-FACED CMU	SP	SPACE (-S)	W/D	WASHER & DRYER
CBT	CABINET	ELEC	ECLECTRIC (-AL)	HT	HEIGHT	PL	PLATE, PLASTIC LAMINATE	SPEC	SPECIFICATION	WDO	WINDOW
CG	CORNER GUARD	EP	ENAMEL PAINT	HVAC	HEATING/VENTILATING/ AIR CONDITIONING	P-LAM	PLASTIC LAMINATE	SQ	SQUARE	WF	WALL FABRIC
CJ	CONTROL JOINT	EQ	EQUAL	ILO	IN LIEU OF	PLWD	PLYWOOD	S/S	STAINLESS STEEL	WFV	WOOD FACE VENEER
CL	CENTERLINE	EW	EACH WAY	INSUL	INSULATION	PNL	PANEL	ST	STAIN	WG	WIRE GUARD
CLG	CEILING	EXG	EXISTING	INT	INTERIOR	PORC. TILE	PORCELAIN TILE	STL	STEEL	WGL	WIRED GLASS
CLR	CLEAR (-ANCE)	EXP	EXPANSION	JNT	JOINT	PR	PAIR	STR	STRUCTURE (-AL)	WM	WIRE MESH
CMT	CERAMIC MOSAIC TILE	EXT	EXTERIOR	KD	KNOCK DOWN	PSF	POUNDS PER SQUARE FOOT	STRG	STORAGE	W/O	WITHOUT
CMU	CONCRETE MASONRY UNIT	FA	FIRE ALARM	LAV	LAVATORY	PSI	POUNDS PER SQUARE INCH	SV	SHEET VINYL FLOORING	WOC	WALK-OFF CARPET
CO	CLEAN OUT	FD	FLOOR DRAIN	MCFP	MULTI-COLORED FINISH PAINT SYSTEM	PT	PAINT, PRESSURE TREATED	T	THREAD	WP	WATERPROOFING
COL	COLUMN	FE	FIRE EXTINGUISHER	MDO	MEDIUM DENSITY OVERLAY PLYWOOD	PTD	PAPER TOWEL DISPENSER	TBB	TILE BACKER BOARD	WPS	WALL PROTECTION SYSTEM
CONC	CONCRETE	FEC	FIRE EXTINGUISHER CABINET			QT	QUARTZ TILE	T&G	TONGUE AND GROOVE	WR	WATER RESISTANT
CONT	CONTINUOUS, CONTINUE	FF	FACTORY FINISH, FINISH FLOOR			R	RISER, RADIUS	TO	TO OF	WRGB	WATER RESISTANT GYPSUM WALLBOARD
CORR	CORRIDOR	FIN	FINISH (-ED)					TOW	TOP OF WALL	WWF	WELDED WIRE FABRIC
CP	CARPET	FLR	FLOOR (-ING)					TPD	TOILET PAPER DISPENSER	W/	WITH
CS	CONCRETE SLAB, SEALED										

LICENSED ARCHITECT AR-986981
KYNDELL M. MADSEN STATE OF IDAHO
2/24/25

DATE

PHASE 1 PART B FOR:
TWIN FALLS COUNTY - WRIGHT AVE JAIL
2515 Wright Ave, Twin Falls, ID 83301
TITLE SHEET

Laughlin Ricks Architecture
architecture/planning
134 3RD Ave East, * Twin Falls, Idaho 83301
(208) 736-8050

DATE: 2/24/25
KM Drawn
RCR Checked
#23029 PROJECT #

A1B-0.0

PLAN ANALYSIS
Based on 2018 Edition of I.B.C & I.E.B.C. PERSCRIPTIVE

Architect of Record: Laughlin Ricks Architecture, L.L.C.

Engineer:

Job Address: 2515 WRIGHT AVE., TWIN FALLS, ID 83301

Legal Description:

Occupancy Classification: I-3, CONDITION 3, 4 — Occupant Load Per Area: REFER TO SHEET A1B-0.2

Occupancy Use: JAIL — EXISTING 112 — ADDITION 240

Allowable Stories Per Code: 5 — Provided: 2 (IBC Table 505.4) — Total: 352

Floor Area: Basement: — 1st: (E) = 15,040 S.F. (N) = 32,241 S.F. — Exits Required: Basement: — 1st:

2ND: (N) = 7,747 S.F. — 3rd: — Total: 55,028 S.F. — 2nd: — 3rd: — 4th:

Total Required Exits Per Occupant Load: 2 (IBC Table 1006.3.2)

Actual furthest travel distance to exit: 162' (IBC Table 1017.2 & 1006.2.1)

Penetrations? Show Approved Listed Products on Plans:

Type of Construction: 1B — Allowable Building Height: 50'

Seismic Design Category: C — Allowable Area Calc's: UL

Automatic Sprinkler System: Yes: X No: — (IBC Table 506.2)

Maximum Floor Area Allowed: UL — Exit Signs: Yes: X No:

Special Inspections Required? Yes: X No: — Emergency Lights: Yes: X No:

Firewalls Required? (Specify Type & Rating) Yes: X No: — Fire Extinguishers Shown: Yes: X No: (IFC Section 906)

Occupancy Separation Use? Yes: No: X — Fire Hydrant Locations Shown: Yes: X No:

Areas of Refuge Required? (IBC Section 1009.2,3,4) Yes: No: X — Vestibule Required: Yes: X No:

Area Separation Required? Yes: No: X — Classified Areas? (Show on plans & Show Areas) Yes: No: X

Fire Resistance Ratings of BLDG Elements : (Specify Rating) 2 HR & 1 HR (IBC Table 601)

Minimum Roof Class: B (IBC Table 1505.1) — Exterior Wall Openings: NO LIMIT (IBC 705.8)

Fire Doors: YES, PER SCHEDULE (IBC Table 716.1.2) — Fire Alarm System: YES (IBC 907.2)

Fire Flow and Duration: — Corridor Width: 44" (IBC Table 1020.2)

Rated Structural Frame: (Roof Supports Only) Yes: X No: — Rated Corridors: Yes: X No: (IBC Section 1020.1)

Rated Bearing Walls-Exterior: Yes: X No: — Rated Bearing Walls-Interior: Yes: X No:

Rated Nonbearing Walls-Exterior: (>30' Fire Separation) Yes: No: X — Rated Bearing Walls-Interior: (Roof Supports Only) Yes: X No:

Rated Nonbearing Walls-Exterior: (10'-30' Fire Separation) Yes: X No: — Rated Nonbearing Walls-Interior: Yes: No: X

Rated Floor Construction: Yes: X No: — Rated Roof Construction: Yes: X No:

Lighting Layout and COM Check? Yes: X No:

Comments: FIRE SPRINKLER SYSTEM SHALL BE PROVIDED / MODIFIED AS REQUIRED. ALL (E) FIRE SPRINKLER HEADS SHALL BE A TYCO RAVEN TY3281 HEAD.

FIRE ALARM & DETECTION SYSTEM SHALL BE PROVIDED / MODIFIED AS REQUIRED.

1 PLAN ANALYSIS PH 1 PART B
1/4" = 1'-0"

TWIN FALLS FIRE DEPARTMENT NOTES:

1. IT SHALL BE THE RESPONSIBILITY OF THE GENERAL CONTRACTOR TO INSURE THAT ALL DEFERRED SUBMITTALS REQUIRED BY THE FIRE DEPARTMENT **HAVE BEEN APPROVED BY THE STATE PRIOR TO THE INSTALLATION OF A FIRE ALARM AND/OR FIRE SPRINKLER SYSTEM.** IT SHALL ALSO BE THE RESPONSIBILITY OF THE GENERAL CONTRACTOR TO VERIFY THAT ALL APPROPRIATE TESTING AND/OR INSPECTIONS HAVE BEEN PERFORMED BEFORE COVERING OR CALLING FOR A FINAL INSPECTION.
2. FIRE SPRINKLER UNDERGROUND PIPING
THE UNDERGROUND FIRE SPRINKLER LINE MUST MEET NFPA 24 AND THE CITY OF TWIN FALLS STANDARDS. THE INSPECTION AND TESTING OF THE UNDERGROUND FIRE SPRINKLER LINE SHALL BE OVERSEEN BY THE TWIN FALLS FIRE MARSHALL.
3. SPRINKLER SYSTEM(S)
SPRINKLER SYSTEM PLANS SHALL BE SENT TO THE STATE FIRE MARSHAL OFFICE AND DESIGNED IN ACCORDANCE WITH CURRENT NFPA 13 STANDARDS.
IDAHO STATE FIRE MARSHAL
700 WEST STATE STREET, 3RD FLOOR
BOISE, IDAHO 83720
PLANS SHALL MEET CURRENT IFC, NFPA 13R AND IDAHO STATE PLUMBING CODES, AND BE APPROVED PRIOR TO INSTALLATION.
4. FDC VISUAL ALARM A VISUAL ALARM DEVICE (EXTERIOR HORN/STROBE) SHALL BE PROVIDED IN THE AREA OF THE FDC.
5. APPROVED SIGNS SHALL BE INSTALLED ON THE FIRE RISER ROOM DOOR AND ON THE FIRE DEPARTMENT CONNECTION.

TABLE 504.3
ALLOWABLE BUILDING HEIGHT IN FEET ABOVE GRADE PLANE

OCCUPANCY CLASSIFICATION	SEE FOOTNOTES	TYPE OF CONSTRUCTION									
		TYPE I		TYPE II		TYPE III		TYPE IV	TYPE V		
		A	B	A	B	A	B	HT	A	B	
I-1 CONDITION 1, I-3	NS[f,g]	UL	160	65	55	65	55	65	50	40	
	S	UL	180	85	75	85	75	85	70	60	

2 TABLE 504.3 PH 1 PART B
1/4" = 1'-0"

TABLE 506.2
ALLOWABLE AREA FACTOR (A_t = NS, S, S13R, OR SM, AS APPLICABLE) IN SQUARE FEET

OCCUPANCY CLASSIFICATION	SEE FOOTNOTES	TYPE OF CONSTRUCTION									
		TYPE I		TYPE II		TYPE III		TYPE IV	TYPE V		
		A	B	A	B	A	B	HT	A	B	
I-3	NS[f,g]	UL	UL	15,000	10,000	10,500	7,500	12,000	7,500	5,000	
	S1	UL	UL	45,000	40,000	42,000	30,000	48,000	30,000	20,000	
	SM	UL	UL	45,000	30,000	31,500	22,500	36,000	22,500	15,000	

4 TABLE 506.2 PH 1 PART B
1/4" = 1'-0"

TABLE 601
FIRE-RESISTANCE RATING REQUIREMENTS FOR BUILDING (HOURS)

BUILDING ELEMENT	TYPE OF CONSTRUCTION									
	TYPE I		TYPE II		TYPE III		TYPE IV	TYPE V		
	A	B	A	B	A	B	HT	A	B	
PRIMARY STRUCTURAL FRAME[i] (SEE SECTION 202)	3[a,b]	2[a,b]						1[b]		
BEARING WALLS EXTERIOR [e,f] INTERIOR	3 3[a]	2 2[a]						1		
NON BEARING WALLS AND PARTITIONS EXTERIOR	SEE TABLE 602									
NON BEARING WALLS AND PARTITIONS INTERIOR	0	0						0		
FLOOR CONSTRUCTION AND ASSOCIATED SECONDARY MEMBERS (SEE SECTION 202)	2	2						1		
ROOF CONSTRUCTION AND ASSOCIATED SECONDARY MEMBERS (SEE SECTION 202)	1 1/2[b]	1[b,c]						1[b,c]		

6 TABLE 601 PH 1 PART B
1/4" = 1'-0"

TABLE 1020.1
CORRIDOR FIRE-RESISTANCE RATING

OCCUPANCY	OCCUPANT LOAD SERVED BY CORRIDOR	REQUIRED FIRE-RESISTANCE RATING (HOURS)	
		WITHOUT SPRINKLER SYSTEM (feet)	WITH SPRINKLER SYSTEM (feet)
H-1, H-2, H-3	ALL	NOT PERMITTED	1
H-4, H-5	GREATER THAN 30	NOT PERMITTED	1
A, B, E, F, M, S, U	GREATER THAN 30	1	0
R	GREATER THAN 10	NOT PERMITTED	0.5
I-2[a], I-4	ALL	NOT PERMITTED	0
I-1, I-3	ALL	NOT PERMITTED	1[b]

b. For a reduction in fire-resistance rating for the occupancies in Group I-3, see section 408.8

7 TABLE 1020.1 PH 1 PART B
1/4" = 1'-0"

TABLE 1017.2
EXIT ACCESS TRAVEL DISTANCE[a]

OCCUPANCY	WITHOUT SPRINKLER SYSTEM (feet)	WITH SPRINKLER SYSTEM (feet)
A, E, F-1, M, R, S-1	200	250[b]
I-1	NOT PERMITTED	250[b]
B	200	300[b]
F-2, S-2, U	300	400[c]
H-1	NOT PERMITTED	75[d]
H-2	NOT PERMITTED	100[d]
H-3	NOT PERMITTED	150[d]
H-4	NOT PERMITTED	175[d]
H-5	NOT PERMITTED	200[c]
I-2, I-3, I-4	NOT PERMITTED	200[c]

9 TABLE 1017.2
1/4" = 1'-0"

TABLE 1020.2
MINIMUM CORRIDOR WIDTH

OCCUPANCY	MINIMUM WIDTH (INCHES)
ANY FACILITY NOT LISTED IN THIS TABLE	44
ACCESS TO AND UTILIZATION OF MECHANICAL, PLUMBING OR ELECTRICAL SYSTEMS OR EQUIPMENT	24
WITH AN OCCUPANT LOAD OF LESS THAN 50	36
WITHIN A DWELLING UNIT	36
IN GROUP E WITH A CORRIDOR HAVING AN OCCUPANT LOAD OF 100 OR MORE	72
IN CORRIDORS AND AREAS SERVING STRETCHER TRAFFIC IN AMBULATORY CARE FACILITES	72
GROUP I-2 IN AREAS WHERE REQUIRED FOR BED MOVEMENT	96

8 TABLE 1020.2 PH 1 PART B
1/4" = 1'-0"

TABLE 504.4
ALLOWABLE NUMBER OF STORIES ABOVE GRADE PLANE

OCCUPANCY CLASSIFICATION	SEE FOOTNOTES	TYPE OF CONSTRUCTION									
		TYPE I		TYPE II		TYPE III		TYPE IV	TYPE V		
		A	B	A	B	A	B	HT	A	B	
I-3	NS[d,f]	UL	4	2	1	2	1	2	2	1	
	S	UL	5	3	2	3	2	3	3	2	

3 TABLE 504.4 PH 1 PART B
1/4" = 1'-0"

TABLE 803.11
INTERIOR WALL AND CEILING FINISH REQUIREMENTS BY OCCUPANCY[k]

GROUPS	SPRINKLERED			NONSPRINKLERED		
	INTERIOR EXIT STAIRWAYS AND RAMPS AND EXIT PASSAGEWAYS[a,b]	CORRIDORS AND ENCLOSURES FOR EXIT ACCESS STAIRWAYS AND RAMPS	ROOMS AND ENCLOSED SPACES[c]	INTERIOR EXIT STAIRWAYS AND RAMPS AND EXIT PASSAGEWAYS[a,b]	CORRIDORS AND ENCLOSURES FOR EXIT ACCESS STAIRWAYS AND RAMPS	ROOMS AND ENCLOSED SPACES[c]
I-3	A	A	C	A	A	B

5 TABLE 803.11 PH 1 PART B
1/4" = 1'-0"

OCCUPANCY GROUP I-3 CONDITION 3
308.4.3 CONDITION 3. THIS OCCUPANCY CONDITION SHALL INCLUDE BUILDINGS IN WHICH FREE MOVEMENT IS ALLOWED WITHIN INDIVIDUAL SMOKE COMPARTMENTS, SUCH AS WITHIN A RESIDENTIAL UNIT COMPRISED OF INDIVIDUAL SLEEPING UNITS AND GROUP ACTIVITY SPACES, WHERE EGRESS IS IMPEDED BY REMOTE CONTROL RELEASE OF MEANS OF EGRESS FROM SUCH A SMOKE COMPARTMENT TO ANOTHER SMOKE COMPARTMENT.

OCCUPANCY GROUP I-3 CONDITION 4
308.4.4 CONDITION 4. THIS OCCUPANCY CONDITION SHALL INCLUDE BUILDINGS IN WHICH FREE MOVEMENT IS RESTRICTED FROM AN OCCUPIED SPACE. REMOTE-CONTROLLED RELEASE IS PROVIDED TO PERMIT MOVEMENT FROM SLEEPING UNITS, ACTIVITY SPACES AND OTHER OCCUPIED AREAS WITHIN THE SMOKE COMPARTMENT TO OTHER SMOKE COMPARTMENTS.

408.3 MEANS OF EGRESS. EXCEPT AS MODIFIED OR AS PROVIDED FOR IN THIS SECTION, THE MEANS OF EGRESS PROVISIONS OF CHAPTER 10 SHALL APPLY.

408.3.1 DOOR WIDTH. DOORS TO RESIDENT SLEEPING UNITS SHALL HAVE A CLEAR WIDTH OF NOT LESS THAN 28 INCHES.

408.3.6 EXIT DISCHARGE. EXITS ARE PERMITTED TO DISCHARGE INTO A FENCED OR WALLED COURTYARD. ENCLOSED YARDS OR COURTS SHALL BE OF A SIZE TO ACCOMMODATE ALL OCCUPANTS, BE LOCATED NOT LESS THAN 50 FEET FROM THE BUILDING AND HAVE AN AREA OF NOT LESS THAN 15 SQUARE FEET PER PERSON.

408.4 LOCKS. EGRESS DOORS ARE PERMITTED TO BE LOCKED IN ACCORDANCE WITH THE APPLICABLE USE CONDITION. DOORS FROM A REFUGE AREA TO THE OUTSIDE ARE PERMITTED TO BE LOCKED WITH A KEY IN LIEU OF LOCKING METHODS DESCRIBED IN SECTION 408.4.1. THE KEYS TO UNLOCK THE EXTERIOR DOORS SHALL BE AVAILABLE AT ALL TIMES AND THE LOCKS SHALL BE OPERABLE FROM BOTH SIDES OF THE DOOR.

408.4.1 REMOTE RELEASE. REMOTE RELEASE OF LOCKS ON DOORS IN A MEANS OF EGRESS SHALL BE PROVIDED WITH RELIABLE MEANS OF OPERATION, REMOTE FROM THE RESIDENT LIVING AREAS, TO RELEASE LOCKS ON ALL REQUIRED DOORS. IN OCCUPANCY CONDITION 3 OR 4, THE ARRANGEMENT, ACCESSIBILITY AND SECURITY OF THE RELEASE MECHANISMS REQUIRED FOR EGRESS SHALL BE SUCH THAT WITH THE MINIMUM AVAILABLE STAFF AT ANY TIME, THE LOCK MECHANISMS ARE CAPABLE OF BEING RELEASED WITHIN 2 MINUTES.
EXCEPTION: PROVISIONS FOR REMOTE LOCKING AND UNLOCKING OF OCCUPIED ROOMS IN OCCUPANCY CONDITION 4 ARE NOT REQUIRED PROVIDED THAT NOT MORE THAN 10 LOCKS ARE NECESSARY TO BE UNLOCKED IN ORDER TO MOVE OCCUPANTS FROM ONE SMOKE COMPARTMENT TO A REFUGE AREA WITHIN 3 MINUTES. THE OPENING OF NECESSARY LOCKS SHALL BE ACCOMPLISHED WITH NOT MORE THAN TWO SEPARATE KEYS.

408.4.3 REDUNDANT OPERATION. REMOTE RELEASE, MECHANICALLY OPERATED SLIDING DOORS OR REMOTE RELEASE, MECHANICALLY OPERATED LOCKS SHALL BE PROVIDED WITH A MECHANICALLY OPERATED RELEASE MECHANISM AT EACH DOOR, OR SHALL BE PROVIDED WITH A REDUNDANT REMOTE RELEASE CONTROL.

408.4.4 RELOCK CAPABILITY. DOORS REMOTELY UNLOCKED UNDER EMERGENCY CONDITIONS SHALL NOT AUTOMATICALLY RELOCK WHEN CLOSED UNLESS SPECIFIC ACTION IS TAKEN AT THE REMOTE LOCATION TO ENABLE DOORS TO RELOCK.

408.6 SMOKE BARRIER. OCCUPANCIES IN GROUP I-3 SHALL HAVE SMOKE BARRIERS COMPLYING WITH SECTIONS 408.7 AND 709 TO DIVIDE EVERY STORY OCCUPIED BY RESIDENTS FOR SLEEPING, OR ANY OTHER STORY HAVING AN OCCUPANT LOAD OF 50 OR MORE PERSONS, INTO NO FEWER THAN TWO SMOKE COMPARTMENTS.
EXCEPTION: SPACES HAVING A DIRECT EXIT TO ONE OF THE FOLLOWING, PROVIDED THAT THE LOCKING ARRANGEMENT OF THE DOORS INVOLVED COMPLIES WITH THE REQUIREMENTS FOR DOORS AT THE SMOKE BARRIER FOR THE USE CONDITION INVOLVED:
1. A PUBLIC WAY.

408.8.1 I-3 CONDITION 4. EACH SLEEPING AREA IN OCCUPANCY CONDITIONS 3 AND 4 SHALL BE SEPERATED FROM THE ADJACENT COMMON SPACES BY A SMOKE-TIGHT PARTITION WHERE THE DISTANCE OF TRAVEL FROM THE SLEEPING AREA THROUGH THE COMMON SPACE TO BE CORRIDOR EXCEEDS 50 FEET. (SMOKE-TIGHT PARTITION NOT REQUIRED. TRAVEL DISTANCE DOES NOT EXCEED 50').

408.10 FIRE ALARM SYSTEM. A FIRE ALARM SYSTEM SHALL BE PROVIDED IN ACCORDANCE WITH SECTION 907.2.3.6

408.11 AUTOMATIC SPRINKLER SYSTEM. GROUP I-3 OCCUPANCIES SHALL BE EQUIPPED THROUGHOUT WITH AN AUTOMATIC SPRINKLER SYSTEM IN ACCORDANCE WITH SECTION 903.2.6.

LICENSED ARCHITECT AR-986981
KYNDELL M. MADSEN STATE OF IDAHO
2/24/25

DATE

PHASE 1 PART B FOR:
TWIN FALLS COUNTY - WRIGHT AVE JAIL
2515 Wright Ave, Twin Falls, ID 83301
CODE ANALYSIS

Laughlin Ricks Architecture
architecture/planning
134 3RD Ave East, * Twin Falls, Idaho 83301
(208) 736-8050

DATE: 2/24/25
KM Drawn — RCR Checked
#23029 PROJECT #

A1B-0.1

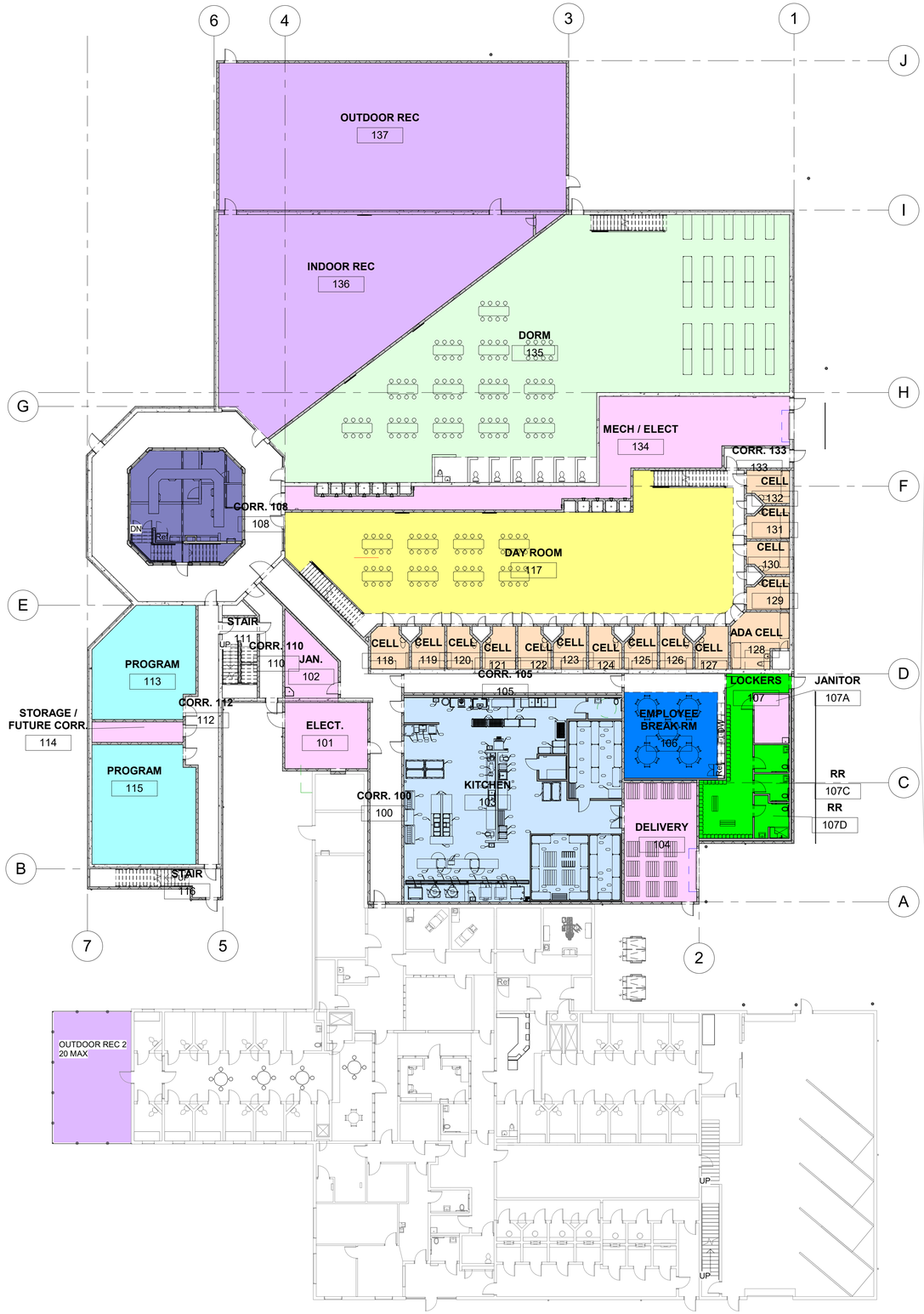

PHASE 1 PART B MAIN FLOOR
OCCUPANCY
1/16" = 1'-0"

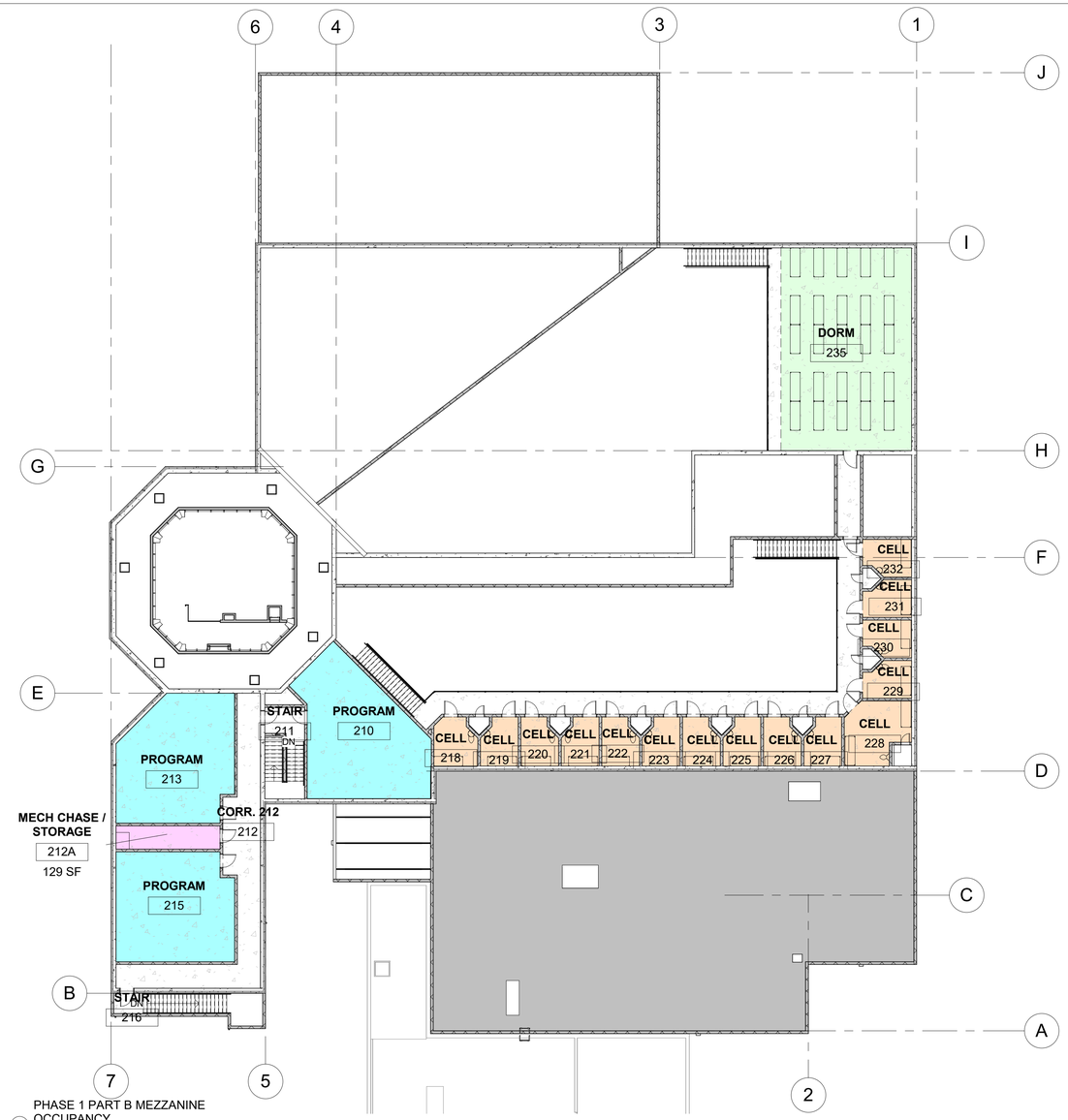

PHASE 1 PART B MEZZANINE
OCCUPANCY
1/16" = 1'-0"

OCCUPANT LOAD

SMOKE COMPARTMENT 1

TOTAL NUMBER OF BUNKS		64
DAY ROOM FOR CELL BLOCK 13	64 X 30 =	1,920 S.F. REQ'D 3,153 PROVIDED
MULTIPLE OCCUPANCY CELLS	3088 / 35 =	88 MAX 64 PROVIDED NO MORE THAN 4 IN SMOKE COMPARTMENT
ACCESSIBLE CELLS 3%	30 X 0.03=	0.9 REQ'D 1 PROVIDED
SHOWERS	64 / 12 =	5 REQ'D 5 PROVIDED
TOTAL		64 OCCUPANTS

SMOKE COMARTMENT 2

TOTAL NUMBER OF BUNKS		100
FLOOR SPACE REQUIRED	100 X 70 = 5,734 + 1,413 =	7,000 SQ. FT. REQ'D 7,147 SQ. FT. PROVIDED
SHOWERS	100 / 15 =	7 REQ'D 7 PROVIDED
TOTAL		100 OCCUPANTS
GRAND TOTAL INMATES		**164 OCCUPANTS**

SPACES USED BY NMATES

OUTDOOR RECREATION	6,636 / 35 = 189 MAX
OUTDOOR RECREATION 2	700 / 35 = 20 MAX
CLASSROOMS	3,767 SF / 20 = 188

OTHER

OFFICE / BUSINESS	466 SF / 150 = 7
KITCHEN	3081 SF / 200 = 16
STORAGE / MECH / EQUIPMENT	2,924 SF / 300 = 10
ASSEMBLY	570 SF / 15 = 38
LOCKER ROOM	700 SF / 50 = 14
TOTAL	85
GRAND TOTAL OCCUPANTS	**249**

PH 1 PART B - OCCUPANT LOAD
1/4" = 1'-0"

LICENSED ARCHITECT
AR-986981
KYNDELL M. MADSEN
STATE OF IDAHO
2/24/25

DATE

PHASE 1 PART B FOR:
TWIN FALLS COUNTY - WRIGHT AVE JAIL
2515 Wright Ave, Twin Falls, ID 83301
CODE ANALYSIS - OCCUPANCY

Laughlin Ricks Architecture
architecture/planning
134 3RD Ave East, * Twin Falls, Idaho 83301
(208) 736-8050

DATE: 2/24/25
KM Drawn
RCR Checked
#23029 PROJECT #

A1B-0.2

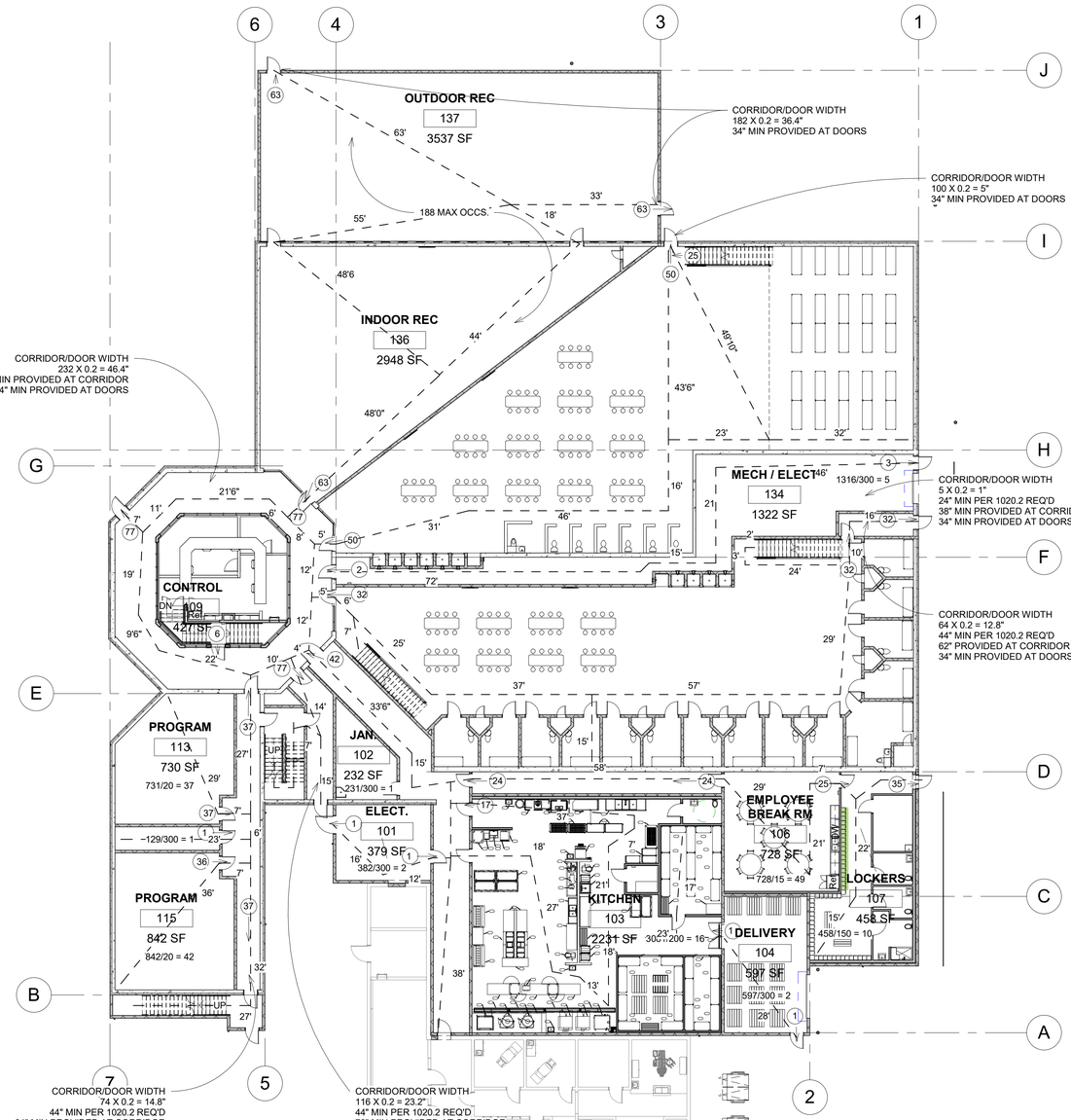

1 PHASE 1 PART B MAIN FLOOR EXITING
1/16" = 1'-0"

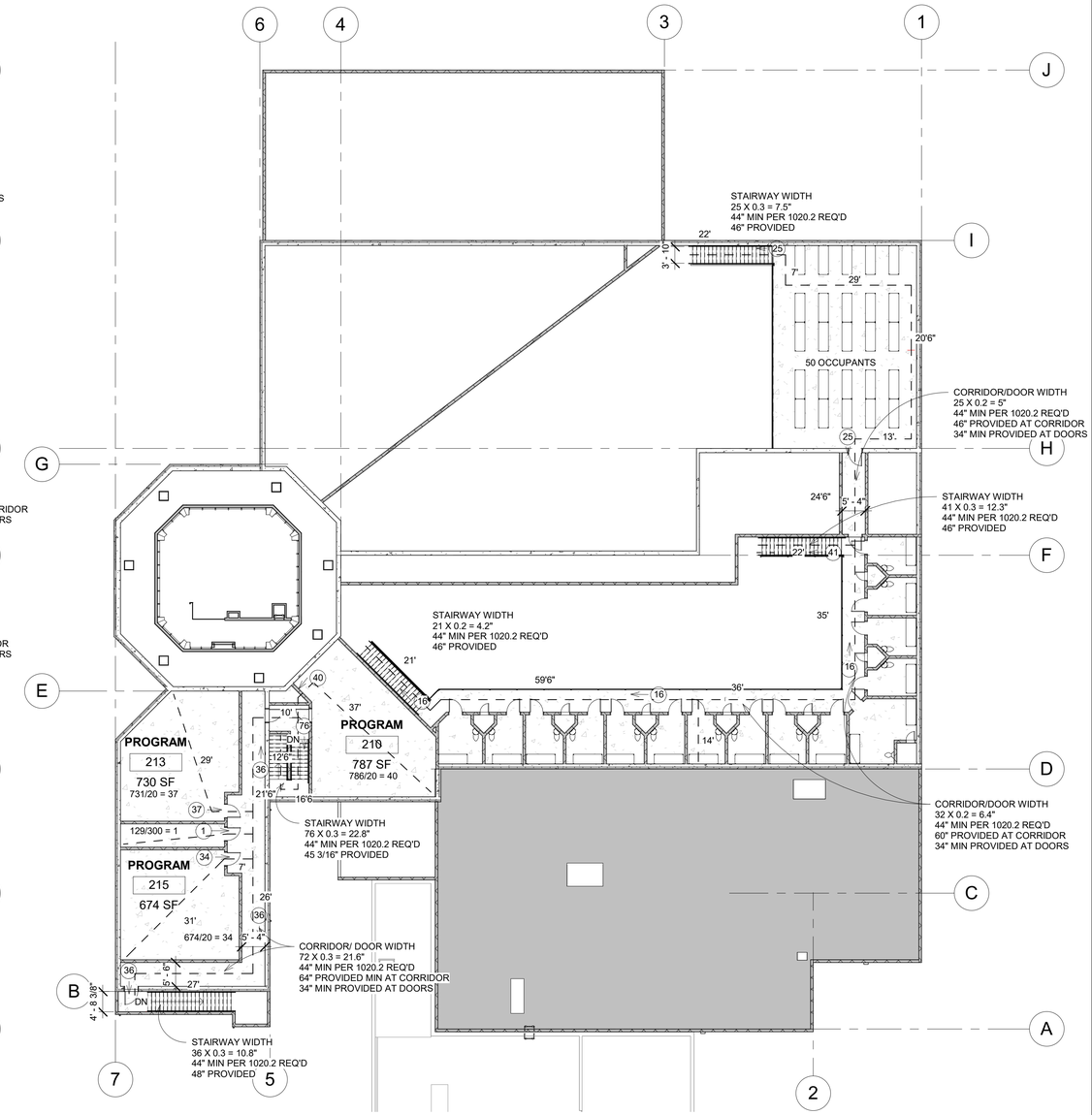

2 PHASE 1 PART B MEZZANINE EXITING
1/16" = 1'-0"

LICENSED ARCHITECT
AR-986981
KYNDELL M. MADSEN
STATE OF IDAHO
2/24/25

DATE

PHASE 1 PART B FOR:
TWIN FALLS COUNTY - WRIGHT AVE JAIL
2515 Wright Ave, Twin Falls, ID 83301
CODE ANALYSIS - EXIT PLAN

Laughlin Ricks Architecture
architecture/planning
134 3RD Ave East, * Twin Falls, Idaho 83301
(208) 736-8050

DATE: 2/24/25
KM Drawn
RCR Checked
#23029
PROJECT #

A1B-0.3

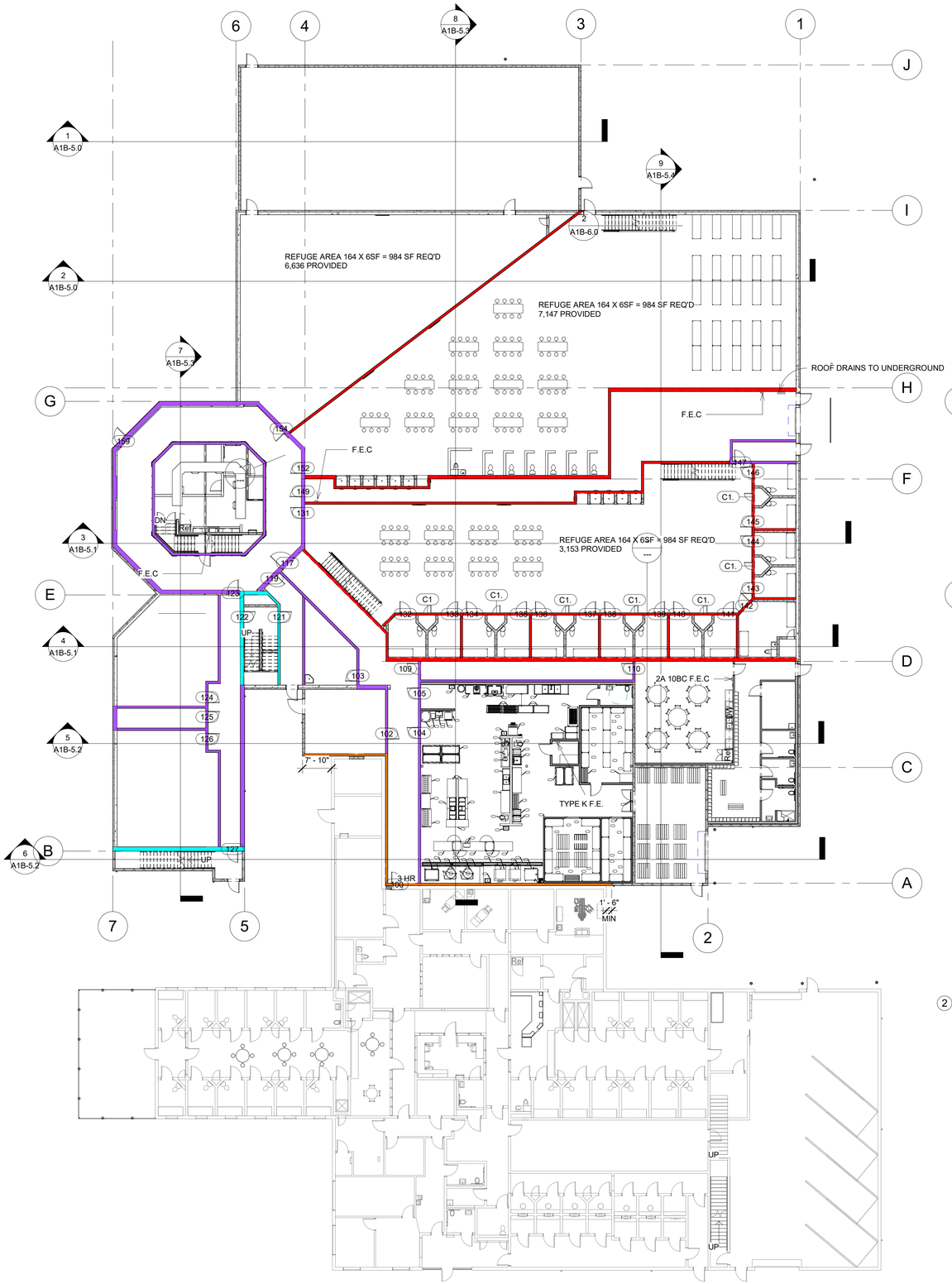

1 PHASE 1 PART B MAIN FLOOR FIRE & SMOKE
1/16" = 1'-0"

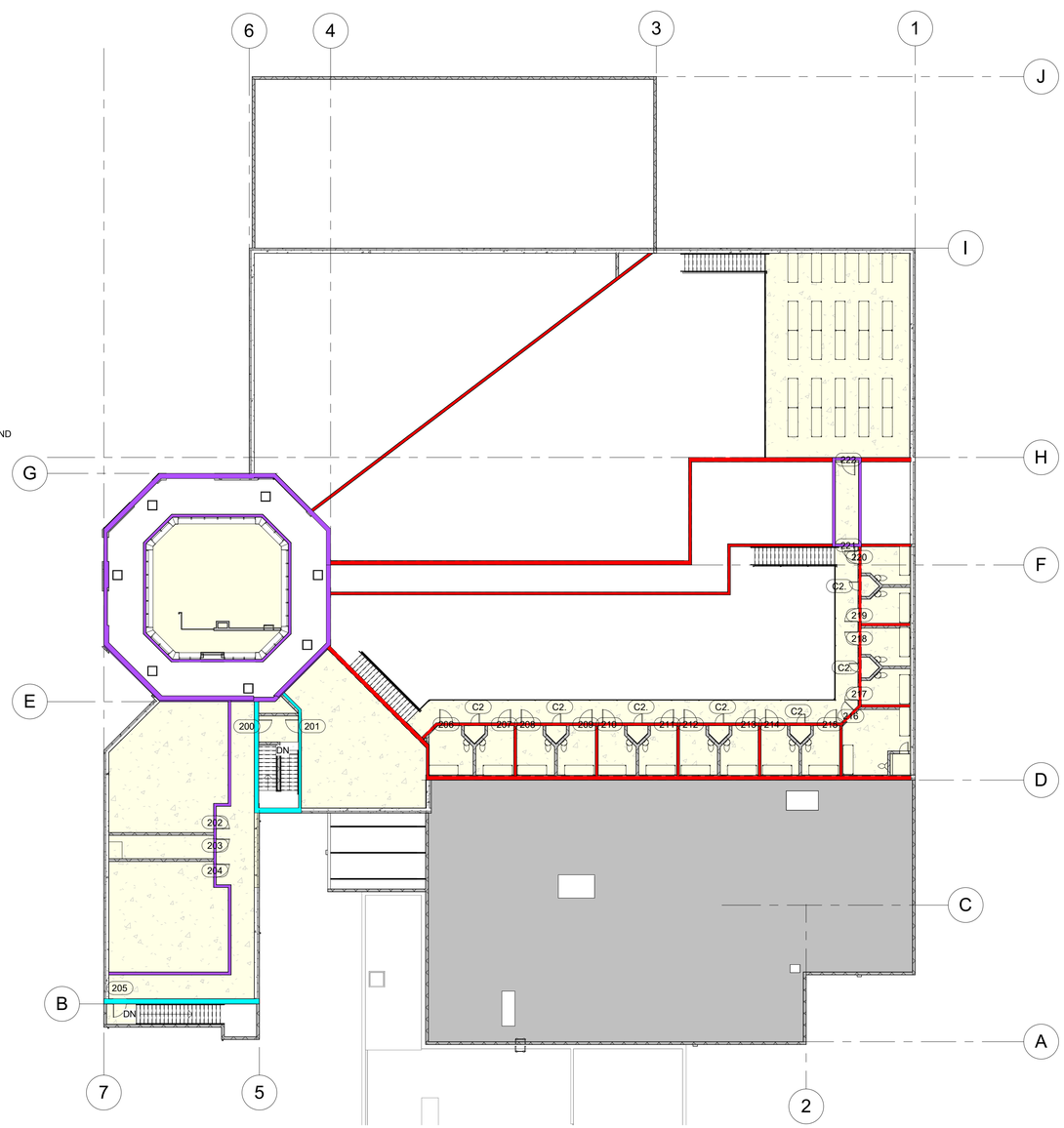

2 PHASE 1 PART B MEZZANINE FIRE & SMOKE
1/16" = 1'-0"

IFC 2018 906.2 GENERAL REQUIREMENTS'
PORTABLE FIRE ESTINGUISHERS SHALL BE SELECTED, INSTALLED AND MAINTAINED IN ACCORDANCE WITH THIS SECTIONAND NFPA 10
EXCEPTIONS:
3. IN GROUP I-3 PORTABLE FIRE ESTINGUISHERS SHALL BE PERMITTED TO BE LOCATED AT STAFF LOCATIONS

408.9 WINDOWLESS BUILDINGS
FOR THE PURPOSES OF THIS SECTION, A WINDOWLESS BUILDING OR PORTION OF A BUILDING IS ONE WITH NONOPENABLE WINDOWS, WINDOWS NOT READILY BREAKABLE OR WITHOUT WINDOWS. WINDOWLESS BUILDINGS SHALL BE PROVIDED WITH AN ENGINEERED SMOKE CONTROL SYSTEM TO PROVIDE A TENABLE ENVIRONMENT FOR EXITING FROM THE SMOKE COMPARTMENT IN THE AREA OF FIRE ORIGIN IN ACCORDANCE WITH SECTION 909 FOR EACH WINDOWLESS SMOKE COMPARTMENT

FIRE WALL TYPES

- 1 HR FIRE BARRIER - 1 HR DOORS
- 3 HR FIRE WALL - 3 HR DOORS
  VERTICAL CONTINUITY: FIRE WALL MUST EXTEND **30" MIN ABOVE BOTH ADJACENT ROOFS**
  HORIZONTAL CONTINUITY: FIRE WALLS SHALL BE CONTINUOUS FROM EXTERIOR WALL TO EXTERIOR WALL AND SHALL EXTEND **NOT LESS THAN 18 INCHES BEYOND** THE EXTERIOR SURFACE OF EXTERIOR WALL
- SMOKE BARRIER / 1 HR FIRE RESISTANT RATING - 20 MIN DOORS
- 1 HR FIRE PARTITION - 3/4 HOUR DOOR
- 2 HOUR FLOOR

NOTE: ALL WALLS ABOVE SHALL EXTEND TO THE ROOF DECK OR RATED FLOOR ABOVE U.N.O.

FIRE TYPES
1/4" = 1'-0"

LICENSED ARCHITECT
AR-986981
KYNDELL M. MADSEN
STATE OF IDAHO
2/24/25

DATE

PHASE 1 PART B FOR:
TWIN FALLS COUNTY - WRIGHT AVE JAIL
2515 Wright Ave, Twin Falls, ID 83301
CODE ANALYSIS - FIRE & SMOKE

Laughlin Ricks Architecture
architecture/planning
134 3RD Ave East, * Twin Falls, Idaho 83301
(208) 736-8050

DATE: 2/24/25
KM Drawn
RCR Checked
#23029 PROJECT #

A1B-0.4

TABLE 721.1(2)
FIRE-RESISTANCE RATING PERIODS FOR VARIOUS WALLS & PARTITIONS

MATERIAL	ITEM NUMBER	CONSTRUCTION	MINIMUM FINISHED THICKNESS FACE-TO-FACE (INCHES)			
			4 HOUR	3 HOUR	2 HOUR	1 HOUR
CONCRETE MASONRY UNITS	3-1.4	CALCAREOUS OR SILICEOUS GRAVEL	6.2	5.3	4.2	2.8
SOLID CONCRETE	4-1.1	SILICEOUS AGGREGATE	7.0	6.2	5.0	3.5

1 TABLE 721.1 PH1B
1/4" = 1'-0"

2018 INTERNATIONAL BUILDING CODE (IBC)

1. **SPECIAL DETAILED REQUIREMENTS BASED ON USE & OCCUPANCY (IBC-408/GROUP I-3)**

   a. IBC-408.5.1: FLOOR OPENINGS - OPENINGS IN FLOORS (STAIRS) WITHIN A HOUSING UNIT ARE PERMITTED WITHOUT A SHAFT ENCLOSURE. STAIRS BETWEEN FLOOR LEVELS OF THE HOUSING UNIT ARE PERMITTED WITHOUT SHAFT ENCLOSURE PROTECTION.
   b. IBC-408.5.2: SHAFT OPENINGS IN COMMUNICATING FLOOR LEVELS - PLUMBING CHASES SERVING VERTICAL STACKED CELLS ARE PERMITTED WITHOUT A SHAFT ENCLOSURE.
   c. IBC-408.6.1: SMOKE COMPARTMENTS - THE MAXIMUM SMOKE COMPARTMENT OCCUPANT LOAD ALLOWED IS 200. TRAVEL DISTANCE TO A DOOR IN A SMOKE BARRIER FROM ANY ROOM (CELL) DOOR SHALL NOT EXCEED 150 FEET. TRAVEL DISTANCE TO A DOOR IN A SMOKE BARRIER FROM ANY POINT IN A ROOM SHALL NOT EXCEED 200 FEET.
   d. IBC-408.8.4: SMOKE-TIGHT DOORS - DOORS IN OPENINGS OF THE WALLS SEPARATING THE DAYROOM FROM CELLS SHALL BE SUBSTANTIAL DOORS AND CONSTRUCTED TO RESIST THE PASSAGE OF SMOKE. LATCHES AND DOOR CLOSURES ARE NOT REQUIRED ON CELL DOORS.
   e. IBC-408.9: WINDOWLESS BUILDING - THE NEW HOUSING ARE NOT CONSIDERED "WINDOWLESS". THE NEW HOUSING AREAS ARE PROVIDED WITH ELECTRICALLY OPERABLE ROOF WINDOWS (SKYLIGHTS). AN ENGINEERED SMOKE CONTROL SYSTEM IS NOT REQUIRED. AN ADDITIONAL SAFETY FEATURE HAS BEEN ADDED TO THE BUILDING BY TYING THE OPENING OF THE ROOF WINDOWS INTO THE FIRE ALARM SYSTEM SO THAT IT IS AUTOMATIC UPON SMOKE DETECTION.

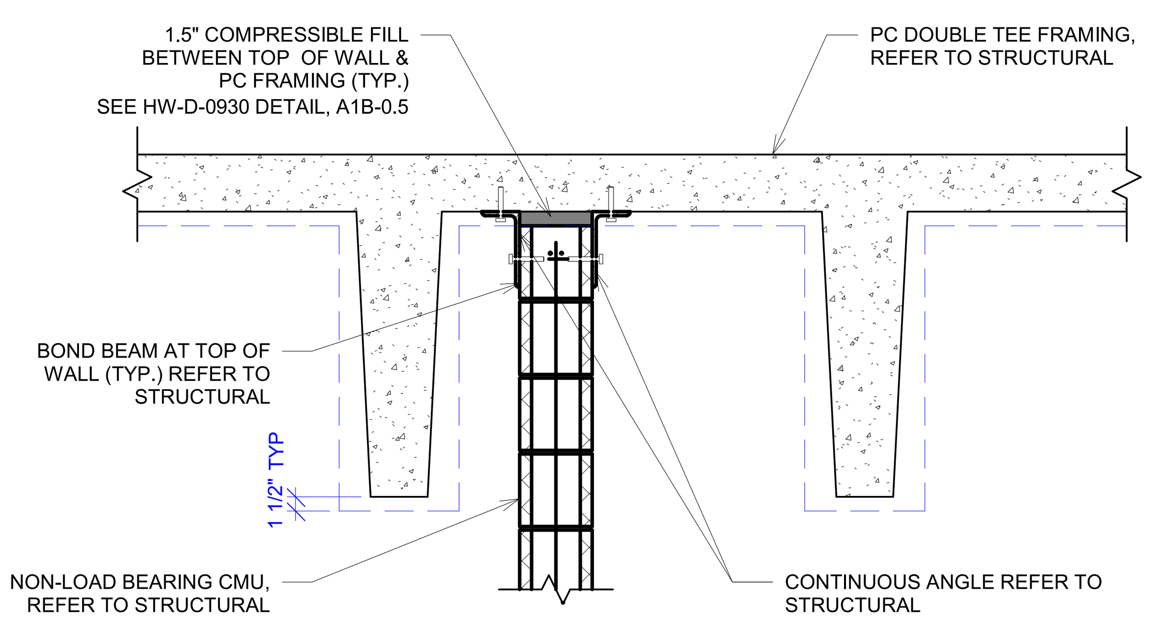

NOTE: WHERE NON-LOAD BEARING CMU WALL RUNS PERPENDICULAR TO DOUBLE TEE FRAMING. G.C. TO PROVIDE THE SAME ANGLE CONNECTION DETAILED ABOVE. G.C. TO NOTCH THE TOP OF THE NON-LOAD BEARING CMU WALL AROUND PRECAST ELEMENTS AS REQUIRED
(SEE DASHED LINE SHOWN IN BLUE)

2 CMU WALL AT PC DBL. TEE CONN. DETAIL
3/4" = 1'-0"

Wall Opening Protective Materials (CLIV, CLIV7)

CP617 / CP617L

Classified by Underwriters Laboratories, Inc. to UL 263 and CAN/ULC-S101

CP 617 Firestop Putty Pads, for use with max 4 by 4 by max 2-1/8 in. flush device UL Listed Metallic Outlet Boxes installed with steel cover plates in 1 and 2 hr. fire rated gypsum wallboard wall assemblies framed with min 3-1/2 in. deep wood or steel studs and constructed as specified in the individual U300, U400 or V400 Series Wall and Partition Designs in the Fire Resistance Directory. Min 1/8 in. thick moldable putty pads are to be installed to completely cover the exterior surfaces of the outlet box (except for the side of the outlet box against the stud) and completely seal against the stud within the stud cavity. When moldable putty pad outlet box protective material is used on boxes on both sides of wall as directed, the horizontal separation between outlet boxes on opposite sides of the wall may be less than 24 in. provided that the boxes are not installed back to back.

CP 617 Firestop Putty Pads, for use with max 4-11/16 by 4-11/16 by max 2-1/8 in., or max 4-3/8 by 4-7/8 by max 2-1/8 in., flush device UL Listed Metallic Outlet Boxes installed with steel cover plates for use in 1 hr fire rated V446 gypsum board/steel stud or U341 gypsum board/wood stud Wall and Partition Design No. in the Fire Resistance Directory. When U341 wall design is used, wall shall be sheathed with 5/8 in. gypsum board, and glass or mineral fiber batt insulation shall be installed in stud cavities in accordance with U341 design. Min 1/8 in. thick moldable putty pads are to be installed to completely cover the exterior surfaces of the outlet box (except for the side of the outlet box against the stud) and to completely seal against the box within the stud cavity. When moldable putty pad outlet box protective material is used on boxes on both sides of wall as directed, the horizontal separation between outlet boxes on opposite sides of the wall may be less than 24 in. and the boxes may be installed back-to-back.

CP 617 Firestop Putty Pads, for use with max 4-11/16 by 4-11/16 by max 2-1/8 in. flush device UL Listed Metallic Outlet Boxes installed with steel cover plates for use in 1 and 2 hr fire rated gypsum board wall assemblies framed with min 3-1/2 in. deep wood or steel studs and constructed of the materials and in the manner specified in the individual U300, U400 or V400 Series Wall and Partition Designs in the Fire Resistance Directory. Min 0.8 pcf density fiberglass batt insulation is to be installed within the wall cavity required for 1 hr fire rated wall assemblies and optional in 2 hr fire rated gypsum wallboard assemblies. Min 1/8 in. thick moldable putty pads are to be installed to completely cover the exterior surfaces of the outlet box (except for the side of the outlet box against the stud) and to completely seal against the box within the stud cavity. When moldable putty pad outlet box protective material is used on boxes on both sides of wall as directed, the horizontal separation between outlet boxes on opposite sides of the wall may be less than 24 in. provided that the boxes are not installed back-to-back.

CP 617 Firestop Putty Pads, for use with max 4 by 3-3/4 by 3 in. deep UL Listed Nonmetallic Outlet Boxes manufactured by Carlon Electrical Products, made from polyvinyl chloride, and bearing a 2 hr rating under the "Outlet Boxes and Fittings Classification for Fire Resistance" category in the Fire Resistance Directory. Putty pads and boxes for use in 1 and 2 hr fire rated gypsum wallboard assemblies, framed with min 3-1/2 in. deep wood studs and constructed as specified in the individual U300 Series Wall and Partition Designs in the Fire Resistance Directory. Outlet box secured to wood stud by means of two nailing tabs supplied with the outlet box. Min 1/8 in. thick moldable putty pads are to be installed to completely cover the exterior surfaces of the outlet box (except for the side of the outlet box against the stud) including the nailing tab and completely seal against the stud within the stud cavity. Outlet boxes installed with steel or plastic cover plates. When moldable putty pad outlet box protective material is used on boxes on both sides of wall as directed, the horizontal separation between boxes on opposite sides of the wall may be less than 24 in. provided that the boxes are not installed back to back.

CP 617 Firestop Putty Pads, for use with max 4 by 4 by 2-7/8 in. deep UL Listed Nonmetallic Outlet Boxes manufactured by Carlon Electrical Products, made from polyvinyl chloride, and bearing a 2 hr rating under the "Outlet Boxes and Fittings Classification for Fire Resistance" category in the Fire Resistance Directory. Putty pads and boxes for use in the 1 hr fire rated V446 gypsum board/steel stud or U341 gypsum board/wood stud Wall and Partition Design in the Fire Resistance Directory. When U341 wall design is used, wall shall be sheathed with 5/8 in. gypsum board, and glass or mineral fiber batt insulation shall be installed in stud cavities in accordance with U341 design. Outlet box secured to steel stud by means of fastening tab supplied with the outlet box. Min 1/8 in. thick moldable putty pads are to be installed to completely cover the exterior surfaces of the outlet box (except for the side of the outlet box against the stud) including the tab and completely seal against the stud within the stud cavity. Outlet boxes installed with steel or plastic cover plates. When moldable putty pad outlet box protective material is used on boxes on both sides of wall as directed, the horizontal separation between boxes on opposite sides of the wall may be less than 24 in. and the boxes may be installed back to back.

Hilti Firestop Systems

Reproduced by HILTI, Inc. Courtesy of Underwriters Laboratories, Inc. August 20, 2010

Page: 1 of 3

Wall Opening Protective Materials (CLIV, CLIV7)

CP617 / CP617L

Classified by Underwriters Laboratories, Inc. to UL 263 and CAN/ULC-S101

CP 617 Firestop Putty Pads, for use with max 2-1/4 by 3-3/4 by 2-3/4 in. deep UL Listed Nonmetallic Outlet Boxes manufactured by Pass and Seymore, Inc., and bearing a 2 hr rating under the "Outlet Boxes and Fittings Classification for Fire Resistance" category in the Fire Resistance Directory. Putty pads and boxes for use in 1 and 2 hr fire rated gypsum wallboard assemblies, framed with min 3-1/2 in. deep wood studs and constructed as specified in the individual U300 Series Wall and Partition Designs in the Fire Resistance Directory. Outlet box secured to wood stud by means of two nailing tabs supplied with the outlet box. Min 1/8 in. thick moldable putty pads are to be installed to completely cover the exterior surfaces of the outlet box (except for the side of the outlet box against the stud) including the nailing tab and completely seal against the stud within the stud cavity. Outlet boxes installed with steel or plastic cover plates. When moldable putty pad outlet box protective material is used on boxes on both sides of wall as directed, the horizontal separation between boxes on opposite sides of the wall may be less than 24 in. provided that the boxes are not installed back to back .

CP 617 Firestop Putty Pads, for use with max 4 by 3-3/4 by 3 in. deep UL Listed Nonmetallic Outlet Boxes manufactured by Allied Molded Products, Inc., made from fiber reinforced thermoplastic and bearing a 2 hr rating under the "Outlet Boxes and Fittings Classification for Fire Resistance" category in the Fire Resistance Directory. Putty pads and boxes for use in 1 hr fire rated gypsum wallboard assemblies, framed with min 3-1/2 in. deep wood studs and constructed as specified in the individual U300 Series Wall and Partition Designs in the Fire Resistance Directory. Outlet box secured to wood stud by means of two nailing tabs supplied with the outlet box. Min 1/8 in. thick moldable putty pads are to be installed to completely cover the exterior surfaces of the outlet box (except for the side of the outlet box against the stud) including the nailing tab and completely seal against the stud within the stud cavity. Outlet boxes installed with plastic cover plates. When moldable putty pad outlet box protective material is used on boxes on both sides of wall as directed, the horizontal separation between boxes on opposite sides of the wall may be less than 24 in. provided that the boxes are not installed back to back .

CP 617 Firestop Putty Pads , for use with max 4 by 4 in. by 1-½ in. deep flush device UL Listed Metallic Outlet Boxes installed with steel cover plates in 1 hr. fire rated gypsum wallboard wall assemblies framed with min 3-1/2 in. deep wood or steel studs and constructed as specified in the individual U300, U400 or V400 Series Wall and Partition Designs in the Fire Resistance Directory. Min 1/8 in. thick moldable putty pads are to be installed to completely cover the exterior surfaces of the outlet box (except for the side of the outlet box against the stud) and completely seal against the stud within the stud cavity. The boxes are installed back to back with 5 in. by 4 in. UL Classified fire block, FS 657 or CP 657 installed in the cavity between the two boxes.

CP 617 Firestop Putty Pads, for use with max 14 by 4 by max 2-1/2 in. flush device UL Listed Metallic Outlet Boxes installed with steel cover plates in 1 and 2 hr. fire rated gypsum board wall assemblies framed with min 5-1/2 in. deep wood or steel studs for 2 hr fire rated walls and min 3-1/2 in. deep wood or steel studs for 1 hr fire rated walls. Walls constructed as specified in the individual U300, U400 or V400 Series Wall and Partition Designs in the Fire Resistance Directory. Stud cavity insulation is required and shall consist of min 5-1/2 in. (2 hr rated walls) or min 3-1/2 in. (1 hr rated walls) thick fiberglass (min 0.8 pcf) or mineral fiber (min 4 pcf). Min 1/8 in. thick moldable putty pads are to be installed to completely cover the exterior surfaces of the outlet box (except for the side of the outlet box against the stud) and conduit fittings at exterior of box and completely seal against the stud within the stud cavity. When boxes are interconnected by means of electrical metallic tube (EMT) or conduit, a ball of putty pad material shall be used to completely plug the open end of each EMT or conduit within the box. When moldable putty pad outlet box protective material is used on boxes on both sides of wall as directed, the horizontal separation between outlet boxes on opposite sides of the wall may be less than 24 in. provided that the boxes are not installed back to back.

Hilti Firestop Systems

Reproduced by HILTI, Inc. Courtesy of Underwriters Laboratories, Inc. August 20, 2010

Page: 2 of 3

Wall Opening Protective Materials (CLIV)

CP617 / CP617L

Classified by Underwriters Laboratories, Inc. to UL 263 and CAN/ULC-S101

CP 617 Firestop Putty Pads, for use with max 4-11/16 by 4-11/16 by max 2-1/8 in. flush device UL Listed Metallic Outlet Boxes installed with steel or plastic cover plates for use in 1 and 2 hr fire rated gypsum board wall assemblies framed with min 5-1/2 in. deep steel studs and constructed of the materials and in the manner specified in the individual U400 or V400 Series Wall and Partition Designs in the Fire Resistance Directory. Min 1/8 in. thick moldable putty pads are to be installed to completely cover the exterior surfaces of the outlet box (except for the side of the outlet box against the stud) and conduit fittings at exterior of box and to completely seal against the stud within the stud cavity. When boxes are interconnected by means of electrical metallic tube (EMT) or conduit, a ball of putty pad material shall be used to completely plug the open end of each EMT or conduit within the outlet boxes. Metallic outlet boxes may be provided with steel attachment brackets which offset box min 1/4 in. from stud. When steel attachment brackets are used, putty pad to be affixed to the back and all four sides of the box. When moldable putty pad outlet box protective material is used on boxes on both sides of wall as directed, the horizontal separation between outlet boxes on opposite sides of the wall may be less than 24 in. provided that the boxes are not installed back-to-back.

CP 617 Firestop Putty Pads and HILTI Firestop Box Inserts for use with maximum 4 by 4 by 1-1/2 in. (102 by 102 by 38 mm) deep flush device UL Listed Metallic Outlet Boxes installed with steel mud rings and with steel or plastic faceplates in 1 or 2 hr fire rated gypsum board wall assemblies constructed with min 3-1/2 in. (89 mm) wide wood or steel studs. When both protective materials are used with outlet boxes on both sides of the wall as directed, the boxes may be installed back-to-back provided that the backs of the boxes are minimum 1/2 in. (13 mm) apart and provided that the boxes are not interconnected. Installation shall comply with the National Electrical Code (NFPA 70). Min 1/8 in. (3.2 mm) thick moldable putty pads are to be installed to completely cover the exterior surfaces of the outlet box (except for the side of the outlet box against the stud) and to completely seal against the stud within the stud cavity. Adjoining pieces of moldable putty pads to be overlapped approx 1/2 in. (13 mm) at the seam. An additional 1/8 in. (3.2 mm) thickness of putty to be formed around the connector securing the end of each Type MC cable, electrical metallic tube (EMT) or conduit to the box. An insert pad shall be installed to completely cover the back inside surface of each outlet box.

Hilti Firestop Systems

Reproduced by HILTI, Inc. Courtesy of Underwriters Laboratories, Inc. August 20, 2010

Page: 3 of 3

System No. W-J-1028

WJ 1028

Classified by Underwriters Laboratories, Inc. to UL 1479 and CAN/ULC-S115

ANSI/UL1479 (ASTM E814)	CAN/ULC S115
F Rating — 1 & 2 Hr (See Item 3)	F Rating — 1 & 2 Hr (See Item 3)
T Rating — 0 Hr	FT Rating — 0 Hr
	FH Rating — 1 & 2 Hr (See Item 3)
	FTH Rating — 0 Hr

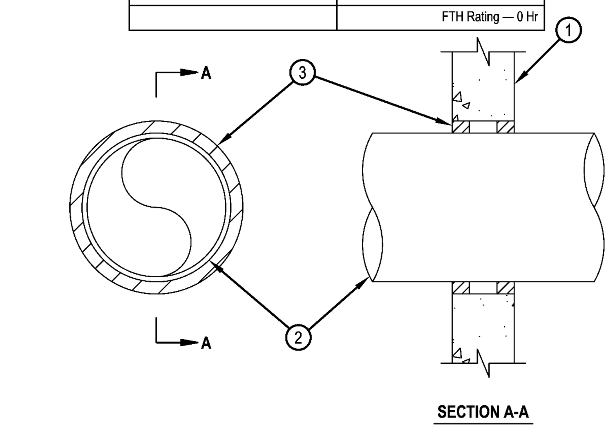

1. Wall Assembly — Min 2-1/2 in. (64 mm) thick reinforced lightweight or normal weight (100-150 pcf or 1600-2400 kg/m3) concrete. Wall may also be constructed of any UL Classified Concrete Blocks*. Max diam of opening is 12-1/2 in. (318 mm).
   See Concrete Blocks (CAZT) category in the Fire Resistance Directory for names of manufacturers.
2. Through-Penetrants — One metallic pipe, conduit or tubing to be centered within the firestop system. The annular space between pipes, conduit or tubing and periphery of opening shall be min 1/2 in. (13 mm) to max 7/8 in. (22 mm). Pipe, conduit or tubing to be rigidly supported on both sides of wall assembly. The following types and sizes of metallic pipes, conduits or tubing may be used:
   A. Steel Pipe — Nom 10 in. (254 mm) diam (or smaller) Schedule 10 (or heavier) steel pipe.
   B. Conduit — Nom 4 in. (102 mm) diam (or smaller) steel electrical metallic tubing or nom 6 in. (152 mm) diam (or smaller) steel conduit.
   C. Copper Tubing — Nom 4 in. (102 mm) diam (or smaller) Type L (or heavier) copper tubing.
   D. Copper Pipe — Nom 4 in. (102 mm) diam (or smaller) Regular (or heavier) copper pipe.
3. Fill, Void or Cavity Material* — Sealant — Min 5/8 in. (16 mm) or 1-1/4 in. (32 mm) thickness of fill material applied within the annulus, flush with both surfaces of wall for 1 hr and 2 hr fire-rated walls, respectively.
   HILTI CONSTRUCTION CHEMICALS, DIV OF HILTI INC — CP 601s, CFS-S-SIL GG or FS-ONE Sealant or FS-ONE MAX Intumescent Sealant.

* Indicates such products shall bear the UL or cUL Certification Mark for jurisdictions employing the UL or cUL Certification (such as Canada), respectively.

Hilti Firestop Systems

Reproduced by HILTI, Inc. Courtesy of Underwriters Laboratories, Inc. January 21, 2015

System No. C-AJ-1276

CAJ 1276

Classified by Underwriters Laboratories, Inc. to UL 1479 and CAN/ULC-S115

ANSI/UL1479 (ASTM E814)	CAN/ULC S115
F Rating — 3 Hr	F Rating — 3 Hr
T Rating — 0 Hr	FT Rating — 0 Hr
	FH Rating — 3 Hr
	FTH Rating — 0 Hr

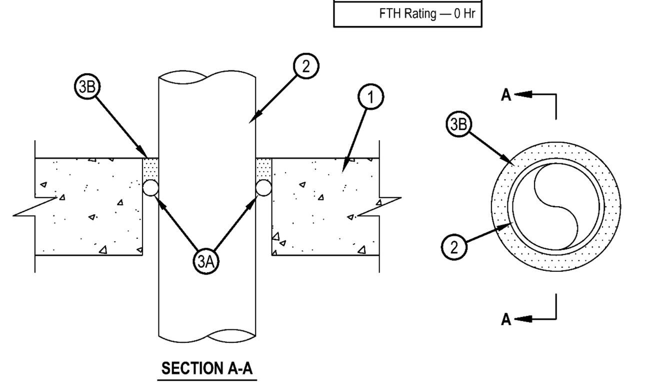

1. Floor or Wall Assembly — Min 4-1/2 in. (114 mm) thick reinforced lightweight or normal weight (100-150 pcf or 1600-2400 kg/m3) concrete. Wall may also be constructed of any UL Classified Concrete Blocks*. Max diam of opening is 6 in. (152 mm).
   See Concrete Blocks (CAZT) category in the Fire Resistance Directory for names of manufacturers.
2. Through Penetrants — One metallic pipe, conduit or tubing to be centered within the firestop system. A nom annular space of 3/4 in. (19 mm) is required within the firestop system. Pipe, conduit or tubing to be rigidly supported on both sides of floor or wall assembly. The following types and sizes of metallic pipes, conduits or tubing may be used:
   A. Steel Pipe — Nom 4 in. (102 mm) diam (or smaller) Schedule 10 (or heavier) steel pipe.
   B. Conduit — Nom 4 in. (102 mm) diam (or smaller) steel electrical metallic tubing or steel conduit.
3. Firestop System — The firestop system shall consist of the following:
   A. Packing or Forming Materials — Optional — One of the following packing or forming materials may be used:
   A1. Foam Backer Rod — Foam backer rod tightly packed into the opening as a permanent form. Packing material to be recessed from the top surface of floor or both surfaces of wall as required to accommodate the required thickness of putty.
   A2. Mineral Wool Batt Insulation — Min 4 pcf (64 kg/m3), tightly packed into the opening as a permanent form. Packing material to be recessed from the top surface of floor or both surfaces of wall as required to accommodate the required thickness of putty.
   A3. Forming Material* — Forming material to be foamed into the opening as a permanent form. Forming material to be recessed from the top surface of floor or both surfaces of wall as required to accommodate the required thickness of putty.
   HILTI CONSTRUCTION CHEMICALS, DIV OF HILTI INC — CF812 or CF-AS CJP Foam Sealant
   B. Fill, Void or Cavity Material* — Putty — Min 1 in. (25 mm) thickness of putty applied within the annulus, flush with top surface of floor or with both surfaces of wall.
   HILTI CONSTRUCTION CHEMICALS, DIV OF HILTI INC — CP 618 Firestop Putty Stick

*Bearing the UL Classification Mark

Hilti Firestop Systems

Reproduced by HILTI, Inc. Courtesy of Underwriters Laboratories, Inc. April 20, 2012

System No. C-AJ-3210

CAJ 3210

Classified by Underwriters Laboratories, Inc. to UL 1479 and CAN/ULC-S115

ANSI/UL1479 (ASTM E814)	CAN/ULC S115
F Rating — 3 Hr	F Rating — 3 Hr
T Rating — 0 Hr	FT Rating — 0 Hr
	FH Rating — 3 Hr
	FTH Rating — 0 Hr

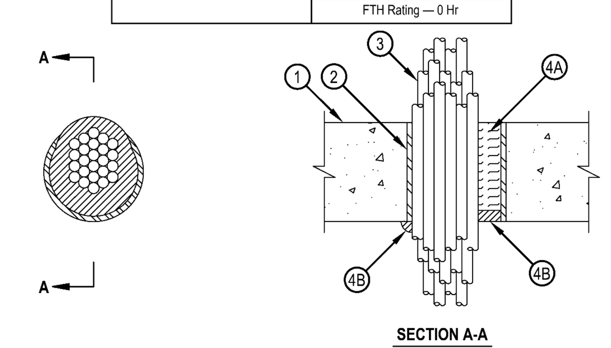

1. Floor or Wall Assembly -- Min 4-1/2 in. thick reinforced lightweight or normal weight (100-150 pcf) concrete floor or 5 in. thick reinforced lightweight or normal weight (100-150 pcf) concrete wall. Wall may also be constructed of any UL Classified Concrete Blocks*. Max diameter of opening is 4 in.
   See Concrete Blocks category in the Fire Resistance Directory for names of manufacturers.
2. Steel Sleeve -- (Optional) - Nom 4 in. diam (or smaller) Schedule 10 (or heavier) steel sleeve cast or grouted into floor or wall assembly, flush with floor or wall surfaces.
3. Cables -- Aggregate cross-sectional area of bundled cables in opening to be max 60 percent of the cross-sectional area of the opening. The annular space between the cable bundle and the periphery of the opening or sleeve to be min 0 in. (point contact) to max 1 in. Cables to be rigidly supported on both sides of the floor or wall assembly. Any combination of the following types and sizes of cables may be used:
   A. Max 300 pair No. 24 AWG telephone cable with polyvinyl chloride (PVC) insulation and jacket.
   B. Max 750 kcmil single copper connector power cable with thermoplastic insulation and PVC jacket.
   C. Max 7/C No. 12 AWG multiconductor power and control cable with PVC or cross-linked polyethylene (XLPE) insulation and PVC jacket.
   D. Multiple fiber optical communication cable jacketed with PVC and having a max outside diameter of 1/2 in.
   E. Max 3/C No. 12 AWG with bare aluminum ground, PVC insulated steel Metal-Clad cable.
   F. Max 1 in. diam metal clad TEK cable with PVC jacket.
4. Firestop System -- The firestop system shall consist of the following:
   A Packing Materials -- Min 4 in. thickness of min 4 pcf mineral wool batt insulation firmly packed into opening as a permanent form. Packing material to be recessed from bottom surface of floor or both sides of wall as required to accommodate the required thickness of fill material.
   B. Fill, Void or Cavity Materials* - Putty -- Min ½ in. thickness of fill material applied within the annulus, flush with bottom surface of floor and both surfaces of wall. At point contact location between penetrant and sleeve or concrete, min ½ in. diam bead of fill material applied at bundle/sleeve or bundle/concrete interface on bottom surface of floor or both surfaces of wall.
   HILTI CONSTRUCTION CHEMICALS, DIV OF HILTI INC -- CP618 Firestop Putty Stick

*Bearing the UL Classification Mark

Hilti Firestop Systems

Reproduced by HILTI, Inc. Courtesy of Underwriters Laboratories, Inc. December 04, 2013

System No. C-AJ-1140

CAJ 1140

Classified by Underwriters Laboratories, Inc. to UL 1479 and CAN/ULC-S115

F Rating -- 3 Hr
T Rating -- 0 Hr

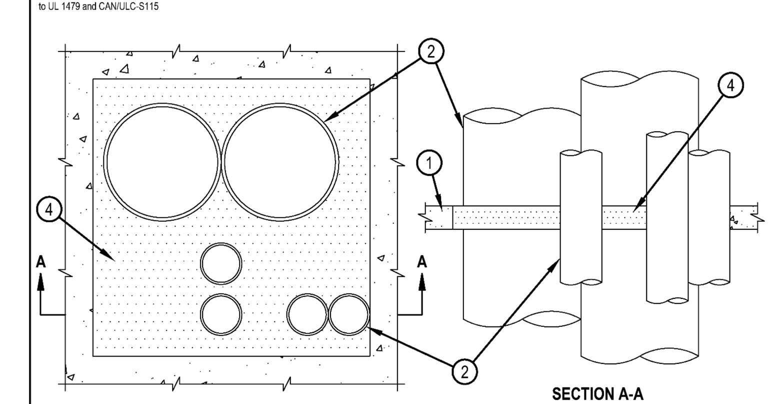

1. Floor or Wall Assembly — Min 2-1/2 in. (63 mm) thick reinforced lightweight or normal weight (100-150 pcf or1600-2400 kg/m3) concrete. Wall may also be constructed of any UL Classified Concrete Blocks *. Max area of opening is 1024 sq in. (.66 sq m) with max dimension of 32 in. (81.3 cm).
   See Concrete Blocks (CAZT) category in the Fire Resistance Directory for names of manufacturers.
2. Through Penetrants — One or more penetrants to be installed in opening. Min clearance between pipes, conduits or tubing is 0 in. (0 mm). (point contact). Min clearance between pipes, conduit or tubing and periphery of through opening is 1 in. (25 mm). Min clearance between pipes, conduit or tubing and periphery of any single surface of through opening is 0 in. (point contact). Pipe, conduit or tubing to be rigidly supported on both sides of floor or wall assembly. The following types and sizes of metallic pipes, conduits or tubing may be used:
   A. Steel Pipe — Nom 12 in. (305 mm) diam (or smaller) Schedule 10 (or heavier) steel pipe.
   B. Conduit — Nom 4 in. (102 mm) diam (or smaller) steel electrical metallic tubing or steel conduit.
   C. Copper Tubing — Nom 4 in. (102 mm) diam (or smaller) Type L (or heavier) copper tubing.
   D. Copper Pipe — Nom 4 in. (102 mm) diam (or smaller) Regular (or heavier) copper pipe.
3. Forms — (Not Shown) — Used as a form to prevent leakage of fill material during installation. Forms to be a rigid sheet material, cut to fit the contour of the penetrating item and positioned as required to accommodate the required thickness of fill material. Forms may be removed after fill material has cured.
4. Firestop System — The details of the firestop system shall be as follows:
   A. Packing Material — (Optional, Not Shown) - For floors greater than 2-1/2 in. (63 mm) thick, mineral wool batt insulation firmly packed into opening as a permanent or temporary form and recessed from the top surface of floor to accommodate the required thickness of the fill material.
   B. Fill, Void or Cavity Material* — Mortar — Min 2-1/2 in. (63 mm) thickness of fill material applied within the annulus. Fill material is mixed at a rate of 2.5 parts dry mix to one part water by weight in accordance with the installation instructions supplied with fill material.
   HILTI CONSTRUCTION CHEMICALS, DIV OF
   HILTI INC — Type CP636 or CP637

*Bearing the UL Classification Mark

Hilti Firestop Systems

Reproduced by HILTI, Inc. Courtesy of Underwriters Laboratories, Inc. March 19, 2012

System No. F-A-1029

FA 1029

Classified by Underwriters Laboratories, Inc. to UL 1479 and CAN/ULC-S115

ANSI/UL1479 (ASTM E814)	CAN/ULC S115
F Rating — 2 Hr	F Rating — 2 Hr
T Rating — 0 Hr	FT Rating — 0 Hr
	FH Rating — 2 Hr
	FTH Rating — 0 Hr

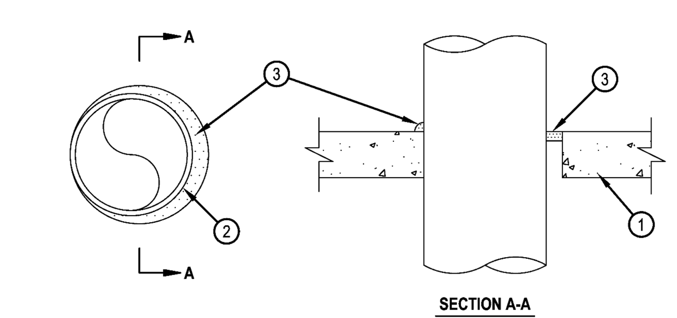

1. Floor Assembly — Min 2-1/2 in. (64 mm) thick reinforced lightweight or normal weight (100-150 pcf or 1600-2400 kg/m3) concrete. Max diam of opening is 30-7/8 in. (784 mm).
   1A. Floor Assembly — (Optional — Not Shown) — The fire rated unprotected concrete and steel floor assembly shall be constructed of the materials and in the manner specified in the individual D900 Series designs in the UL Fire Resistance Directory and as summariezed below:
   A. Concrete — Min 2-1/2 in. (64 mm) thick reinforced lightweight on normal weight (100-150 pcf or 1600-2400 kg/m3) concrete.
   B. Steel Floor and Form Units* — Composite or non-composite max 3 in. (76 mm) deep galv steel fluted units as specified in the individual Floor-Ceiling Design.
2. Through-Penetrant — One metallic pipe, conduit or tubing to be installed either concentrically or eccentrically within the firestop system. Pipe, conduit or tubing to be rigidly supported on both sides of floor assembly. The annular space between pipe, conduit or tubing and the periphery of the opening shall be min 0 in. (point contact) to max 7/8 in. (22 mm). The following types of pipe, conduit or tubing may be used:
   Steel Pipe — Nom 30 in. (762 mm) diam (or smaller) Schedule 10 (or heavier) steel pipe.
   Iron Pipe — Nom 30 in. (762 mm) diam (or smaller) cast or ductile iron pipe.
   Conduit — Nom 6 in. (152 mm) diam (or smaller) rigid steel conduit.
   Conduit — Nom 4 in. (102 mm) diam (or smaller) steel electrical metallic tubing (EMT).
   Copper Tubing — Nom 6 in. (152 mm) diam (or smaller) Type L (or heavier) copper tubing.
   Copper Pipe — Nom 6 in. (152 mm) diam (or smaller) Regular (or heavier) copper pipe.
3. Fill, Void or Cavity Material* — Sealant — Min 1/2 in. (13 mm) thickness of fill material applied within the annulus, flush with top surface of floor. At point contact, a min 1/4 in. (6 mm) diam bead of fill material shall be applied at the concrete/pipe interface on the top surface of floor.
   HILTI CONSTRUCTION CHEMICALS, DIV OF HILTI INC — FS-ONE Sealant or FS-ONE MAX Intumescent Sealant.

* Indicates such products shall bear the UL or cUL Certification Mark for jurisdictions employing the UL or cUL Certification (such as Canada), respectively.

Hilti Firestop Systems

Reproduced by HILTI, Inc. Courtesy of Underwriters Laboratories, Inc. January 15, 2015

System No. C-AJ-2647

CAJ 2647

Classified by Underwriters Laboratories, Inc. to UL 1479

F Rating - 2 Hr
T Rating - 1/2 Hr
L Rating at Ambient — Less Than 1 CFM/sq ft
L Rating at 400 F — Less Than 1 CFM/sq ft

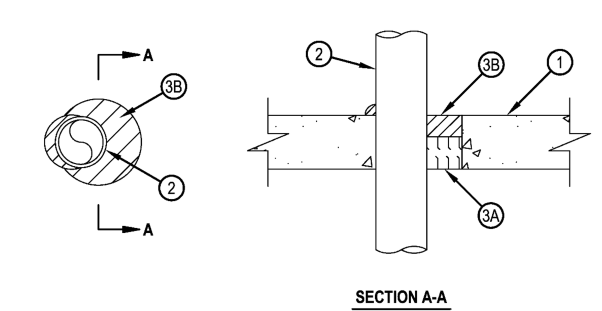

1. Floor or Wall Assembly — Min 2-1/2 in. (64 mm) thick reinforced lightweight or normal weight (100-150 pcf or 1600-2400 kg/m3) concrete floor or min 3-1/2 in. (89 mm) thick reinforced lightweight or normal weight (100-150 pcf or 1600-2400 kg/m3) concrete wall. Wall may also be constructed of any UL Classified Concrete Blocks*. Max diam of opening is 4 in. (102 mm).
   See Concrete Blocks (CAZT) category in the Fire Resistance Directory for names of manufacturers.
   1A. Steel Deck/Floor Assembly — (Not Shown) — As an alternate to Item 1, the floor assembly may consist of a min 2 hr fire rated fluted steel deck/concrete floor assembly. The floor assembly shall be constructed of the materials and in the manner described in the individual Floor-Ceiling Design in the UL Fire Resistance Directory and shall include the following construction features:
   A. Steel Floor and Form Units — Min 1-1/2 in. (38 mm) deep galv fluted units.
   B. Concrete — Min 2-1/2 in. (64 mm) thick reinforced lightweight or normal weight (100-150 pcf or 1600-2400 kg/m3) concrete, as measured from the top plane of the floor units.
2. Through-Penetrant — One nonmetallic pipe, conduit or tubing to be installed either concentrically or eccentrically within the firestop system. The annular space between the penetrant and periphery of opening shall be min 0 in. (point contact) to max 1-5/8 in. (41 mm). Penetrant to be rigidly supported on both sides of floor or wall assembly. The following types and sizes of penetrants may be used:
   A. Polyvinyl Chloride (PVC) Pipe — Nom 2 in. (51 mm) diam (or smaller) Schedule 40 solid or cellular core PVC pipe for use in closed (process or supply) piping systems.
   B. Chlorinated Polyvinyl Chloride (CPVC) Pipe — Nom 2 in. (51 mm) diam (or smaller) SDR 13.5 CPVC pipe for use in closed (process or supply) piping systems.
   C. Rigid Nonmetallic Conduit+ — Nom 2 in. (51 mm) diam (or smaller) Schedule 40 PVC conduit installed in accordance with the National Electrical Code (NFPA No. 70).
   D. Electrical Nonmetallic Tubing (ENT)+ — Nom 2 in. (51 mm) diam (or smaller) electrical nonmetallic tubing. Tubing to be installed in accordance with the National Electrical Code (NFPA No.70).
   See Electrical Nonmetallic Tubing (FKHU) category in the Electrical Construction Material Directory for names of manufacturers.
   E. Crosslinked Polyethylene (PEX) Tubing — Nom 1 in. (25 mm) diam (or smaller) SDR 9 PEX tubing for use in closed (process or supply) piping systems.

Hilti Firestop Systems

Reproduced by HILTI, Inc. Courtesy of Underwriters Laboratories, Inc. January 13, 2015

Page: 1 of 2

System No. C-AJ-2647

CAJ 2647

Classified by Underwriters Laboratories, Inc. to UL 1479

F Rating - 2 Hr
T Rating - 1/2 Hr
L Rating at Ambient — Less Than 1 CFM/sq ft
L Rating at 400 F — Less Than 1 CFM/sq ft

3. Firestop System — The firestop system shall consist of the following:
   A. Packing Material — Min 1-1/2 in. (38 mm) thickness of min 4 pcf (64 kg/m3) mineral wool batt insulation firmly packed into opening as a permanent form. Packing material to be recessed from top surface of floor or from both surfaces of wall to accommodate the required thickness of fill material.
   B. Fill, Void or Cavity Material* — Sealant — Min 1 in. (25 mm) thickness of fill material applied within the annulus, flush with the top surface of floor or both surfaces of wall. At the point of contact location between pipe and concrete, a min 1/2 in. diam bead of fill material shall be applied at the concrete/pipe interface on the top surface of floor and on both surfaces of wall.
   HILTI CONSTRUCTION CHEMICALS, DIV OF HILTI INC — FS-ONE Sealant or FS-ONE MAX Intumescent Sealant.

* Indicates such products shall bear the UL or cUL Certification Mark for jurisdictions employing the UL or cUL Certification (such as Canada), respectively.

+Bearing the UL Listing Mark

Hilti Firestop Systems

Reproduced by HILTI, Inc. Courtesy of Underwriters Laboratories, Inc. January 13, 2015

Page: 2 of 2

System No. HW-D-0930

HWD 0930

Classified by Underwriters Laboratories, Inc. to UL 2079 and CAN/ULC-S115

ANSI/UL2079	CAN/ULC S115
Assembly Rating — 2 Hr	F Rating — 2 Hr
Nominal Joint Width - 2 in.	FT Rating — 2 Hr
Class II Movement Capabilities — 12.5% Compression or Extension	FH Rating — 2 Hr
L Rating at Ambient — Less than 1 CFM/Lin Ft	FTH Rating — 2 Hr
L Rating at 400°F — Less than 1 CFM/Lin Ft	Nominal Joint Width – 51 mm
	Class II Movement Capabilities — 12.5% Compression or Extension
	L Rating at Ambient — Less than 5.1 L/s/m2
	L Rating at 400°F — Less than 5.1 L/s/m2

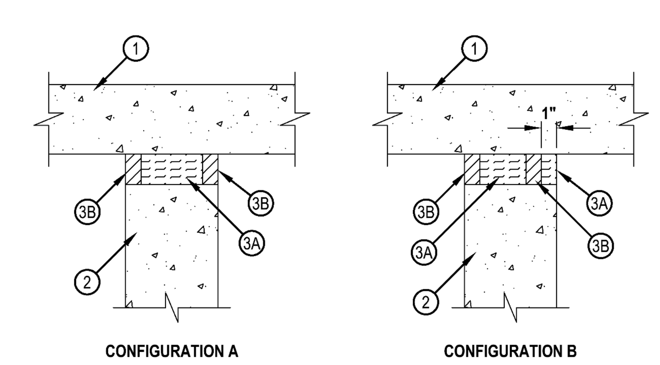

Hilti Firestop Systems

Reproduced by HILTI, Inc. Courtesy of Underwriters Laboratories, Inc. May 05, 2021

Page: 1 of 2

System No. HW-D-0930

HWD 0930

1. Floor Assembly — Min 4-1/2 in. (114 mm) thick reinforced lightweight or normal weight (100-150 pcf or 1600-2400 kg/m3) structural concrete. Floor may also be constructed of any min 6 in. (152 mm) thick UL Classified hollow-core Precast Concrete Units*.
   See Precast Concrete Units (CFTV) category in the Fire Resistance Directory for names of manufacturers.
2. Wall Assembly — Min 4-1/2 in. (114 mm) thick reinforced lightweight or normal weight (100-150 pcf or 1600-2400 kg/m3) structural concrete. Wall may also be constructed of any UL Classified Concrete Blocks*.
   See Concrete Block (CAZT) category in the Fire Resistance Directory for names of manufacturers.
3. Joint System — Max width of joint (at time of installation of joint system) is 2 in. (51 mm). The joint system is designed to accommodate a max 12.5 percent compression or extension from its installed width. The joint system shall consist of the following:
   A. Forming Material* —Min 4 pcf (64 kg/m3) mineral wool batt insulation installed in joint opening as a permanent form. Pieces of batt cut to a min width as specified in Table below and installed edge-first into joint opening, parallel with joint direction, such that batt sections are compressed min 50 percent in thickness and such that the compressed batt sections are recessed from the both surfaces of the wall as required to accommodate the required thickness of fill material (Configuration A). Adjoining lengths of batt to be tightly-butted with butted seams spaced min 24 in. (610 mm) apart along the length of the joint. In walls with one side access as shown in Configuration B, min 1 in. (25 mm) width of Forming Material shall first be installed within joint as described above approximately flush with inaccessible side of wall, followed by the Sealant (Item 3B) and Forming Material (Item 3A) as specified in the Table below.
   INDUSTRIAL INSULATION GROUP L L C — MinWool-1200 Safing
   JOHNS MANVILLE — Safing
   ROCKWOOL MALAYSIA SDN BHD — SAFE
   ROCKWOOL — SAFE
   THERMAFIBER INC — SAF
   B. Fill, Void or Cavity Material* — Sealant —Min thickness of fill material as specified in Table below to be applied within the joint, flush with both surfaces of wall (Configuration A). In walls with one side access as shown in Configuration B, sealant to be applied within the joint over the min 1 in. (25 mm) of Forming Material described in Item 3A, and additional sealant then installed within joint flush with accessible side of wall after the remaining Forming Material (Item 3A) is installed within joint, as specified in the Table below.
   HILTI CONSTRUCTION CHEMICALS, DIV OF HILTI INC — CP606 Flexible Firestop Sealant

Joint System Hourly Rating	Max Joint Width In. (mm)	Min Width of Forming Material (Item 2A) In. (mm)	Min Thickness of Sealant (Item 2B) In. (mm)
2	2 (51)	2 (51)	1/2 (13)
2	1 (25)	2.5 (64)	1/4 (6)

* Indicates such products shall bear the UL or cUL Certification Mark for jurisdictions employing the UL or cUL Certification (such as Canada), respectively.

Hilti Firestop Systems

Reproduced by HILTI, Inc. Courtesy of Underwriters Laboratories, Inc. May 05, 2021

Page: 2 of 2

LICENSED ARCHITECT
AR-986981
KYNDELL M. MADSEN
STATE OF IDAHO
2/24/25

DATE

PHASE 1 PART B FOR:
TWIN FALLS COUNTY - WRIGHT AVE JAIL
2515 Wright Ave, Twin Falls, ID 83301
FIRE ANALYSIS & PENETRATIONS

Laughlin Ricks Architecture
architecture/planning
134 3RD Ave East, * Twin Falls, Idaho 83301
(208) 736-8050

DATE: 2/24/25
KM Drawn
RCR Checked
#23029 PROJECT #

A1B-0.5

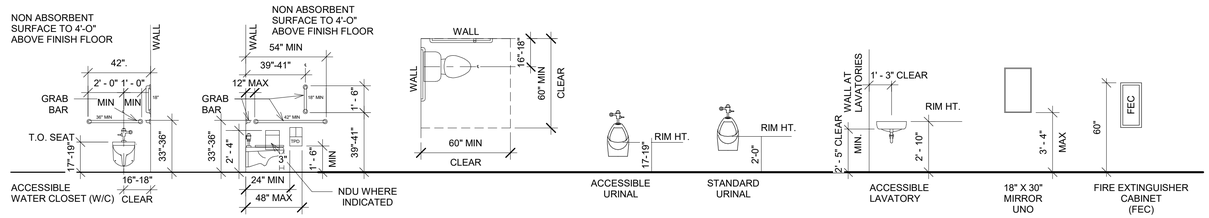

NOTE: AT RESTROOMS/TOILET ROOMS THE TOWEL, SOAP, AND SANITARY NAPKIN DISPENSERS ARE TO BE INSTALLED SO AS NOT TO EXCEED 40" AFF TO ANY OPERATING CONTROLS, RECEPTACLE, OR DISPENSER.

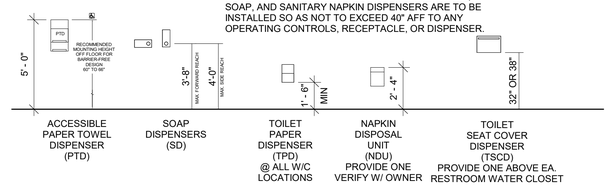

1. PROTECTION UNDER SINKS
606.6 EXPOSED PIPES AND SURFACES. WATER SUPPLY AND DRAINPIPES UNDER LAVATORIES AND SINKS SHALL BE INSULATED OR OTHERWISE CONFIGURED TO PROTECT AGAINST CONTACT. THERE SHALL BE NO SHARP OR ABRASIVE SURFACES UNDER LAVATORIES AND SINKS.

2. FLUSH CONTROLS
604.6 FLUSH CONTROLS. FLUSH CONTROLS SHALL BE HAND OPERATED OR AUTOMATIC. HAND OPERATED FLUSH CONTROLS SHALL BE LOCATED ON THE OPEN SIDE OF THE WATER CLOSET. EXCEPTION: IN AMBULATORY ACCESSIBLE COMPARTMENTS COMPLYING WITH SECTION 604.9, FLUSH CONTROLS SHALL BE PERMITTED TO BE LOCATED ON EITHER SIDE OF THE WATER CLOSET.

3. TOILET PAPER DISPENSER.
604.7 DISPENSERS. TOILET PAPER DISPENSERS SHALL COMPLY WITH SECTION 309.4 AND SHALL BE 7 INCHES (180 mm) MINIMUM AND 9 INCHES (230 mm) MAXIMUM IN FRONT OF THE WATER CLOSET MEASURED TO THE CENTERLINE OF THE DISPENSER. THE OUTLET OF THE DISPENSER SHALL BE 15 INCHES (380 mm) MINIMUM AND 48 INCHES (1220 mm) MAXIMUM ABOVE THE FLOOR, AND SHALL NOT BE LOCATED BEHIND THE GRAB BARS. DISPENCERS SHALL NOT BE OF A TYPE THAT CONTROL DELIVERY, OR DO NOT ALLOW CONTINUOUS PAPER FLOW.

NOTE: PER ICC A117 SECTION 604.5
EXCEPTION 2: IN DETENTION OR CORRECTION FACILITIES, GRAB BARS ARE NOT REQUIRED TO BE INSTALLED IN HOUSING OR HOLDING CELLS OR ROOMS THAT ARE SPECIFICALLY DESIGNED WITHOUT PROTRUSIONS FOR PURPOSES OF SUICIDE PREVENTION.

1 GENERAL- FIXTURE MOUNTING HEIGHTS PH 1 PART B
1/4" = 1'-0"

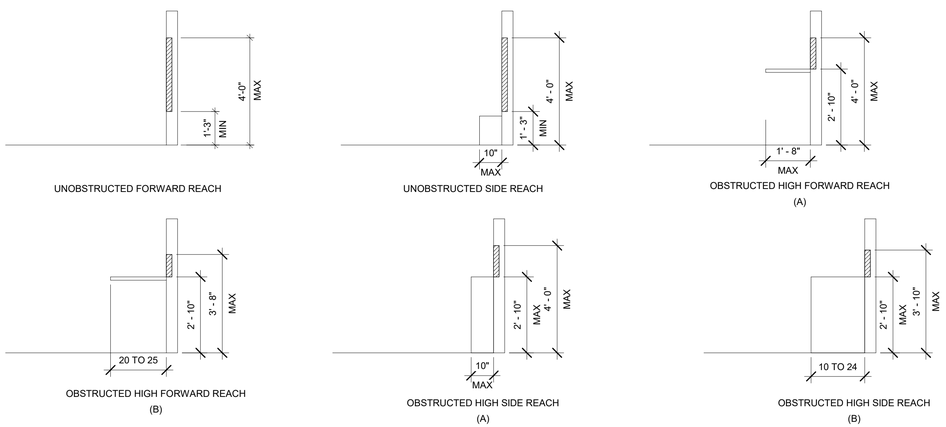

2 OPERABLE PARTS & REACH RANGES PH 1 PART B
3/8" = 1'-0"

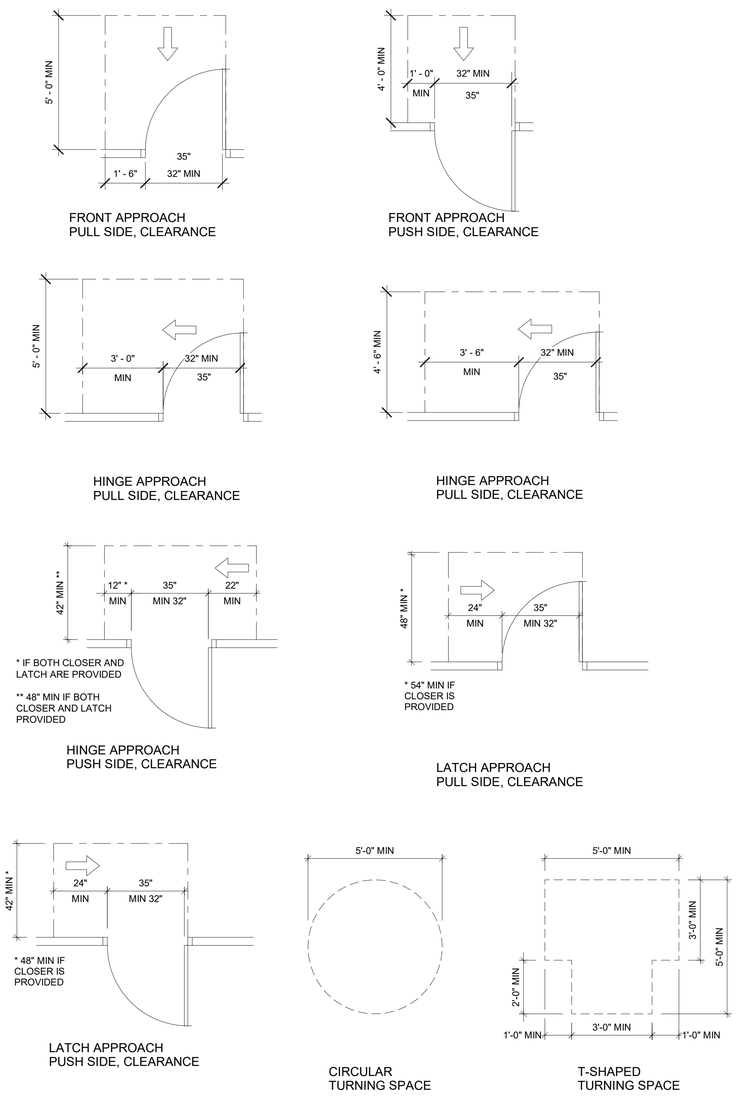

3 DOOR CLEARANCE REQUIREMENTS PH 1 PART B
3/8" = 1'-0"

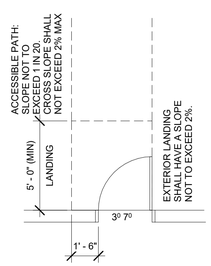

4 ACCESSIBLE ENTRANCE.
1/4" = 1'-0"

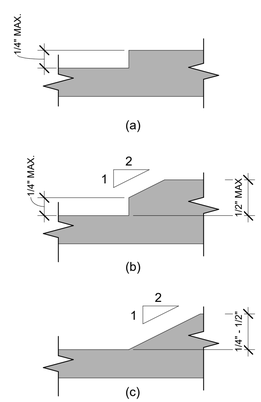

5 VERTICAL CHANGES IN LEVEL.
12" = 1'-0"

LICENSED ARCHITECT AR-986981
KYNDELL M. MADSEN STATE OF IDAHO
2/24/25

DATE

PHASE 1 PART B FOR:
TWIN FALLS COUNTY - WRIGHT AVE JAIL
2515 Wright Ave, Twin Falls, ID 83301
CODE REQUIREMENTS

Laughlin Ricks Architecture
architecture/planning
134 3RD Ave East * Twin Falls, Idaho 83301
(208) 736-8050

DATE: 2/24/25
KM Drawn
RCR Checked
#23029 PROJECT #

A1B-0.6

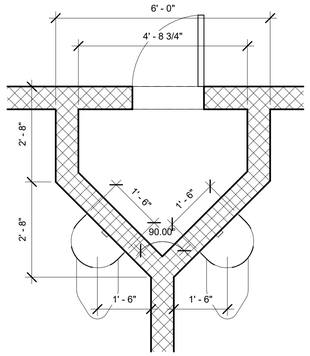

JAIL TOILET 1418 MOUNTING LOCATION
1 TYP.
1/2" = 1'-0"

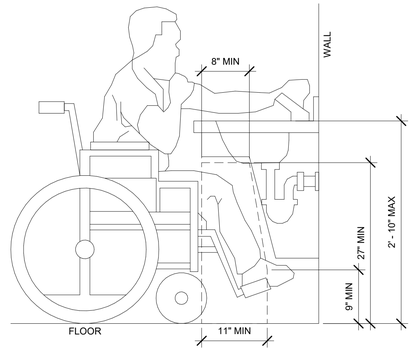

4 ADA LAVATORY CLEARANCE PH 1B
1" = 1'-0"

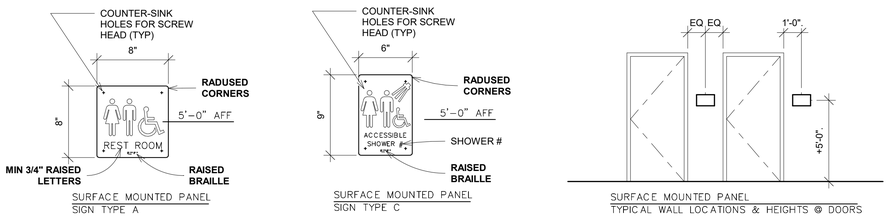

3 SIGNAGE - SIGNAGE TYPES Copy 1
1 1/2" = 1'-0"

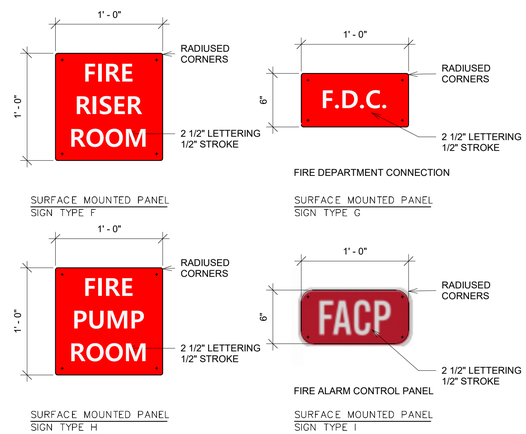

NOTE: FINAL LOCATIONS OF THESE SIGNS TO BE VERIFIED WITH FIRE SPRINKLER DRAWINGS

2 SIGNAGE - SIGNAGE TYPES - FIRE.
1 1/2" = 1'-0"

SIGN DESIGN NOTES

1. FIRE SIGNS SHALL BE FABRICATED FROM .080 ALUMINUM SHEET WITH MIN. OF .75" RADIUS CORNERS
2. FONT STYLE IS HANDEL GOTHIC BT CAPITAL FONTS WITH ADDITIONAL KERNING BETWEEN LETTERS
3. THE SIGN FACE SHALL HAVE A WHITE 3M DIAMOND GRADE REFLECTIVE SHEETING (3990 SERIES VIP TYPE IX) APPLIED AS A BACKGROUND
4. LETTERING/GRAPHICS SHALL BE ONE OF THE FOLLOWING:
   A. 3M ELECTROCUT FILM RED 1172 OR ORACAL 8300 TRANSPARENT CAL 201C RED OR EQUIVELANT IN DURABILITY, INVERSE CUT TO ALLOW REFLECTIVE BACKGROUND TO SHOW THROUGH LETTERING.
   B. SCREEN PRINTED USING 3M 8801 SERIES TRAFFIC SIGN RED TRANSLUCENT INK
5. SIGNS USED IN BUILDING INTERIORS ARE NOT REQUIRED TO USE A REFLECTIVE BACKGROUND.
6. ALL SIGNAGE AND CHANGES MUST BE PRE-APPROVED BY THE FIRE MARSHAL

GENERAL NOTES

1. FIRE RISER ROOM / FIRE PUMP ACCESS IAW 2018 IFC 901.4.6.2. MARKINGS ON ACCESS DOORS: ACCESS DOORS FOR AUTOMATIC SPRINKLER SYSTEM RISER ROOMS AND FIRE PUMP ROOMS SHALL BE LABELED WITH AN APPROVED SIGN. "FIRE RISER ROOM" & "FIRE PUMP ROOM"
2. FIRE ALARM CONTROL PANEL (FACP) ACCESS: ACCESS DOORS AND OR PATHWAYS LEADING TO THE FACP SHALL BE LABELED WITH APPROVED SIGN. THE LETTERING SHALL HAVE A MIN. HEIGHT OF 2 INCHES WITH A MIN STROKE OF 3/8 INCH. SIGN MUST BE RED WITH WHITE LETTERS "FACP"

LICENSED ARCHITECT
AR-986981
KYNDELL M. MADSEN
STATE OF IDAHO
2/24/25

DATE

PHASE 1 PART B FOR:
TWIN FALLS COUNTY - WRIGHT AVE JAIL
2515 Wright Ave, Twin Falls, ID 83301
CODE REQUIREMENTS

Laughlin Ricks Architecture
architecture/planning
134 3RD Ave East * Twin Falls, Idaho 83301
(208) 736-8050

DATE: 2/24/25
KM Drawn
RCR Checked
#23029 PROJECT #

A1B-0.7

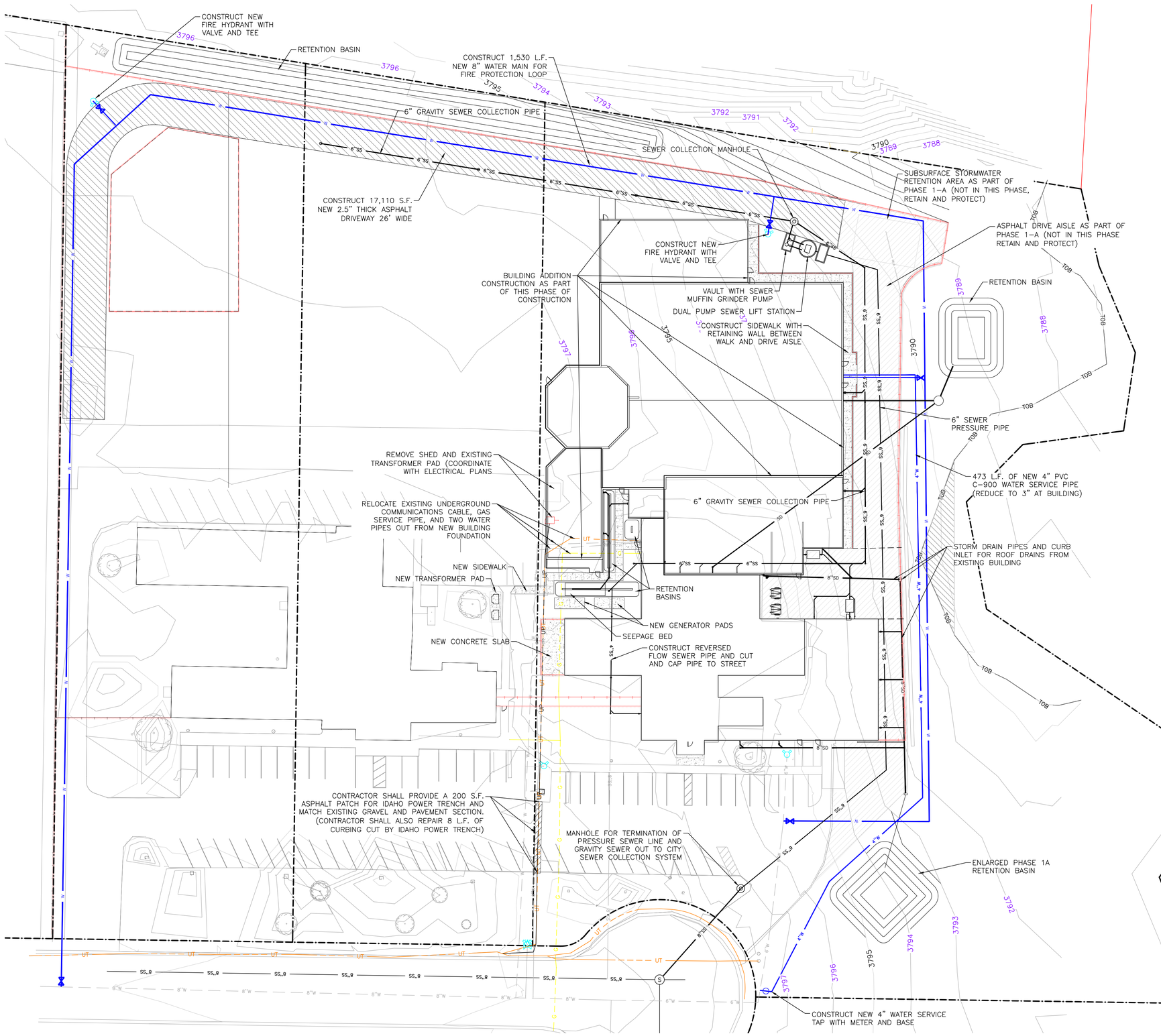

0 15 30 60

SCALE: 1" = 30'

(SCALE ONLY VALID FOR 24" x 36" PAPER)

CivilScience
376 FALLS AVENUE
TWIN FALLS, ID 83301
208.737.0007

REUSE OF DRAWINGS

THIS DOCUMENT, AND THE IDEAS AND DESIGNS INCORPORATED HEREIN, AS AN INSTRUMENT OF PROFESSIONAL SERVICE, IS THE PROPERTY OF **CIVIL SCIENCE** AND IS NOT TO BE USED, IN WHOLE OR PART, FOR ANY OTHER PROJECT WITHOUT THE EXPRESS WRITTEN AUTHORIZATION OF **CIVIL SCIENCE**.

NO.	DESCRIPTION	BY	APR.	DATE

REVISION

SITE PLAN
CIVIL ENGINEERING DRAWINGS

WRIGHT AVENUE JAIL PHASE 1-B
WRIGHT AVENUE
TWIN FALLS, IDAHO

PROFESSIONAL ENGINEER LICENSED STATE OF IDAHO STEPHEN ANDERSEN
APRIL 4, 2025

FILE : 20250313 PHASE B 100%
CSI PROJ. # : IF-24252.00
DRAWN BY: SRA
DESIGN BY: SRA
CHECKED BY: SRA
ONE INCH
AT FULL SIZE, IF NOT ONE INCH, SCALE ACCORDINGLY
LAST UPDATED: 4/4/2025

SHEET NUMBER:
C-1

Plot Date:4/4/2025 12:04 PM Plotted By: Stephen Andersen
Date Created:4/4/2025 L:\IDAHO\PROJECTS\ACTIVE 2024\IF24252.00 - TWIN FALLS COUNTY JAIL ELDRIDGE AVE\700 - CAD\DESIGN\20250313 PHASE B 100%.DWG

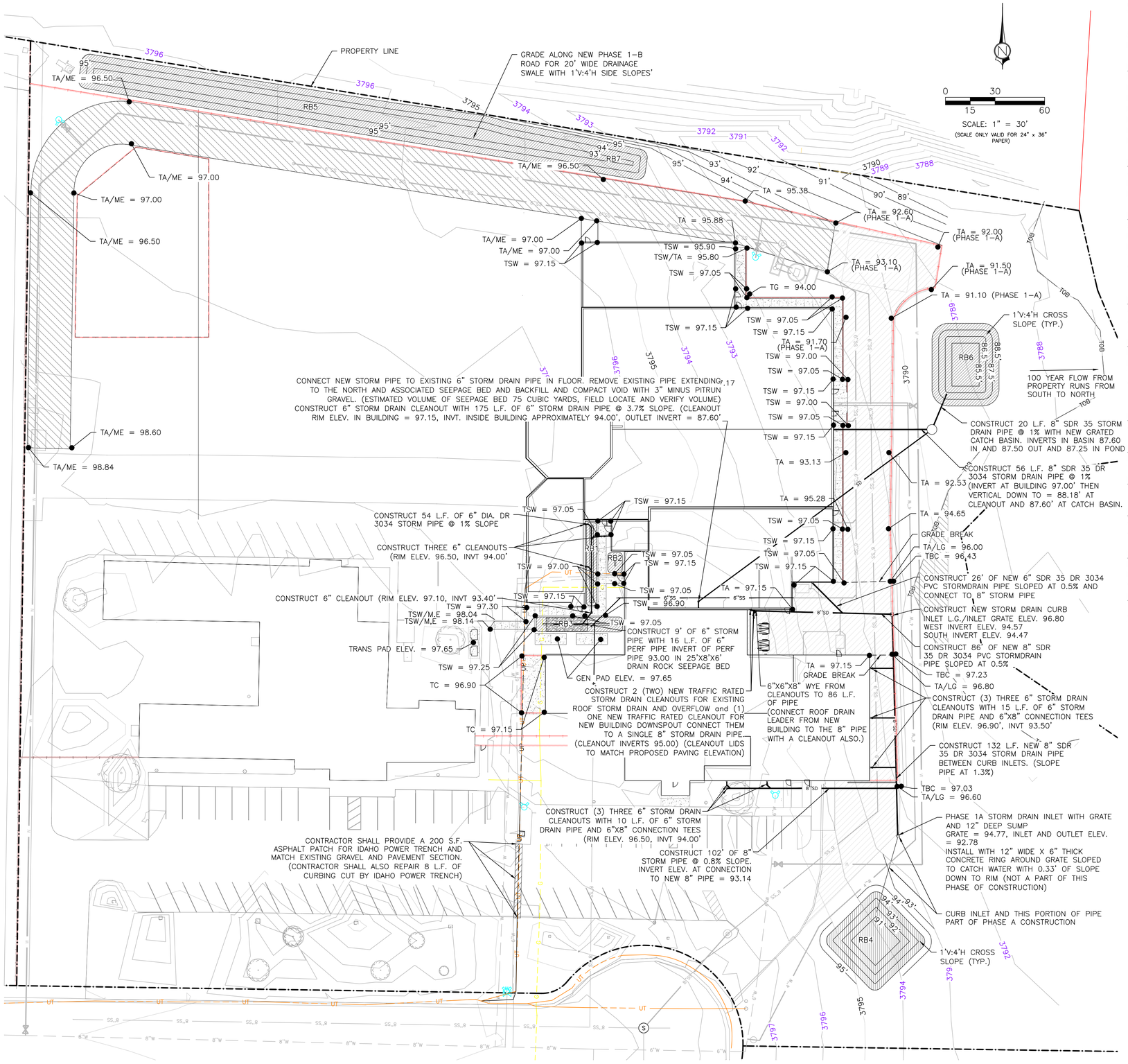

STORMWATER CALCULATIONS

SOME RUNOFF FROM THE EXISTING BUILDING HAS BEEN RE-PIPED AND COLLECTED INTO AN ENLARGED RETENTION BASIN, RB4, WHICH WAS DESIGNED AS PART OF PHASE 1A.

RETENTION BASIN VOLUMES
RB1 = 101 C.F.
RB2 = 39 C.F.
RB3 = 238 C.F.
RB3 SEEPAGE BED = (25' X 8' X 6') X 0.40 = 480 C.F.
RB4 = +1,955 C.F. ADDITIONAL VOLUME BY INCREASING SIZE AND DEPTH OF BASIN FROM PHASE 1A
RB5 = 9,147 C.F.
RB6 = 3,251 C.F.

RB1, RB2, AND RB3 AND ALSO SEEPAGE BED UNDER RB3 TRIBUTARY AREAS
AREA OF CONCRETE SIDEWALK AND CONCRETE PADS TO BE RETAINED = 1,654 S.F.
ROOF AREA TO BE RETAINED = 3,026 S.F.
LANDSCAPE AREA TO BE RETAINED = 2,030 S.F.

RB1, RB2, AND RB3, AND SEEPAGE BED UNDER RB3 TRIBUTARY AREA VOLUME CALCULATIONS
CONCRETE RUNOFF VOLUME REQUIRED = (1,654 S.F. X 1.9 IN /12 IN/FT) X 0.95 = 249 CUBIC FEET
ROOF DRAINAGE VOLUME REQUIRED = (3,026 S.F. X 1.9 IN/12 IN/FT) X 0.95 = 455 CUBIC FEET
LANDSCAPE AREA VOLUME REQUIRED = (2,030 S.F. X 1.9 IN/12 IN/FT) X 0.30 = 96 CUBIC FEET
TOTAL RETENTION VOLUME REQUIRED FOR THIS AREA = **800 CUBIC FEET**
VOLUME PROVIDED = RB1+RB2+RB3 + RB3 SB = 101C.F. + 39C.F. + 238C.F. + 480 C.F. = 858 CUBIC FEET

RB4 TRIBUTARY AREA VOLUME CALCULATIONS
AREA OF EXISTING ROOF ADDED TO THIS RETENTION BASIN = 3,813 S.F.
AREA OF NEW ROOF ADDED TO THIS RETENTION BASIN = 6,540 S.F.

RB4 TRIBUTARY AREA VOLUME CALCULATIONS (ADDITIONAL TO PHASE 1A)
EXISTING ROOF VOLUME REQUIRED = (3,813X1.9IN/12IN/FT)X0.95 = 466 CUBIC FEET
NEW ROOF VOLUME REQUIRED = (6,540X1.9IN/12IN/FT)X0.95 = 984 CUBIC FEET
TOTAL RETENTION VOLUME REQUIRED FOR THIS AREA = **1,450 CUBIC FEET**
VOLUME PROVIDED = RB4 = +1,955 CUBIC FEET ADDED TO VOLUME OF BASIN FORM PHASE 1A

RB5 TRIBUTARY AREA VOLUME CALCULATIONS
AREA OF ASPHALT NORTH OF THE NEW ADDITION = 17,197 S.F.

RB5 TRIBUTARY AREA CALCULATIONS
NEW PAVEMENT (17,197 S.F. X 1.9 IN/12 IN/FT) X 0.95 = 2,584 C.F.
TOTAL RETENTION VOLUME REQUIRED FOR THIS PHASE FOR THIS AREA = **2,584 CUBIC FEET**
RB5 VOLUME PROVIDED = 9,147 CUBIC FEET

RB6 TRIBUTARY AREA VOLUME CALCULATIONS
AREA OF NEW ROOF = 20,192 S.F.
AREA OF NEW SIDEWALK ON EAST SIDE OF BUILDING 1,671 S.F.

RB6 TRIBUTARY AREA CALCULATIONS
NEW ROOF VOLUME REQUIRED = (20,192 S.F. X 1.9 IN /12 IN/FT) X 0.95 = 3,037 CUBIC FEET
NEW SIDEWALK VOLUME REQUIRED = (1,671 S.F. X 1.9 IN / 12 IN/FT) X 0.95 = 251 CUBIC FEET
VOLUME OF RETENTION REQUIRED = **3,288 CUBIC FEET**
RB6 VOLUME PROVIDED = 3,308 CUBIC FEET

VOLUME PROVIDED EXCEEDS VOLUME REQUIRED FOR THIS PHASE OF CONSTRUCTION

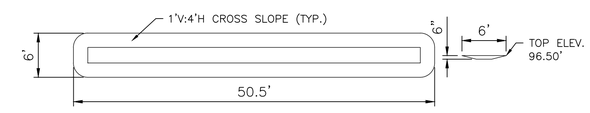

RB1 PLAN VIEW AND CROSS SECTION DETAIL

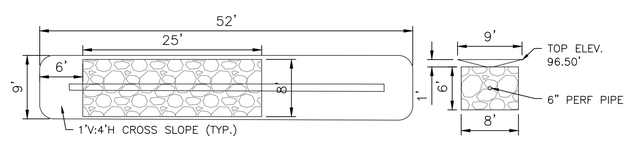

RB2 PLAN VIEW AND CROSS SECTION DETAIL

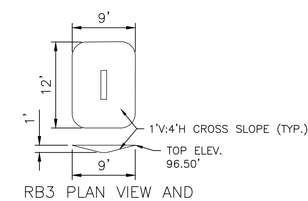

RB3 PLAN VIEW AND CROSS SECTION DETAIL

PROFESSIONAL ENGINEER LICENSED STATE OF IDAHO STEPHEN ANDERSEN
APRIL 4, 2025

CivilScience
376 FALLS AVENUE
TWIN FALLS, ID 83301
208.737.0007

REUSE OF DRAWINGS
THIS DOCUMENT, AND THE IDEAS AND DESIGNS INCORPORATED HEREIN, AS AN INSTRUMENT OF PROFESSIONAL SERVICE, IS THE PROPERTY OF CIVIL SCIENCE AND IS NOT TO BE USED, IN WHOLE OR IN PART, FOR ANY OTHER PROJECT WITHOUT THE EXPRESS WRITTEN AUTHORIZATION OF CIVIL SCIENCE.

NO.	DESCRIPTION	BY	APR.	DATE
	REVISION			

GRADING AND STORM UTILITY PLAN
CIVIL ENGINEERING DRAWINGS

WRIGHT AVENUE JAIL PHASE 1-B
WRIGHT AVENUE
TWIN FALLS, IDAHO

FILE : 20250313 PHASE B 100%
CSI PROJ. # : IF-24252.00
DRAWN BY: SRA
DESIGN BY: SRA
CHECKED BY: SRA
ONE INCH
AT FULL SIZE, IF NOT ONE INCH, SCALE ACCORDINGLY
LAST UPDATED: 4/4/2025

SHEET NUMBER:
C-2

Plot Date:4/4/2025 12:05 PM Plotted By: Stephen Andersen
Date Created:4/4/2025 L:\IDAHO\PROJECTS\ACTIVE 2024\IF24252.00 - TWIN FALLS COUNTY JAIL ELDRIDGE AVE\700 - CAD\DESIGN\20250313 PHASE B 100%.DWG

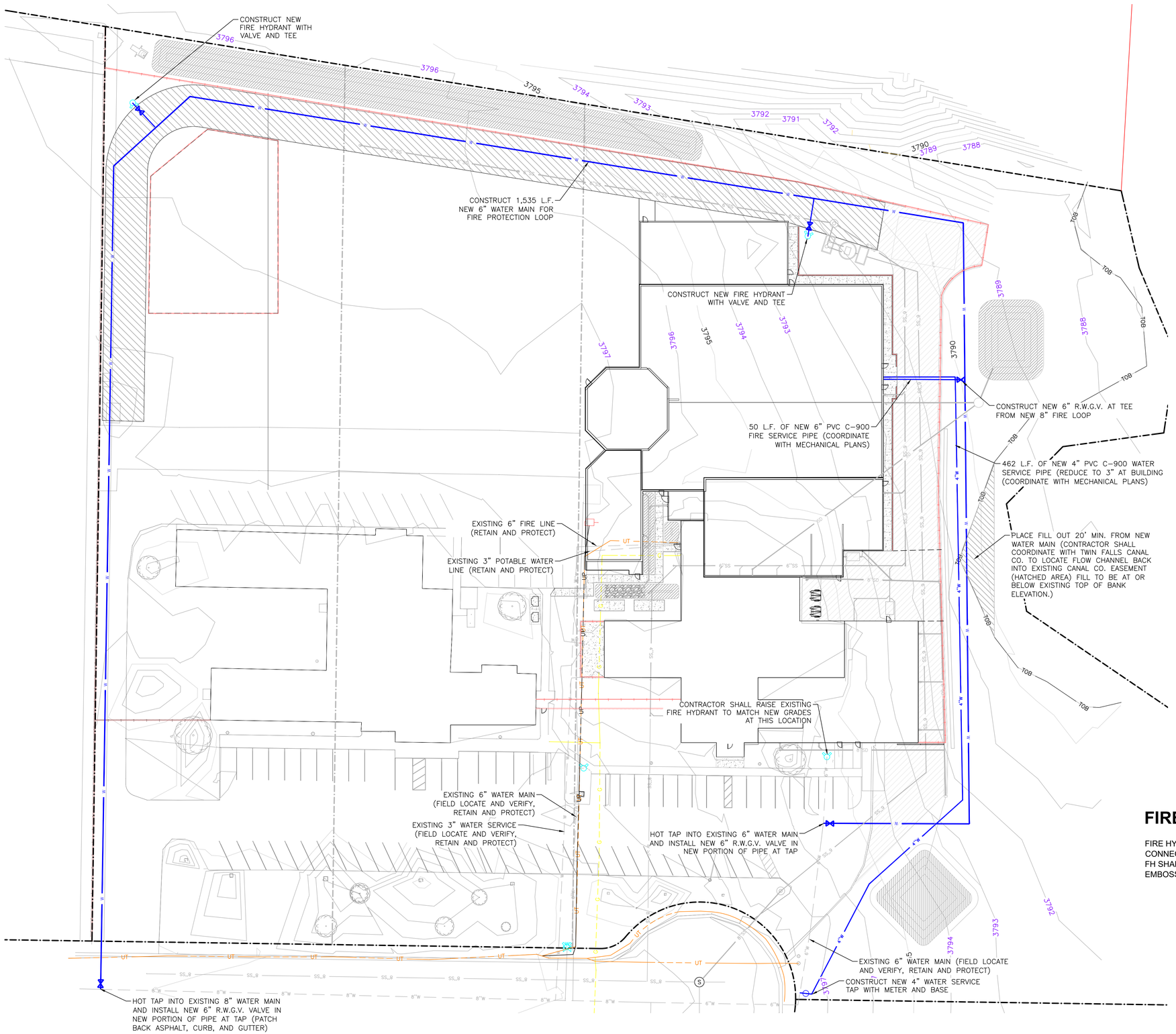

0 15 30 60

SCALE: 1" = 30'

(SCALE ONLY VALID FOR 24" x 36" PAPER)

FIRE NOTES

FIRE HYDRANTS (FH) : NEW AND EXISTING SHALL BE EQUIPPED WITH A 5" STORZ CONNECTOR, GENERALLY POINTING TOWARDS THE MAIN FIRE ACCESS ROAD. PUBLIC FH SHALL BE RED WITH WHITE CAPS. THE STREET SHUT OFF VALVE LID SHALL BE EMBOSSED (FIRE) AND PAINTED RED.

PROFESSIONAL ENGINEER LICENSED STATE OF IDAHO STEPHEN ANDERSEN APRIL 4 2025

CivilScience
376 FALLS AVENUE
TWIN FALLS, ID 83301
208.737.0007

REUSE OF DRAWINGS
THIS DOCUMENT, AND THE IDEAS AND DESIGNS INCORPORATED HEREIN, AS AN INSTRUMENT OF PROFESSIONAL SERVICE, IS THE PROPERTY OF **CIVIL SCIENCE** AND IS NOT TO BE USED, IN WHOLE OR PART, FOR ANY OTHER PROJECT WITHOUT THE EXPRESS WRITTEN AUTHORIZATION OF **CIVIL SCIENCE**.

NO.	DESCRIPTION	BY	APR.	DATE
	REVISION			

WATER UTILITY PLAN
CIVIL ENGINEERING DRAWINGS

WRIGHT AVENUE JAIL PHASE 1-B
WRIGHT AVENUE
TWIN FALLS, IDAHO

FILE : 20250313 PHASE B 100%
CSI PROJ. # : IF-24252.00
DRAWN BY: SRA
DESIGN BY: SRA
CHECKED BY: SRA
ONE INCH
AT FULL SIZE, IF NOT ONE INCH, SCALE ACCORDINGLY
LAST UPDATED: 4/4/2025

SHEET NUMBER:
C-3

Plot Date:4/4/2025 12:05 PM Plotted By: Stephen Andersen
Date Created:4/4/2025 L:\IDAHO\PROJECTS\ACTIVE 2024\IF24252.00 - TWIN FALLS COUNTY JAIL ELDRIDGE AVE\700 - CAD\DESIGN\20250313 PHASE B 100%.DWG

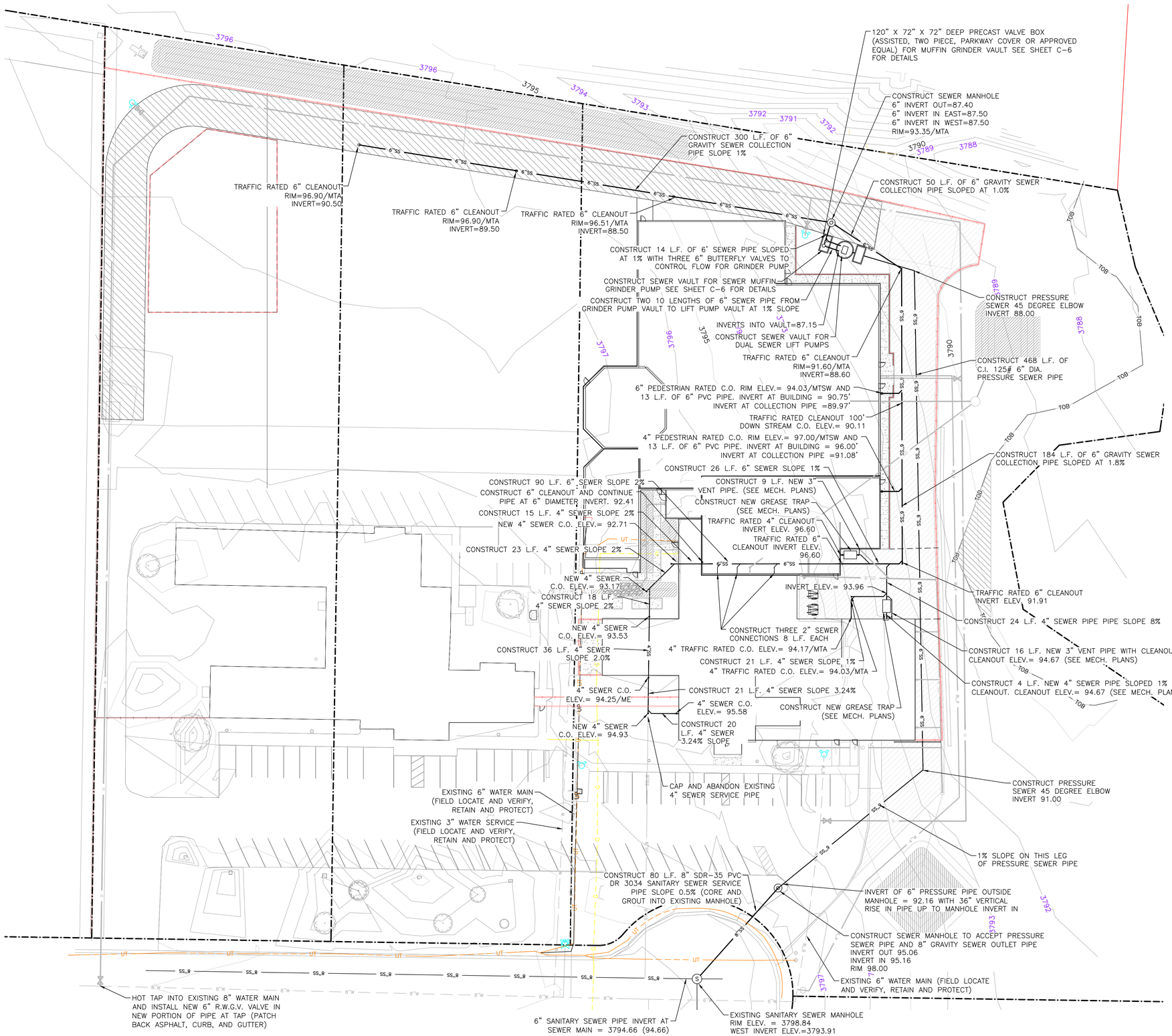

SCALE: 1" = 30'
(SCALE ONLY VALID FOR 24" x 36" PAPER)

SEWER ALARM NOTES:

1. CONTRACTOR SHALL CONNECT MUFFIN MONSTER GRINDER AND LIFT STATION SEWER ALARMS TO SECONDARY ANNUNCIATION ALARMS OR "REDUNDANT ALARMS" WHICH WILL BE LOCATED IN THE CONTROL ROOM. SEE ELECTRICAL PLANS FOR CONDUIT TO BE USED FOR THIS PURPOSE.
2. CONTRACTOR SHALL CONNECT TO ELECTRICAL CONDUITS AT BUILDING AND CONNECT THEM TO THE CONTROL BOXES FOR EACH OF THE PUMP SYSTEMS.

CivilScience
376 FALLS AVENUE
TWIN FALLS, ID 83301
208.737.0007

REUSE OF DRAWINGS
CONTRACT FOR THIS SUBDIVISION, INCORPORATED HEREIN, AS AN INSTRUMENT OF PROFESSIONAL SERVICE, IS THE PROPERTY OF **CIVIL SCIENCE** AND IS NOT TO BE USED, IN WHOLE OR PART, FOR ANY OTHER PROJECT WITHOUT THE EXPRESS WRITTEN AUTHORIZATION OF **CIVIL SCIENCE**.

NO.	DESCRIPTION	BY	APR.	DATE
	REVISION			

SEWER UTILITY PLAN
CIVIL ENGINEERING DRAWINGS

WRIGHT AVENUE JAIL PHASE 1-B
WRIGHT AVENUE
TWIN FALLS, IDAHO

PROFESSIONAL ENGINEER LICENSED
APRIL 4, 2025
STATE OF IDAHO
STEPHEN ANDERSEN

FILE : 20250313 PHASE B 100%
CSI PROJ. # : IF-24252.00
DRAWN BY: SRA
DESIGN BY: SRA
CHECKED BY: SRA
ONE INCH
AT FULL SIZE, IF NOT ONE INCH, SCALE ACCORDINGLY
LAST UPDATED: 4/4/2025

SHEET NUMBER:
C-4

Plot Date:4/4/2025 12:05 PM Plotted By: Stephen Andersen
Date Created:4/4/2025 L:\IDAHO\PROJECTS\ACTIVE 2024\IF24252.00 - TWIN FALLS COUNTY JAIL ELDRIDGE AVE\700 - CAD\DESIGN\20250313 PHASE B 100%.DWG

NOTES:

1. THE CONTRACTOR SHALL FURNISH ALL MATERIALS, TOOLS, EQUIPMENT LABOR AND DO ALL WORK NECESSARY TO CONSTRUCT THE SEWER LIFT STATION. COMPLETE AND READY FOR OPERATION, AS SHOWN ON THESE PLANS AND DETAILS, AND IN CONFORMANCE TO THE SPECIFICATIONS. MATERIALS, EQUIPMENT, AND WORK TO BE DONE SHALL COMPLY WITH THE APPLICABLE RULES, REGULATIONS, AND ORDINANCES OF THE CITY OF TWIN FALLS. PUMP AND PUMP CONTROLS AND ALL MATERIALS TO BE SUPPLIED BY THE CONTRACTOR.
2. SEE ELECTRICAL PLANS. DETAILS AND SPECIFICATIONS FOR ALL ELECTRICAL WORK TO BE FURNISHED AND PLACED FOR COMPLETION AND OPERATION OF THE SEWER LIFT STATION.
3. THE DETAILS SHOWN ON THESE PLANS ARE NOT INTENDED TO IDENTIFY OR EXCLUDE ANY MANUFACTURER OF THIS TYPE OF INSTALLATION. THEREFORE, THE CONTRACTOR SHALL SUBMIT SHOP DRAWINGS OF ALL MOUNTING HARDWARE, GUIDE–RAILS, DISCHARGE DISCONNECT BASE AND PERFORMANCE CURVES TO THE ENGINEER FOR APPROVAL. THE CONTRACTOR SHALL FURNISH THE ENGINEER WITH A COMPLETE SET OF THE AFOREMENTIONED DRAWINGS ON HIS INITIAL SUBMITTAL AND REQUIRED SUBMITTALS. ANY EQUIPMENT PURCHASED BY THE CONTRACTOR, PRIOR TO APPROVAL BY THE ENGINEER, SHALL BE AT THE CONTRACTOR'S RISK.
4. USE 316 STAINLESS STEEL BOLTS AND FASTNERS UNLESS OTHERWISE NOTED.
5. ALL REBAR SHALL BE GRADE 60.
6. ALL CONCRETE SHALL BE 4,000 PSI MIN.
7. SEWER PEAK FLOW DETERMINED BY FIXTURE COUNT OF 509.5 FIXTURES CORRELATING TO A PEAK FLOW FROM GRAPH OF 150 GALLONS PER MINUTE.
8. SEWER LIFT PUMP FLOW RATE OF 500 GPM WAS USED TO PROVIDE AN APPROXIMATE 45' RUN TIME OR LESS DURING PEAK FLOW RATE OF 150 GPM FOR A SINGLE PUMP.
9. PUMPS SHALL TAKE TURNS RUNNING SWITCHING WITH EACH ON CYCLE.

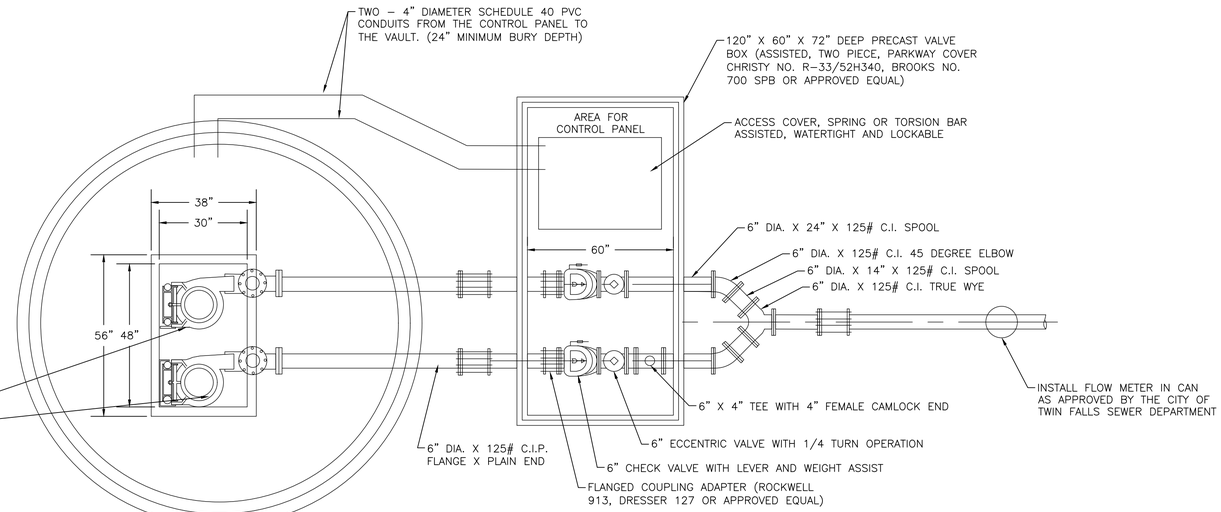

PLAN VIEW - BASE ELEV. & ACCESS COVER SCALE N.T.S.

PLAN VIEW - VALVE BOX, CLEANOUT & MANIFOLD SCALE N.T.S.

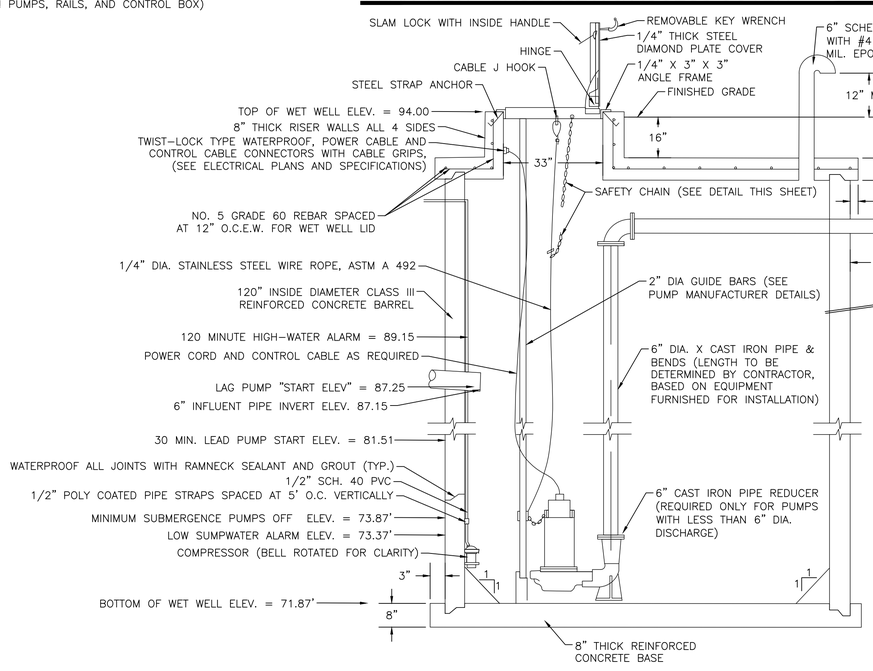

REINFORCED 10' DIA. CONCRETE MANHOLE-ELEVATION VIEW SCALE N.T.S.

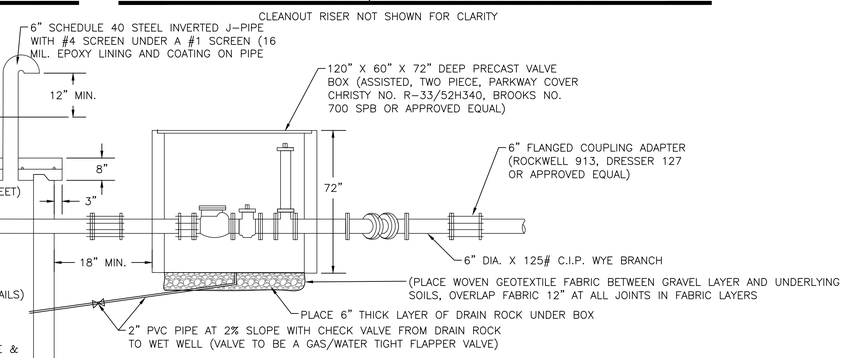

ELEVATION VIEW - VALVE BOX, CLEANOUT & MANIFOLD SCALE N.T.S.

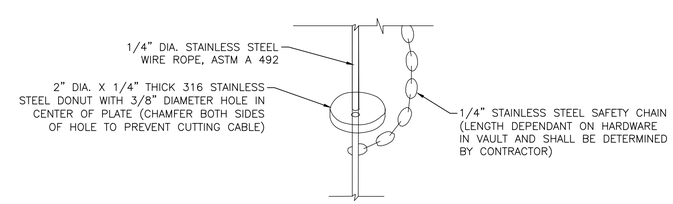

SAFETY CHAIN DETAIL SCALE N.T.S.

CivilScience
376 FALLS AVENUE
TWIN FALLS, ID 83301
208.737.0007

REUSE OF DRAWINGS
THIS DOCUMENT, AND THE IDEAS AND DESIGNS INCORPORATED HEREIN, AS AN INSTRUMENT OF PROFESSIONAL SERVICE, IS THE PROPERTY OF CIVIL SCIENCE AND IS NOT TO BE USED, IN WHOLE OR IN PART, FOR ANY OTHER PURPOSE, WITHOUT THE EXPRESS WRITTEN AUTHORIZATION OF CIVIL SCIENCE.

NO.	DESCRIPTION	BY	APR.	DATE
	REVISION			

LIFT STATION DETAILS
CIVIL ENGINEERING DRAWINGS

WRIGHT AVENUE JAIL PHASE 1-B
WRIGHT AVENUE
TWIN FALLS, IDAHO

PROFESSIONAL ENGINEER LICENSED APRIL 4, 2025 STATE OF IDAHO STEPHEN ANDERSEN

FILE : 20250313 PHASE B 100%
CSI PROJ. # : IF-24252.00
DRAWN BY: SRA
DESIGN BY: SRA
CHECKED BY: SRA
ONE INCH
AT FULL SIZE, IF NOT ONE INCH, SCALE ACCORDINGLY
LAST UPDATED: 4/4/2025

SHEET NUMBER:
C-5

Plot Date:4/4/2025 12:05 PM Plotted By: Stephen Andersen
Date Created:4/4/2025 L:\IDAHO\PROJECTS\ACTIVE 2024\IF24252.00 - TWIN FALLS COUNTY JAIL ELDRIDGE AVE\700 - CAD\DESIGN\20250313 PHASE B 100%.DWG

CONCRETE NOTES:

1. ALL EXTERIOR CONCRETE SLABS, NOT INCLUDING SIDEWALKS, SHALL BE 5" THICK CONCRETE WITH #4 REBAR SPACED AT 24" O.C. AND SHALL HAVE CRACK CONTROL JOINTS SCORED AT 6' O.C.E.W. IN A UNIFORM PATTERN UNLESS OTHERWISE NOTED.
2. ALL CONCRETE FLATWORK SHALL BE FROM 4,000 PSI 28 DAY STRENGTH CONCRETE WITH A MAXIMUM SLUMP OF 4".
3. ALL CONCRETE PLACEMENT SHALL BE IN ACCORDANCE WITH THE 2020 INTERNATIONAL BUILDING CODE UNLESS OTHERWISE NOTED.
4. ALL REBAR SHALL BE GRADE60 BAR AND BE FREE OF RUST SCALE, OILS, AND DIRT.
5. ALL CONCRETE FLATWORK SHALL HAVE ROUNDED TOOLED EDGES WITH A .5" RADIUS.
6. CRACK CONTROL JOINTS CAN BE SAWCUT OR HAND SCORED AND TO A DEPTH OF 1.5" UNLESS OTHERWISE NOTED.
7. 3/4" LEVELING COURSE SHALL BE USED UNDER ALL CONCRETE FLATWORK AND 5" THICK AFTER COMPACTION.
8. LEVELING COURSE GRAVELS SHALL EXTEND 12" BEYOND ALL EXTERIOR EDGES OF FLATWORK OTHER THAN SIDEWALKS.
9. ALL EXTERIOR CONCRETE SHALL HAVE ENTRAINED AIR ADDED TO THE CONCRETE MIXTURE 4%–7% ENTRAINED AIR CONTENT.

SEWER NOTES:

1. THE CONTRACTOR SHALL FURNISH ALL MATERIALS, TOOLS, EQUIPMENT LABOR AND DO ALL WORK NECESSARY TO CONSTRUCT THE SEWER LIFT STATION. COMPLETE AND READY FOR OPERATION, AS SHOWN ON THESE PLANS AND DETAILS, AND IN CONFORMANCE TO THE SPECIFICATIONS. MATERIALS, EQUIPMENT, AND WORK TO BE DONE SHALL COMPLY WITH THE APPLICABLE RULES, REGULATIONS, AND ORDINANCES OF THE CITY OF TWIN FALLS. PUMP AND PUMP CONTROLS AND ALL MATERIALS TO BE SUPPLIED BY THE CONTRACTOR.
2. SEE ELECTRICAL PLANS. DETAILS AND SPECIFICATIONS FOR ALL ELECTRICAL WORK TO BE FURNISHED AND PLACED FOR COMPLETION AND OPERATION OF THE SEWER LIFT STATION.
3. THE DETAILS SHOWN ON THESE PLANS ARE NOT INTENDED TO IDENTIFY OR EXCLUDE ANY MANUFACTURER OF THIS TYPE OF INSTALLATION. THEREFORE, THE CONTRACTOR SHALL SUBMIT SHOP DRAWINGS OF ALL MOUNTING HARDWARE, GUIDE–RAILS, DISCHARGE DISCONNECT BASE AND PERFORMANCE CURVES TO THE ENGINEER FOR APPROVAL. THE CONTRACTOR SHALL FURNISH THE ENGINEER WITH A COMPLETE SET OF THE AFOREMENTIONED DRAWINGS ON HIS INITIAL SUBMITTAL AND REQUIRED SUBMITTALS. ANY EQUIPMENT PURCHASED BY THE CONTRACTOR, PRIOR TO APPROVAL BY THE ENGINEER, SHALL BE AT THE CONTRACTOR'S RISK.
4. USE 316 STAINLESS STEEL BOLTS AND FASTNERS UNLESS OTHERWISE NOTED.
5. ALL REBAR SHALL BE GRADE 60.
6. ALL CONCRETE SHALL BE 4,000 PSI MIN.
7. SEWER PEAK FLOW DETERMINED BY FIXTURE COUNT OF 509.5 FIXTURES CORRELATING TO A PEAK FLOW FROM GRAPH OF 150 GALLONS PER MINUTE.

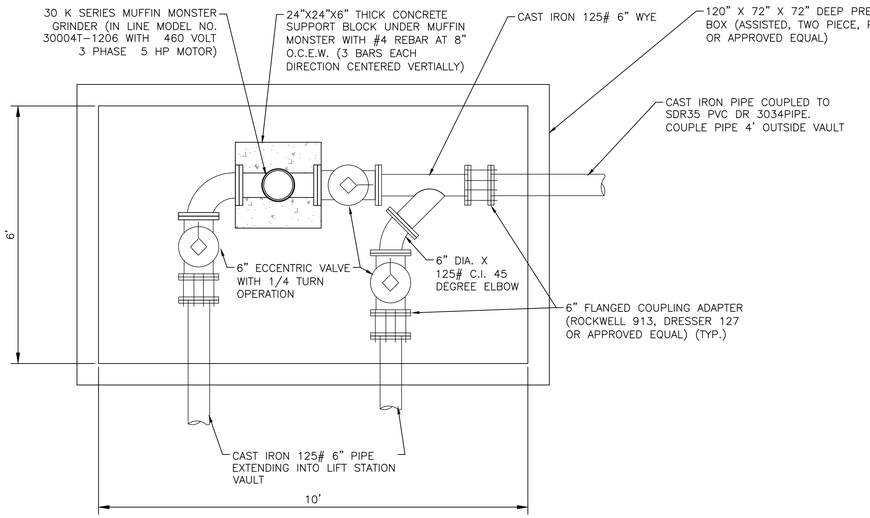

MUFFIN MONSTER PLAN VIEW DETAIL N.T.S.

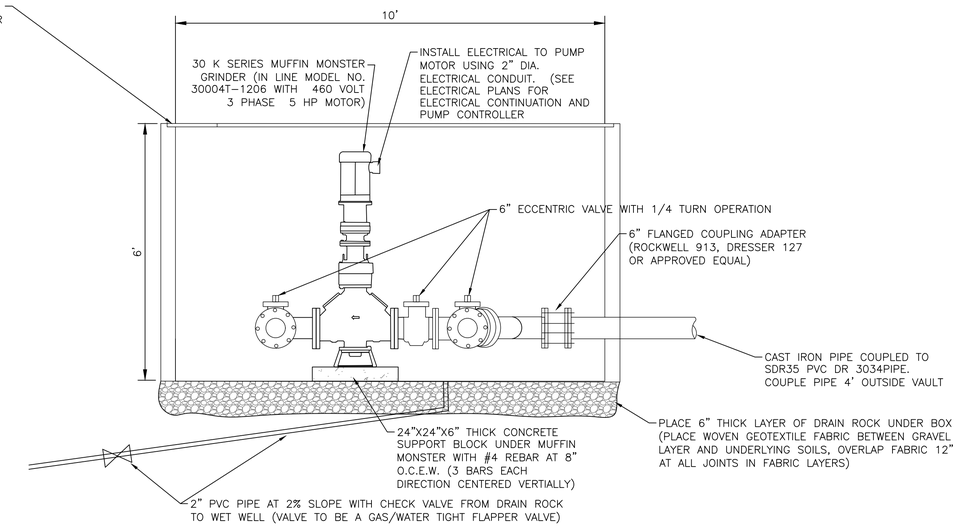

MUFFIN MONSTER ELEVATION VIEW DETAIL N.T.S.

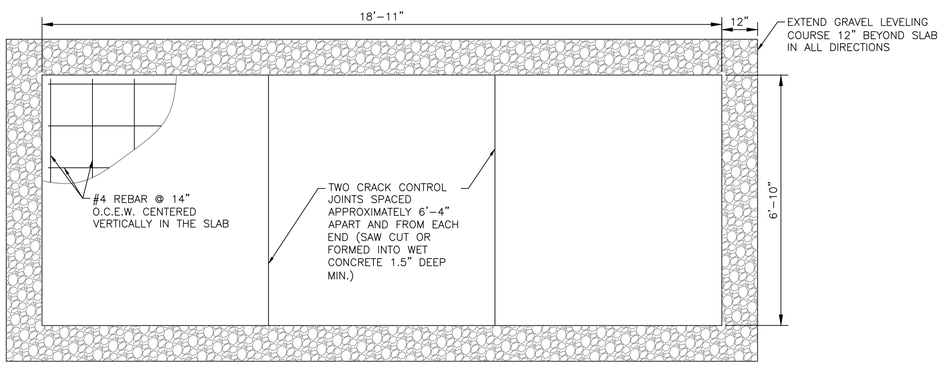

TRANSFORMER AND GENERATOR PAD PLAN VIEW DETAIL N.T.S.

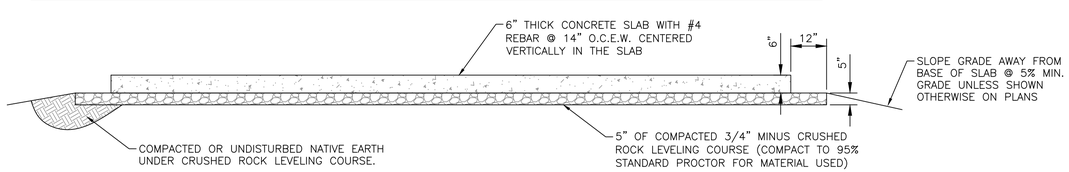

TRANSFORMER AND GENERATOR PAD CROSS SECTION DETAIL N.T.S.

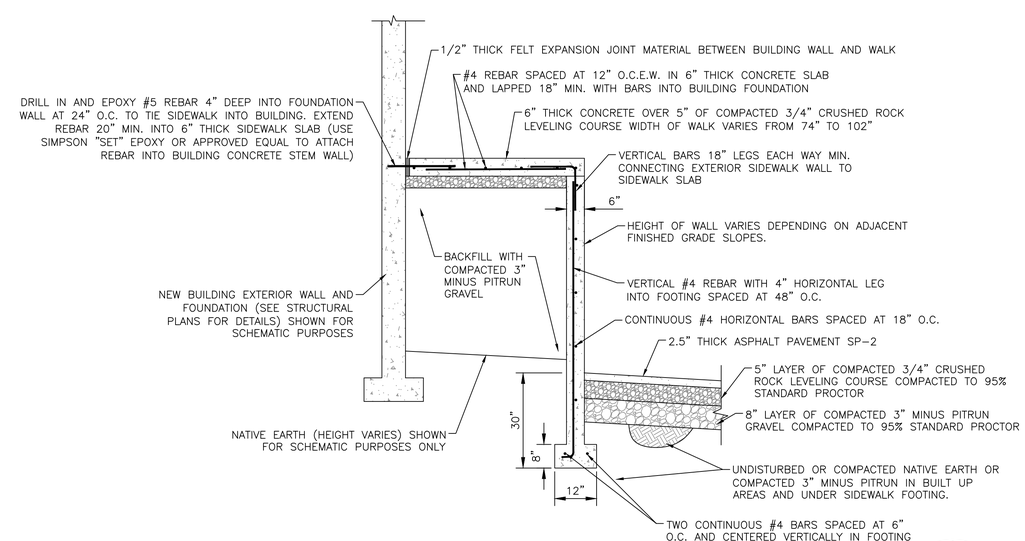

BUILT UP SIDEWALK ON EAST WALL CROSS SECTION DETAIL N.T.S.

PROFESSIONAL ENGINEER LICENSED APRIL 4, 2025 STATE OF IDAHO STEPHEN ANDERSEN

CivilScience
376 FALLS AVENUE
TWIN FALLS, ID 83301
208.737.0007

REUSE OF DRAWINGS
THIS DOCUMENT, AND THE IDEAS AND DESIGNS INCORPORATED HEREIN, AS AN INSTRUMENT OF PROFESSIONAL SERVICE, IS THE PROPERTY OF **CIVIL SCIENCE** AND IS NOT TO BE USED, IN WHOLE OR IN PART, FOR ANY OTHER PROJECT, WITHOUT THE EXPRESS WRITTEN AUTHORIZATION OF **CIVIL SCIENCE**.

NO.	DESCRIPTION	BY	APR.	DATE
	REVISION			

DETAILS
CIVIL ENGINEERING DRAWINGS

WRIGHT AVENUE JAIL PHASE 1-B
WRIGHT AVENUE
TWIN FALLS, IDAHO

FILE : 20250313 PHASE B 100%
CSI PROJ. # : IF-24252.00
DRAWN BY: SRA
DESIGN BY: SRA
CHECKED BY: SRA
ONE INCH
AT FULL SIZE, IF NOT ONE INCH, SCALE ACCORDINGLY
LAST UPDATED: 4/4/2025
SHEET NUMBER:
C-6

Plot Date:4/4/2025 12:05 PM Plotted By: Stephen Andersen
Date Created:4/4/2025 L:\IDAHO\PROJECTS\ACTIVE 2024\IF24252.00 - TWIN FALLS COUNTY JAIL ELDRIDGE AVE\700 - CAD\DESIGN\20250313 PHASE B 100% .DWG

PLAT SHOWING 870514

VALLEY INDUSTRIAL SUBDIVISION NO. 2

A SUBDIVISION IN

THE NW1/4 SECTION 23, T. 10 S., R. 17 E., B.M.

TWIN FALLS, TWIN FALLS COUNTY, IDAHO

1984

100 50 0 100 200 300
SCALE IN FEET

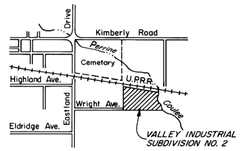

VICINITY SKETCH

2000 1000 0 2000
SCALE IN FEET

N.

CURVE DATA

CURVE	R	Δ	T	L	CH. L.	CH. BEARING
C-1	60.00'	141°19'04"	170.94'	147.99'	113.23'	S.71°09'11"W.
C-2	20.00'	5°19'04"	9.61'	17.91'	17.32'	N.63°50'49"W.
C-3	60.00'	141°19'04"	170.94'	147.99'	113.23'	N.70°09'53"W.
C-4	20.00'	51°19'04"	9.61'	17.91'	17.32'	S.64°50'07"W.

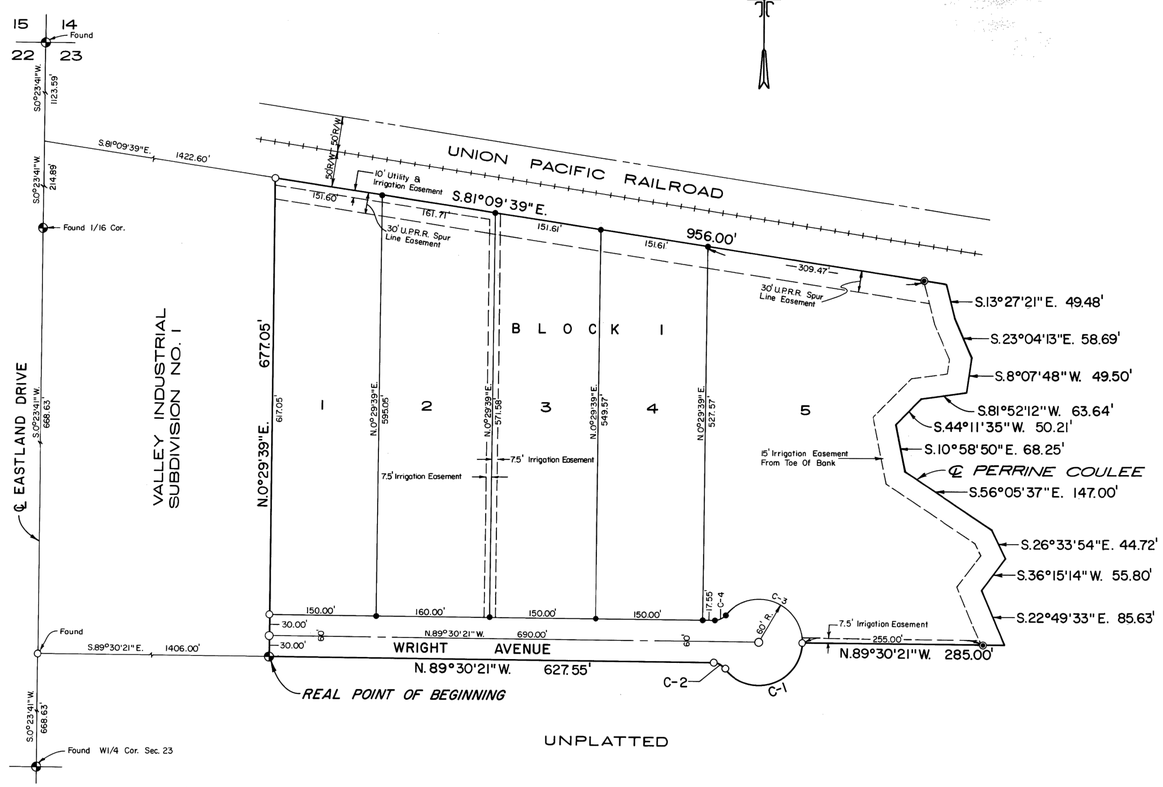

LEGEND

- Brass Cap
- 3/4" x 30" Steel Rebar
- 5/8" x 30" Steel Rebar
- 1/2" x 24" Steel Rebar
- Witness Corner (1/2" Steel Rebar)
- Public Utilities, Irrigation, and Drainage Easements As Noted.

NOTES

1. The South 20' Of The U.P.R.R. Spur Line Easement Is Reserved For A Spur Track And Not Designated For Utility Use.
2. There Is Hereby Reserved Along All Lot Frontages, Adjacent To Streets, A 5' Wide Easement For Public Utilities.

Valley Industrial #2 Book 13 Page 15

Twin Falls County, Idaho
Recorded For: JUB ENG
09:00:00 am Nov.01,1984
0000-870514

J-U-B ENGINEERS, INC.
Engineers Surveyors Planners
Twin Falls, Idaho

SHEET 1 OF 2

CivilScience
376 FALLS AVENUE
TWIN FALLS, ID 83301
208.737.0007

REUSE OF DRAWINGS
THIS DOCUMENT, AND THE IDEAS AND DESIGNS INCORPORATED HEREIN, AS AN INSTRUMENT OF PROFESSIONAL SERVICE, IS THE PROPERTY OF CIVIL SCIENCE AND IS NOT TO BE USED, IN WHOLE OR IN PART, FOR ANY OTHER PURPOSE, WITHOUT THE EXPRESS WRITTEN AUTHORIZATION OF CIVIL SCIENCE.

NO.	DESCRIPTION	BY	APR.	DATE
	REVISION			

LAND PLAT
CIVIL ENGINEERING DRAWINGS

WRIGHT AVENUE JAIL PHASE 1-B
WRIGHT AVENUE
TWIN FALLS, IDAHO

PROFESSIONAL ENGINEER LICENSED
APRIL 4, 2025
STATE OF IDAHO
STEPHEN ANDERSEN

FILE: 20250313 PHASE B 100%
CSI PROJ. # : IF-24252.00
DRAWN BY: SRA
DESIGN BY: SRA
CHECKED BY: SRA
ONE INCH
AT FULL SIZE, IF NOT ONE INCH, SCALE ACCORDINGLY
LAST UPDATED: 4/4/2025

SHEET NUMBER:
C-7

Plot Date:4/4/2025 12:06 PM Plotted By: Stephen Andersen
Date Created:4/4/2025 L:\IDAHO\PROJECTS\ACTIVE 2024\IF24252.00 - TWIN FALLS COUNTY JAIL ELDRIDGE AVE\700 - CAD\DESIGN\20250313 PHASE B 100%.DWG

CONSTRUCTION SPECIFICATION NOTES:

1. ALL WORK SHALL COMPLY WITH THE 2020 VERSION OF THE IDAHO STANDARDS FOR PUBLIC WORKS CONSTRUCTION (ISPWC) AS WELL AS THE TWIN FALLS MODIFICATIONS TO THE ISPWS. THE REVISIONS MADE BY THE CITY OF TWIN FALLS TO THE SPECIFICATIONS AND STANDARD DRAWINGS IN THE 2020 ISPWC SHALL TAKE PRECEDENCE OVER THE STANDARD VERSION OF THE ISPWC. THE CONTRACTOR SHALL HAVE COPIES OF BOTH THE 2020 ISPWC AS WELL AS THE CITY OF TWIN FALLS REVISIONS TO THE ISPWC ON SITE AT ALL TIMES FOR REFERENCE.
2. ALL DIVISIONS, SECTIONS AND SUBSECTIONS OF THE 2020 ISPWC AND CITY REVISIONS TO THE ISPWC SHALL APPLY TO WORK ON SITE WEATHER SPECIFICALLY LISTED BY NUMBER AND NAME OR NOT. IT IS THE RESPONSIBILITY OF THE CONTRACTOR TO MAKE SURE THEY COMPLY WITH THE 2020 ISPWC AND CITY REVISIONS TO THE ISPWC AT ALL TIMES AND WITH ALL WORK.
3. SPECIFIC DIVISIONS AND SUBSECTIONS ARE LISTED BELOW. IF THE ISPWC SUB SECTION LISTED HAS AN ASTERIX BEHIND IT IT MEANS THERE IS A KNOWN REVISION TO THAT SUBSECTION OF THE ISPWC MADE BY THE CITY OF TWIN FALLS. A PRINTABLE COPY OF THE CITY OF TWIN FALLS REVISIONS TO THE ISPWC CAN BE FOUND ON THE CITY OF TWIN FALLS WEBSITE (https://www.tfid.org/706/Standard-Specifications-Drawings) FOR BOTH SPECIFICATIONS AND STANDARD DRAWINGS AND COPIES CAN BE PRINTED FREE OF CHARGE. A COPY OF THE 2020 ISPWC MUST BE PURCHASED AND CAN NOT BE COPIED OR REPRODUCED BY THE ENGINEER AS SIGNIFIED ON THE OFFICIAL ISPWC DOCUMENTS.

APPLICABLE SECTIONS OF THE ISPWC FOR THIS PROJECT:

DIVISION 200-EARTHWORK
- SECTION 201-CLEARING AND GRUBBING AND REMOVAL OF OBSTRUCTIONS *
- SECTION 202-EXCAVATION AND EMBANKMENT *
- SECTION 203-SOIL MATERIALS
- SECTION 204-STRUCTURAL EXCAVATION AND COMPACTING BACKFILL
- SECTION 205-DEWATERING
- SECTION 206-PERMANENT EROSION CONTROL
- SECTION 207-PERMANENT STORMWATER BEST MANAGEMENT PRACTICES

DIVISION 300-TRENCHING
- SECTION 301-TRENCH EXCAVATION *
- SECTION 304=TRENCH FOUNDATION STABILIZATION *
- SECTION 305-PIPE BEDDING *
- SECTION 306-TRENCH BACKFILL *
- SECTION 307-STREET CUTS AND SURFACE REPAIRS *

DIVISION 400-WATER
- SECTION 401-WATER PIPE AND FITTINGS *
- SECTION 402-HYDRAULIC VALVES *
- SECTION 403-HYDRANTS *
- SECTION 404-WATER SERVICE LINE AND METERS *
- SECTION 405-NON-POTABLE WATER LINE SEPARATION

DIVISION 500-SEWER
- SECTION 501-GRAVITY SEWERS *
- SECTION 502-MANHOLES *
- SECTION 503-CLEAN-OUTS *
- SECTION 504-SEWER SERVICES *
- SECTION 505-PRESSURE SEWERS *
- SECTION 507-SANITARY SEWER OPEN CUT REPAIR/REHABILITATION *

DIVISION 600-CULVERTS, STORM DRAINS, AND GRAVITY IRRIGATION
- SECTION 601-CULVERT, STORM DRAIN AND GRAVITY IRRIGATION PIPE *
- SECTION 602-STORM DRAIN INLETS, CATCH BASINS, MANHOLES, AND GRAVITY IRRIGATION STRUCTURES *

DIVISION 700-CONCRETE
- SECTION 701-CONCRETE FORMWORK
- SECTION 702-CONCRETE REINFORCEMENT
- SECTION 703-CAST-IN-PLACE CONCRETE *
- SECTION 704-PRECAST CONCRETE
- SECTION 706-OTHER CONCRETE CONSTRUCTION *

DIVISION 800-AGGREGATES AND ASPHALT
- SECTION 801-UNCRUSHED AGGREGATES *
- SECTION 802-CRUSHED AGGREGATES *
- SECTION 803-PLANT MIX AGGREGATES
- SECTION 805-ASPHALT *
- SECTION 806-TACK COAT *
- SECTION 810-PLANT MIX PAVEMENT *
- SECTION 811-ROAD MIX PAVEMENT

DIVISION 2000-MISCELLANEOUS
- SECTION 2030-UTILITY ADJUSTMENTS *
- SECTION 2040-FENCING
- SECTION 2050-CONSTRUCTION GEOTEXTILES
- SECTION 2060-WATER FOR CONSTRUCTION *

PROFESSIONAL ENGINEER LICENSED APRIL 4, 2025 STATE OF IDAHO STEPHEN ANDERSEN

CivilScience
376 FALLS AVENUE
TWIN FALLS, ID 83301
208.737.0007

REUSE OF DRAWINGS
THIS DOCUMENT, AND THE IDEAS AND DESIGNS INCORPORATED HEREIN, AS AN INSTRUMENT OF PROFESSIONAL SERVICE, IS THE PROPERTY OF **CIVIL SCIENCE** AND IS NOT TO BE USED, IN WHOLE OR PART, FOR ANY OTHER PROJECT WITHOUT THE EXPRESS WRITTEN AUTHORIZATION OF **CIVIL SCIENCE**.

NO.	DESCRIPTION	BY	APR.	DATE

REVISION

STANDARD SPECIFICATION NOTES
CIVIL ENGINEERING DRAWINGS

WRIGHT AVENUE JAIL PHASE 1-B
WRIGHT AVENUE
TWIN FALLS, IDAHO

FILE : 20250313 PHASE B 100%
CSI PROJ. # : IF-24252.00
DRAWN BY: SRA
DESIGN BY: SRA
CHECKED BY: SRA
ONE INCH
AT FULL SIZE, IF NOT ONE INCH, SCALE ACCORDINGLY
LAST UPDATED: 4/4/2025

SHEET NUMBER:
C-8

Plot Date:4/4/2025 12:06 PM Plotted By: Stephen Andersen
Date Created:4/4/2025 L:\IDAHO\PROJECTS\ACTIVE 2024\IF24252.00 - TWIN FALLS COUNTY JAIL ELDRIDGE AVE\700 - CAD\DESIGN\20250313 PHASE B 100% .DWG

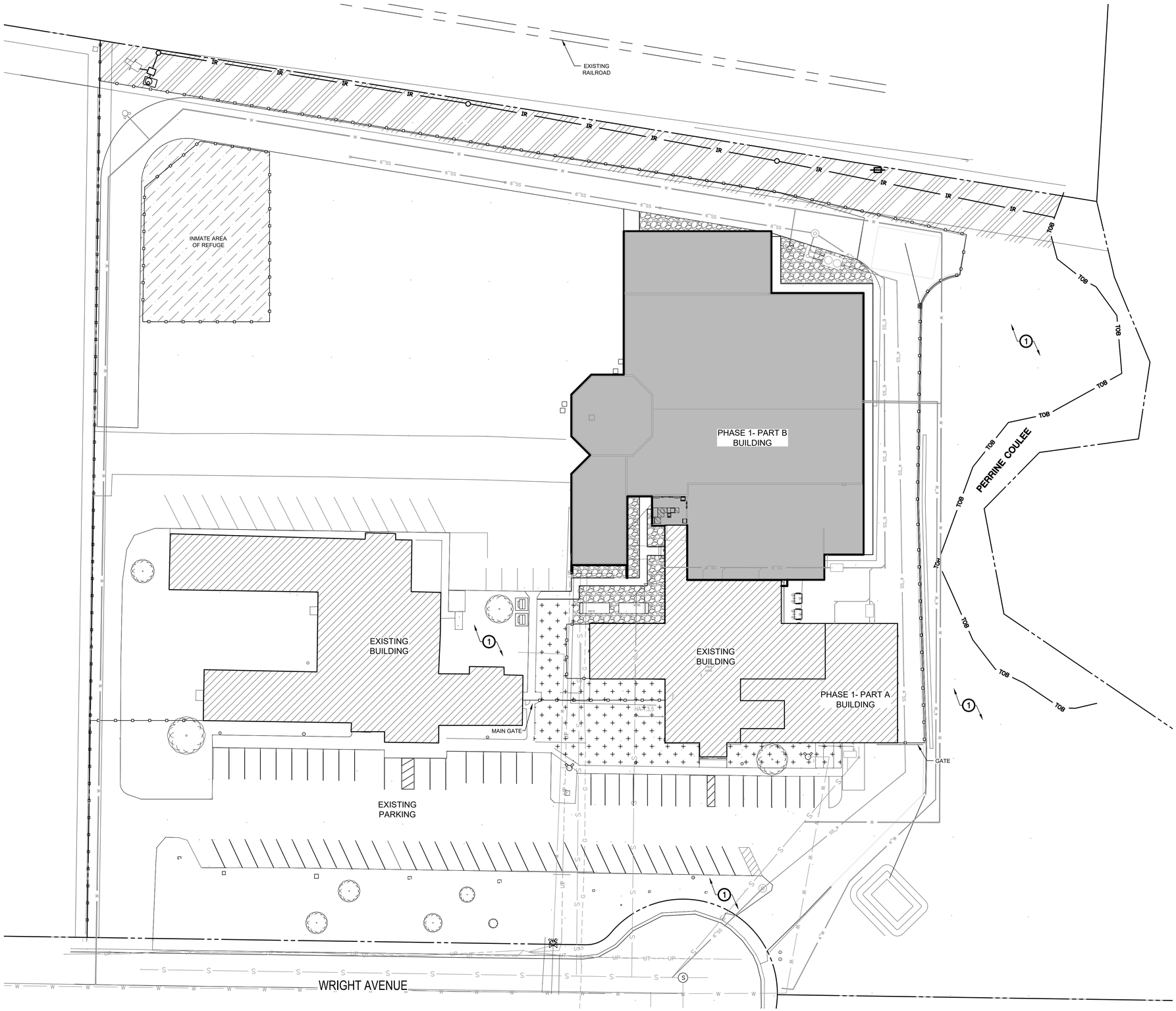

LANDSCAPE PLAN

SCALE: 1"= 30'-0"

LANDSCAPE LEGEND

- PROPERTY LINE (VERIFY)
- TURF SOD OVER APPROVED TOPSOIL AS SPECIFIED
- 4" DEPTH OF ¼" MINUS PEA GRAVEL OVER DEWITT 5 PRO WEED BARRIER FABRIC AS SPECIFIED OR APPROVED EQUAL. APPLY PRE-EMERGENT PRIOR TO WEED FABRIC AS SPECIFIED.
- DRYLAND SEED MIX OVER APPROVED TOPSOIL AS SPECIFIED
- 4" DEPTH OF ¾" MINUS ROADMIX @ 95% COMPACTION. APPLY PRE-EMERGENT AS SPECIFIED PRIOR TO RACK PLACEMENT.
- PROPOSED BUILDING
- EXISTING BUILDING

CALLOUT LEGEND

1 SAVE AND PROTECT EXISTING LANDSCAPING

811 Know what's below. Call before you dig.

CALL 2 BUSINESS DAYS IN ADVANCE BEFORE YOU DIG, GRADE, OR EXCAVATE FOR THE MARKING OF UNDERGROUND MEMBER UTILITIES

BRECKON landdesign
• Civil Engineering
• Landscape Architecture
• Erosion & Sediment Control
• Graphic Communication
• Irrigation Design
• Land Planning
www.breckonlanddesign.com
Fax: (208) 376-8539
Phone: 208-376-5153
6661 North Glenwood Street
Garden City, Idaho 83714

STATE OF IDAHO — JON FRITZ BRECKON — LA-16536 — 2/18/2025 — LANDSCAPE ARCHITECT

DATE

PHASE 1 PART B FOR:
TWIN FALLS COUNTY - WRIGHT AVE JAIL
2515 Wright Ave, Twin Falls, ID 83301
LANDSCAPE PLAN

Laughlin Ricks Architecture
architecture/planning
134 3RD Ave East, * Twin Falls, Idaho 83301
(208) 736-8050

DATE: 2/18/2025
CI — Drawn
JB — Checked
#23029-1B — PROJECT #

SL1.0

S:_projects\2024\24051 tf county jail impl\CAD\sheets\24051 landscape.dwg plotted by: civarson on Mon, March 3, 2025 at 11:28 AM

LANDSCAPE NOTES:

1. CONTRACTOR SHALL REPORT TO DESIGN PROFESSIONAL ALL CONDITIONS WHICH IMPAIR AND/OR PREVENT THE PROPER EXECUTION OF THIS WORK, PRIOR TO BEGINNING WORK.
2. NO MATERIAL SUBSTITUTIONS SHALL BE MADE WITHOUT THE DESIGN PROFESSIONAL'S PRIOR WRITTEN APPROVAL. ALTERNATE MATERIALS OF SIMILAR SIZE AND CHARACTER MAY BE CONSIDERED IF SPECIFIED PLANT MATERIALS CAN NOT BE OBTAINED.
3. COORDINATE ALL WORK WITH ALL OTHER SITE RELATED DEVELOPMENT DRAWINGS.
4. COORDINATE WORK SCHEDULE AND OBSERVATIONS WITH DESIGN PROFESSIONAL PRIOR TO CONSTRUCTION START-UP.
5. ALL PLANT MATERIAL SHALL BE INSTALLED AS PER DETAILS.
6. ALL PLANT MATERIAL SHALL CONFORM TO THE AMERICAN NURSERYMAN STANDARDS FOR TYPE AND SIZE SHOWN. PLANTS WILL BE REJECTED IF NOT IN A SOUND AND HEALTHY CONDITION.
7. IN THE EVENT OF A PLANT COUNT DISCREPANCY, PLANT SYMBOLS SHALL OVERRIDE SCHEDULE QUANTITIES AND CALL OUT SYMBOL NUMBERS.
8. ALL PLANTING BEDS SHALL BE COVERED WITH A MINIMUM OF 3" DEPTH OF LARGE (2" MINUS) BARK MULCH. SUBMIT SAMPLE FOR APPROVAL.
9. ALL PLANT MATERIAL SHALL BE GUARANTEED FOR A PERIOD OF <u>ONE YEAR</u> BEGINNING AT THE DATE OF ACCEPTANCE BY THE OWNER. REPLACE ALL PLANT MATERIAL FOUND DEAD OR NOT IN A HEALTHY CONDITION IMMEDIATELY WITH THE SAME SIZE AND SPECIES AT NO COST TO THE OWNER.
10. FINISH GRADES SHALL PROVIDE A SMOOTH TRANSITION WITH ADJACENT SURFACES AND ENSURE POSITIVE DRAINAGE IN ACCORDANCE WITH THE SITE GRADING PLAN.
11. AMEND EXISTING APPROVED TOPSOIL AT A RATIO OF THREE CUBIC YARDS OF APPROVED COMPOST PER 1000 SQUARE FEET. ROTO-TILL ORGANIC MATTER A MINIMUM OF 6 INCHES INTO TOPSOIL.
12. FERTILIZE ALL TREES AND SHRUBS WITH 'AGRIFORM' PLANTING TABLETS. QUANTITY PER MANUFACTURER'S RECOMMENDATIONS.
13. ALL PLANTING BEDS SHALL HAVE A MINIMUM 18" DEPTH OF TOPSOIL. LAWN AREAS SHALL HAVE A MINIMUM 12" DEPTH OF TOPSOIL. SPREAD, COMPACT, AND FINE GRADE TOPSOIL TO A SMOOTH AND UNIFORM GRADE 3" BELOW ADJACENT SURFACES OF PLANTER BED AREAS, 1-1/2" BELOW ADJACENT SURFACES OF TURF SOD AREAS, AND 1" BELOW ADJACENT SURFACES OF TURF SEED AREAS.
14. REUSE EXISTING TOPSOIL STOCKPILED ON THE SITE. SUPPLEMENT WITH IMPORTED TOPSOIL WHEN QUANTITIES ARE INSUFFICIENT. VERIFY SUITABILITY AND CONDITION OF TOPSOIL AS A GROWING MEDIUM. PERFORM SOIL TEST/ ANALYSIS AND PROVIDE ADDITIONAL AMENDMENT AS DETERMINED BY SOIL TESTS. TOPSOIL SHALL BE A LOOSE, FRIABLE, SANDY LOAM, CLEAN AND FREE OF TOXIC MATERIALS, NOXIOUS WEEDS, WEED SEEDS, ROCKS, GRASS OR OTHER FOREIGN MATERIAL AND A HAVE A PH OF 5.5 TO 7.0. IF ONSITE TOPSOIL DOES NOT MEET THESE MINIMUM STANDARDS, CONTRACTOR IS RESPONSIBLE TO EITHER:
   A) PROVIDE APPROVED IMPORTED TOPSOIL, OR
   B) IMPROVE ON-SITE TOPSOIL WITH METHODS APPROVED BY THE DESIGN PROFESSIONAL.
15. IF IMPORTED TOPSOIL FROM OFF-SITE SOURCES IS REQUIRED, ENSURE IT IS FERTILE, FRIABLE, NATURAL LOAM, SURFACE SOIL, REASONABLY FREE OF SUBSOIL, CLAY LUMPS, BRUSH, WEEDS AND OTHER LITTER, AND FREE OF ROOTS, STUMPS, STONES LARGER THAN 2 INCHES IN ANY DIMENSION, AND OTHER EXTRANEOUS OR TOXIC MATTER HARMFUL TO PLANT GROWTH.
   A) OBTAIN TOPSOIL FROM LOCAL SOURCES OR FROM AREAS HAVING SIMILAR SOIL CHARACTERISTICS TO THOSE FOUND ON THE PROJECT SITE. OBTAIN TOPSOIL ONLY FROM NATURALLY, WELL-DRAINED SITES WHERE TOPSOIL OCCURS AT A DEPTH OF NOT LESS THAN 4 INCHES.
   B) REPRESENTATIVE SAMPLES SHALL BE TESTED FOR ACIDITY, FERTILITY, TOXICITY, AND GENERAL TEXTURE BY A RECOGNIZED COMMERCIAL OR GOVERNMENT AGENCY AND COPIES OF THE TESTING AGENCY'S FINDINGS AND RECOMMENDATIONS SHALL BE FURNISHED TO THE OWNER'S REPRESENTATIVE BY THE CONTRACTOR. NO TOPSOIL SHALL BE DELIVERED IN A FROZEN OR MUDDY CONDITION. ACIDITY/ALKALINITY RANGE - PH. 5.5 TO 7.0.
16. IMMEDIATELY CLEAN UP ANY TOPSOIL OR OTHER DEBRIS ON THE SITE CREATED FROM LANDSCAPE OPERATIONS AND DISPOSE OF PROPERLY OFF SITE.
17. SEEPAGE BEDS AND OTHER STORM DRAINAGE FACILITIES MUST BE PROTECTED FROM ANY AND ALL CONTAMINATION DURING THE CONSTRUCTION AND INSTALLATION OF THE LANDSCAPE IRRIGATION SYSTEM.
18. IN THE EVENT OF A DISCREPANCY, NOTIFY THE DESIGN PROFESSIONAL IMMEDIATELY.

LANDSCAPE AREA PREPARATION NOTES:

1. LIMIT TURF SUBGRADE PREPARATION TO AREAS TO BE PLANTED.
2. NEWLY GRADED SUBGRADES: LOOSEN SUBGRADE TO A MINIMUM DEPTH OF 4 INCHES. REMOVE STONES LARGER THAN 1 INCH IN ANY DIMENSION AND STICKS, ROOTS, RUBBISH, AND OTHER EXTRANEOUS MATTER AND LEGALLY DISPOSE OF THEM OFF OWNER'S PROPERTY.
   A. SPREAD PLANTING SOIL TO A DEPTH OF 12 INCHES IN TURF AREAS AND 18 INCHES AT SHRUB BED AREAS BUT NOT LESS THAN REQUIRED TO MEET FINISH GRADES AFTER LIGHT ROLLING AND NATURAL SETTLEMENT. DO NOT SPREAD IF PLANTING SOIL OR SUBGRADE IS FROZEN, MUDDY, OR EXCESSIVELY WET.
   B. SPREAD PLANTING SOIL OVER LOOSENED SUBGRADE.
   C. REDUCE ELEVATION OF PLANTING SOIL TO ALLOW FOR SOIL THICKNESS OF SOD OR SEED.
3. UNCHANGED SUBGRADES: IF TURF IS TO BE PLANTED IN AREAS UNALTERED OR UNDISTURBED BY EXCAVATING, GRADING, OR SURFACE-SOIL STRIPPING OPERATIONS, PREPARE SURFACE SOIL AS FOLLOWS:
   A. REMOVE EXISTING GRASS, VEGETATION, AND TURF. DO NOT MIX INTO SURFACE SOIL.
   B. LOOSEN SURFACE SOIL TO A DEPTH OF AT LEAST 6 INCHES. PROVIDE WEED ABATEMENT PROCEDURE. APPLY SOIL AMENDMENTS AND FERTILIZERS ACCORDING TO PLANTING SOIL MIX PROPORTIONS AND MIX THOROUGHLY INTO TOP 6 INCHES OF SOIL. TILL SOIL TO A HOMOGENEOUS MIXTURE OF FINE TEXTURE.
   C. APPLY SOIL AMENDMENTS DIRECTLY TO SURFACE SOIL BEFORE LOOSENING.
   D. REMOVE STONES LARGER THAN 1 INCH IN ANY DIMENSION AND STICKS, ROOTS, TRASH, AND OTHER EXTRANEOUS MATTER.
   E. LEGALLY DISPOSE OF WASTE MATERIAL, INCLUDING GRASS, VEGETATION, AND TURF, OFF OWNER'S PROPERTY.
4. FINISH GRADING: GRADE PLANTING AREAS TO A SMOOTH, UNIFORM SURFACE PLANE WITH LOOSE, UNIFORMLY FINE TEXTURE. GRADE TO WITHIN PLUS OR MINUS 1/2 INCH OF FINISH ELEVATION. ROLL AND RAKE, REMOVE RIDGES, AND FILL DEPRESSIONS TO MEET FINISH GRADES. LIMIT FINISH GRADING TO AREAS THAT CAN BE PLANTED IN THE IMMEDIATE FUTURE.
5. MOISTEN PREPARED AREA BEFORE PLANTING IF SOIL IS DRY. WATER THOROUGHLY AND ALLOW SURFACE TO DRY BEFORE PLANTING. DO NOT CREATE MUDDY SOIL.
6. BEFORE PLANTING, OBTAIN DESIGN PROFESSIONAL'S ACCEPTANCE OF FINISH GRADING; RESTORE PLANTING AREAS IF ERODED OR OTHERWISE DISTURBED AFTER FINISH GRADING.
7. DO NOT SOW IMMEDIATELY FOLLOWING RAIN, OR WHEN GROUND IS TOO DRY. TEMPERATURE SHALL BE BETWEEN 55 F AND 45 F FOR A 24 HOUR PERIOD. WIND SHALL BE LESS THAN 5 MPH.

TURF AREA PREPARATION NOTES:

1. LIMIT TURF SUBGRADE PREPARATION TO AREAS TO BE PLANTED.
2. NEWLY GRADED SUBGRADES: LOOSEN SUBGRADE TO A MINIMUM DEPTH OF 4 INCHES. REMOVE STONES LARGER THAN 1 INCH IN ANY DIMENSION AND STICKS, ROOTS, RUBBISH, AND OTHER EXTRANEOUS MATTER AND LEGALLY DISPOSE OF THEM OFF OWNER'S PROPERTY.
3. SPREAD PLANTING SOIL OVER LOOSENED SUBGRADE.
4. REDUCE ELEVATION OF PLANTING SOIL TO ALLOW FOR SOIL THICKNESS OF SOD.
5. UNCHANGED SUBGRADES: IF TURF IS TO BE PLANTED IN AREAS UNALTERED OR UNDISTURBED BY EXCAVATING, GRADING, OR SURFACE-SOIL STRIPPING OPERATIONS, PREPARE SURFACE SOIL AS FOLLOWS:
   A. REMOVE EXISTING GRASS, VEGETATION, AND TURF. DO NOT MIX INTO SURFACE SOIL.
   B. LOOSEN SURFACE SOIL TO A DEPTH OF AT LEAST 6 INCHES. APPLY SOIL AMENDMENTS AND FERTILIZERS ACCORDING TO PLANTING SOIL MIX PROPORTIONS AND MIX THOROUGHLY INTO TOP 6 INCHES OF SOIL. TILL SOIL TO A HOMOGENEOUS MIXTURE OF FINE TEXTURE.
6. APPLY SOIL AMENDMENTS DIRECTLY TO SURFACE SOIL BEFORE LOOSENING.
   A. REMOVE STONES LARGER THAN 1 INCH IN ANY DIMENSION AND STICKS, ROOTS, TRASH, AND OTHER EXTRANEOUS MATTER.
   B. LEGALLY DISPOSE OF WASTE MATERIAL, INCLUDING GRASS, VEGETATION, AND TURF, OFF OWNER'S PROPERTY.
7. FINISH GRADING: GRADE PLANTING AREAS TO A SMOOTH, UNIFORM SURFACE PLANE WITH LOOSE, UNIFORMLY FINE TEXTURE. GRADE TO WITHIN PLUS OR MINUS 1/2 INCH OF FINISH ELEVATION. ROLL AND RAKE, REMOVE RIDGES, AND FILL DEPRESSIONS TO MEET FINISH GRADES. LIMIT FINISH GRADING TO AREAS THAT CAN BE PLANTED IN THE IMMEDIATE FUTURE.
8. MOISTEN PREPARED AREA BEFORE PLANTING IF SOIL IS DRY. WATER THOROUGHLY AND ALLOW SURFACE TO DRY BEFORE PLANTING. DO NOT CREATE MUDDY SOIL.
9. BEFORE PLANTING, OBTAIN DESIGN PROFESSIONAL'S ACCEPTANCE OF FINISH GRADING; RESTORE PLANTING AREAS IF ERODED OR OTHERWISE DISTURBED AFTER FINISH GRADING.

TOPSOIL NOTES

1. TOPSOIL REQUIREMENTS: ASTM D 5268, PH RANGE OF 5.5 TO 7.0, FOUR PERCENT ORGANIC MATERIAL MINIMUM, FREE OF STONES 1/2 INCH OR LARGER IN ANY DIMENSION, AND OTHER EXTRANEOUS MATERIALS HARMFUL TO PLANT GROWTH.
2. TOPSOIL SOURCE: STRIP EXISTING TOPSOIL FROM ALL AREAS OF THE SITE TO BE DISTURBED. TOPSOIL SHALL BE FERTILE, FRIABLE, NATURAL LOAM, SURFACE SOIL, REASONABLY FREE OF SUBSOIL, CLAY LUMPS, BRUSH, WEEDS AND OTHER LITTER, AND FREE OF ROOTS, STUMPS, ORGANIC MATTER LARGER THAN 2 INCHES IN ANY DIMENSION, AND OTHER EXTRANEOUS OR TOXIC MATTER HARMFUL TO PLANT GROWTH. TOPSOIL SHALL BE SCREENED TO ACHIEVE THIS REQUIREMENT.
3. REPRESENTATIVE SAMPLES SHALL BE TESTED FOR ACIDITY, FERTILITY AND GENERAL TEXTURE BY A RECOGNIZED COMMERCIAL OR GOVERNMENT AGENCY AND COPIES OF THE TESTING AGENCY'S FINDINGS AND RECOMMENDATIONS SHALL BE FURNISHED TO THE ARCHITECT'S REPRESENTATIVE BY THE CONTRACTOR. ALL TOPSOIL SHALL BE AMENDED TO ACHIEVE SPECIFIED PH AND ORGANIC REQUIREMENTS. RE-TEST TOPSOIL PRIOR TO FINAL COMPLETION TO ENSURE REQUIREMENTS HAVE BEEN MET. NO TOPSOIL SHALL BE PLACED WHILE IN A FROZEN OR MUDDY CONDITION.
4. PLACE TOPSOIL IN AREAS WHERE REQUIRED TO OBTAIN THICKNESS AS SCHEDULED. PLACE TOPSOIL DURING DRY WEATHER. PROVIDE ADDITIONAL IMPORTED TOPSOIL REQUIRED TO BRING SURFACE TO PROPOSED FINISH GRADE, AS REQUIRED.
5. COMPACTED TOPSOIL THICKNESS AT THE FOLLOWING AREAS:
   A. LAWN AREAS: 12 INCHES MINIMUM OR AS NECESSARY TO ACHIEVE EVEN GRADES WITH SURROUNDING LAWN AREAS.
   B. PLANTER BEDS: 18 INCHES MINIMUM
6. FINE GRADE TOPSOIL TO SMOOTH, EVEN SURFACE WITH LOOSE, UNIFORMLY FINE TEXTURE. REMOVE RIDGES AND FILL DEPRESSIONS, AS REQUIRED TO MEET FINISH GRADES. FINISH GRADE OF TOPSOIL SHALL BE 2" BELOW FINISH GRADE OF PAVEMENTS AREAS FOR SOD AND 1" FOR SEED.
7. TOPSOIL STOCKPILE LOCATIONS TO BE COVERED COORDINATE WITH EROSION AND SEDIMENT CONTROL PLAN.
8. ALL GRAVEL, SUBBASE, AND OTHER IMPORTED FILL MATERIALS OTHER THAN TOPSOIL SHALL ONLY BE STOCKPILED IN PROPOSED IMPERVIOUS AREAS. NO GRAVEL OR ROCK MATERIALS SHALL BE STOCKPILED OR TEMPORARILY PLACED IN PROPOSED LANDSCAPE AREAS TO PREVENT LANDSCAPE AREAS FROM BEING CONTAMINATED WITH ROCK MATERIALS. CONTRACTOR SHALL SUBMIT A DETAILED STOCKPILE PLAN TO DESIGN PROFESSIONAL AND OWNER FOR APPROVAL PRIOR TO ANY EARTHWORK OPERATIONS.

WEED ABATEMENT NOTES:

1. ALL AREAS TO BE PLANTED OR HYDROSEEDED SHALL HAVE WEED ABATEMENT OPERATIONS PERFORMED ON THEM PRIOR TO PLANTING OR HYDROSEEDING.
2. CONTRACTOR SHALL SPRAY ALL EXPOSED WEEDS WITH @ROUND-UP® (CONTACT HERBICIDE) OR APPROVED EQUAL.
3. DO NOT WATER FOR AT LEAST SEVEN (7) DAYS. REMOVE EXPOSED WEEDS FROM THE SITE.
4. CONTRACTOR SHALL OPERATE THE AUTOMATIC IRRIGATION SYSTEM FOR A PERIOD OF FOURTEEN (14) DAYS. AT CONCLUSION OF THIS WATERING PERIOD, DISCONTINUE WATERING FOR THREE TO FIVE (3-5) DAYS.
5. APPLY SECOND APPLICATION OF @ROUND-UP® TO ALL EXPOSED WEEDS. APPLY IN STRICT CONFORMANCE WITH MANUFACTURER'S SPECIFICATIONS AND INSTRUCTIONS. DO NOT WATER FOR AT LEAST SEVEN (7) DAYS. REMOVE WEEDS FROM THE SITE.
6. IF ANY EVIDENCE OF WEED GERMINATION EXISTS AFTER TWO (2) APPLICATIONS, CONTRACTOR SHALL BE DIRECTED TO PERFORM A THIRD APPLICATION.
7. AT THE TIME OF PLANTING AND HYDROSEEDING, ALL PLANTING AREAS SHALL BE WEED FREE.

SEED AREA PREPARATION NOTES:

1. LIMIT TURF SUBGRADE PREPARATION TO AREAS TO BE PLANTED.
2. NEWLY GRADED SUBGRADES: LOOSEN SUBGRADE TO A MINIMUM DEPTH OF 4 INCHES. REMOVE STONES LARGER THAN 1 INCH IN ANY DIMENSION AND STICKS, ROOTS, RUBBISH, AND OTHER EXTRANEOUS MATTER AND LEGALLY DISPOSE OF THEM OFF OWNER'S PROPERTY.
   A. SPREAD PLANTING SOIL TO A DEPTH OF 9 INCHES IN TURF AREAS AND 18 INCHES AT SHRUB BED AREAS BUT NOT LESS THAN REQUIRED TO MEET FINISH GRADES AFTER LIGHT ROLLING AND NATURAL SETTLEMENT. DO NOT SPREAD IF PLANTING SOIL OR SUBGRADE IS FROZEN, MUDDY, OR EXCESSIVELY WET.

1. SPREAD PLANTING SOIL OVER LOOSENED SUBGRADE.
2. REDUCE ELEVATION OF PLANTING SOIL TO ALLOW FOR SOIL THICKNESS OF SOD.
3. UNCHANGED SUBGRADES: IF TURF IS TO BE PLANTED IN AREAS UNALTERED OR UNDISTURBED BY EXCAVATING, GRADING, OR SURFACE-SOIL STRIPPING OPERATIONS, PREPARE SURFACE SOIL AS FOLLOWS:
   A. REMOVE EXISTING GRASS, VEGETATION, AND TURF. DO NOT MIX INTO SURFACE SOIL.
   B. LOOSEN SURFACE SOIL TO A DEPTH OF AT LEAST 6 INCHES. PROVIDE WEED ABATEMENT PROCEDURE. APPLY SOIL AMENDMENTS AND FERTILIZERS ACCORDING TO PLANTING SOIL MIX PROPORTIONS AND MIX THOROUGHLY INTO TOP 6 INCHES OF SOIL. TILL SOIL TO A HOMOGENEOUS MIXTURE OF FINE TEXTURE.
1. APPLY SOIL AMENDMENTS DIRECTLY TO SURFACE SOIL BEFORE LOOSENING.
   C. REMOVE STONES LARGER THAN 1 INCH IN ANY DIMENSION AND STICKS, ROOTS, TRASH, AND OTHER EXTRANEOUS MATTER.
   D. LEGALLY DISPOSE OF WASTE MATERIAL, INCLUDING GRASS, VEGETATION, AND TURF, OFF OWNER'S PROPERTY.
4. FINISH GRADING: GRADE PLANTING AREAS TO A SMOOTH, UNIFORM SURFACE PLANE WITH LOOSE, UNIFORMLY FINE TEXTURE. GRADE TO WITHIN PLUS OR MINUS 1/2 INCH OF FINISH ELEVATION. ROLL AND RAKE, REMOVE RIDGES, AND FILL DEPRESSIONS TO MEET FINISH GRADES. LIMIT FINISH GRADING TO AREAS THAT CAN BE PLANTED IN THE IMMEDIATE FUTURE.
5. MOISTEN PREPARED AREA BEFORE PLANTING IF SOIL IS DRY. WATER THOROUGHLY AND ALLOW SURFACE TO DRY BEFORE PLANTING. DO NOT CREATE MUDDY SOIL.
6. BEFORE PLANTING, OBTAIN DESIGN PROFESSIONAL'S ACCEPTANCE OF FINISH GRADING; RESTORE PLANTING AREAS IF ERODED OR OTHERWISE DISTURBED AFTER FINISH GRADING.
7. DO NOT SOW IMMEDIATELY FOLLOWING RAIN, OR WHEN GROUND IS TOO DRY. TEMPERATURE SHALL BE BETWEEN 55 F AND 45 F FOR A 24 HOUR PERIOD. WIND SHALL BE LESS THAN 5 MPH.
8. TURF SEED SHALL BE SOWN AT A RATE PER SEED SUPPLIER RECOMMENDATIONS.
9. SEED SHALL BE HYDROSEEDED OR DRILL SEEDED AT THE CONTRACTORS OPTION. AREAS WITH A 4:1 OR GRATER SLOPE SHALL BE HYDROSEEDED.

DRYLAND SEEDING REQUIREMENTS

<u>GENERAL OVERVIEW</u>

THIS REPORT OUTLINES RECOMMENDED REVEGETATION AND SLOPE STABILIZATION MEASURES FOR DISTURBED CUT AND FILL SLOPES WITHIN THE PROJECT LIMITS AS DEFINED ON THE ACCOMPANYING PLAN WHICH WILL BE SEEDED WITH THE DRYLAND SEED MIX AND NOT IRRIGATED. THESE RECOMMENDATIONS ARE MADE TO PREVENT SHORT TERM AND LONG TERM SOIL EROSION AS WELL AS TO PROVIDE AN AESTHETIC REVEGETATION WHICH WILL BLEND WITH THE EXISTING NATURAL SURROUNDING AREA. THE MEASURES INCLUDE REVEGETATION AND HYDROMULCHING PROCEDURES FOLLOWING TOPSOIL DISTRIBUTION AND FINE GRADING. THE AREA TO BE REVEGETATED CONSISTS OF ALL DISTURBED AREAS RELATED TO GRADING FOR CONSTRUCTION AND ANY OTHER AREAS DISTURBED IN THE PROCESS OF CONSTRUCTION. THE SLOPES TO BE AFFECTED VARY WIDELY IN DEGREE AND ASPECT.

<u>GENERAL EARTHWORK</u>

ALL WORK SHALL BE LIMITED TO THE AREA REQUIRED FOR CONSTRUCTION WITH MINIMAL, IF ANY, DISTURBANCE TO THE SURROUNDING NATURAL SLOPE OR VEGETATION. ALL FINISHED GRADES SHALL BE SMOOTH AND ROUNDED TO ENSURE A NATURAL TRANSITION BETWEEN NEW AND EXISTING GRADES. REFER TO GRADING AND DRAINAGE PLANS FOR ADDITIONAL REQUIREMENTS.

<u>SITE PREPARATION</u>

EARTHWORK PROCESS SHOULD BEGIN WITH CLEARING LARGE SHRUBS FROM THE AREAS TO BE DISTURBED. WOODY STEMS AND BRANCHES SHALL BE CHIPPED ON SITE TO IMPROVE THE AMOUNT OF ORGANIC MATERIAL IN THE TOP SOIL. NATURAL TOPSOIL OCCURS AT VARYING DEPTHS ON THE PROJECT SITE. THE TOPSOIL SHOULD BE EXCAVATED AND STOCKPILED AT DESIGNATED STORAGE AREAS PRIOR TO THE PROPOSED GRADING OPERATIONS.

<u>TOPSOIL DISTRIBUTION</u>

ONCE THE GENERAL EARTHWORK IS COMPLETE AND ROUGH GRADING HAS BEEN ACCOMPLISHED, THE TOPSOIL SHOULD BE REDISTRIBUTED OVER THE AREA TO MINIMUM DEPTHS AS SPECIFIED. WHERE NEEDED, SLOPES SHOULD BE GRADED WITH SERRATION TO HOLD TOPSOIL ADEQUATELY. TOPSOIL SHOULD BE SPREAD AND LIGHTLY COMPACTED UTILIZING A SMALL CLEATED TRACTOR MOVING PERPENDICULAR TO THE CONTOURS OR ANOTHER METHOD WITH EQUAL CAPABILITY. IT IS OUR RECOMMENDATION THAT ANY NECESSARY MECHANICAL MEANS OF EROSION CONTROL BE IN PLACE PRIOR TO BEGINNING SITE DISTURBANCE.

ONCE TOPSOIL HAS BEEN DISTRIBUTED AND GRADED, REVEGETATION SEEDING SHALL FOLLOW IMMEDIATELY. IN ORDER TO ELIMINATE SURFACE CRUSTING AND TO FACILITATE BETTER ROOT PENETRATION, THE SURFACE SHOULD BE SCARIFIED PRIOR TO SEEDING.

<u>SEEDING</u>

APPLY SEED TO THE PROJECT SITE BY HYDROSEEDING.
THE FOLLOWING INFORMATION PROVIDES MATERIAL AND EXECUTION FOR SEEDING.

<u>SEED MIXTURE:</u>	<u>RATE: PURE LIVE SEED LBS / ACRE</u>
WESTERN YARROW	0.12
FIRECRACKER PENSTEMON	0.24
BLUE FLAX	2.52
CALIFORNIA POPPY	2.52
SHEEP FESCUE	1.80
IDAHO FESCUE	2.40
SANDBURG BLUEGRASS	1.20
ROCKY MOUNTAIN PENSTEMON	1.20
TOTAL SEED	INSTALL @ 12 LBS / ACRE

<u>FIBER MULCH MATERIAL</u>

GROW NUTRIBASE FROM QUATTRO ENVIRONMENTAL, A COMPOSTED POULTRY BASED MULCH MATERIAL FREE OF GROWTH OR GERMINATION INHIBITING INGREDIENTS. APPLY AT THE RATE OF 2000 LBS. PER ACRE.

<u>ORGANIC SOIL AMENDMENT</u>

GROW NUTRIBOOST FROM QUATTRO ENVIRONMENTAL (OR APPROVED EQUAL) APPLIED AT 5 GALLONS PER ACRE.

<u>TACKIFIER</u>

MULCH TACKIFIER SOIL STABILIZER - ECOLOGY CONTROLS M-BINDER.
TACKIFIER APPLIED AT THE RATE OF 80 LBS. PER ACRE.
GRANITE SEED
1647 WEST 2100 NORTH
P.O. BOX 177
LEHI, UTAH 84043
1-800-768-4433
(OR APPROVED EQUAL)

<u>HYDROSEEDING</u>

MIX SPECIFIED SEED AND ORGANIC SOIL AMENDMENT IN WATER PER MANUFACTURER'S RECOMMENDATIONS. APPLY SEEDED SLURRY EVENLY IN TWO INTERSECTION DIRECTIONS. DO NOT HYDROSEED AREA IN EXCESS OF THAT WHICH CAN BE MULCHED ON SAME DAY. KEEP OFF ROADS, WALKS, STRUCTURES AND AREAS NOT TO BE SEEDED. CLEAN UP THESE AREAS. AFTER HYDROSEED, TRACK IN SEED USING A CLEATED CRAWLER WITH TRACK MARKS PERPENDICULAR TO THE SLOPE. AFTER TRACKED, MULCH SLOPE WITH 2000 LBS. PER ACRE OF FERTILE-FIBER MULCH MATERIAL AND 80 LBS. PER ACRE OF TACKIFIER.

<u>MAINTENANCE</u>

IMMEDIATELY RESEED AREAS WHICH SHOW BARE SPOTS. MINIMUM ACCEPTABLE PLANT COVERAGE IS 80 PERCENT AFTER ONE GROWING SEASON. PROTECT SEEDED AREAS WITH WARNING SIGNS DURING MAINTENANCE PERIOD. THE SEED WILL REQUIRE APPROXIMATELY NINETY (90) DAYS OF FAVORABLE GROWING CONDITIONS TO GERMINATE AND BECOME ESTABLISHED FOR SUCCESSFUL SURVIVAL WITH NORMAL MINIMAL SUMMER PRECIPITATION.

<u>SEEDING TIME</u>

THE OPTIMAL SEEDING TIME SHALL BE IN FALL, BETWEEN MID SEPTEMBER AND MID OCTOBER. IF SEEDING IS APPLIED TOO EARLY OR TOO LATE AND PROPER GERMINATION IS NOT REALIZED PRIOR TO FALL DORMANCY, THEN RESEEDING SHALL BE APPLIED IN EARLY SPRING, AS SOON AS SOIL IS WORKABLE (NOT MUDDY) BETWEEN MARCH AND MID MAY. THIS PLANTING TIME PROVIDES THE OPTIMUM WEATHER CONDITIONS FOR SEED GERMINATION AND SEEDLING SURVIVAL RATE. SEEDING AFTER NOVEMBER 20, 'DORMANT SEEDING' INSURES THAT THE SEED DOES NOT GERMINATE PRIOR TO FREEZING WINTER TEMPERATURES AND SEED SHOULD BE IN PLACE FOR THE EARLY SPRING RAINS.

<u>WATER</u>

THE CONTRACTOR WILL PROVIDE SUPPLEMENTAL WATER TO ENSURE PROPER SEED GERMINATION.

<u>FERTILIZATION</u>

FERTILIZATION IS <u>NOT</u> RECOMMENDED FOR RECLAMATION SEEDING DUE TO PROMOTION OF WEED COMPETITION. IF WEEDS ARE APPARENT, CONTACT DESIGN PROFESSIONAL FOR WEED REMOVAL REQUIREMENTS.

<u>EROSION CONTROL</u>

UNDER NORMAL CIRCUMSTANCES AND ADHERENCE TO THE CONSTRUCTION PRACTICES DESCRIBED IN THE SPECIFICATIONS, THE ABOVE RECOMMENDED EROSION CONTROL MEASURE SHOULD PROVIDE A STABLE SLOPE CONDITION. TO AVOID INCIDENTAL EROSION, IT IS IMPERATIVE THAT THE SLOPES, ONCE PREPARED, REMAIN UNDISTURBED UNTIL SEEDING GERMINATES AND IS ESTABLISHED.

AN 80% VEGETATION COVER IS RECOMMENDED TO CONTROL EROSION. SURFACE CONDITIONS SHOULD BE MONITORED DAILY. IF EROSION DETRIMENTAL TO THE SLOPE IS OBSERVED OR ANTICIPATED DUE TO EXCESSIVE RAINFALL, REMEDIAL MEASURES SHALL BE IMPLEMENTED AS REQUIRED. REFER TO THE STORM WATER POLLUTION PREVENTION PLAN FOR ADDITIONAL REQUIREMENTS.

811 Know what's below. Call before you dig.
CALL 2 BUSINESS DAYS IN ADVANCE BEFORE YOU DIG, GRADE, OR EXCAVATE FOR THE MARKING OF UNDERGROUND MEMBER UTILITIES

BRECKON landdesign
• Civil Engineering
• Landscape Architecture
• Erosion & Sediment Control
• Graphic Communication
• Irrigation Design
• Land Planning
www.breckonlanddesign.com
Fax: (208) 376-8539
Phone: 208-376-5153
6661 North Glenwood Street
Garden City, Idaho 83714

STATE OF IDAHO — JON FRITZ BRECKON — LA-16536 — 2/18/2025 — LANDSCAPE ARCHITECT

DATE	

PHASE 1 PART B FOR:
TWIN FALLS COUNTY - WRIGHT AVE JAIL
2515 Wright Ave, Twin Falls, ID 83301
LANDSCAPE DETAILS

Laughlin Ricks Architecture
architecture/planning
134 3RD Ave East, * Twin Falls, Idaho 83301
(208) 736-8050

DATE: 2/18/2025
CI — Drawn
JB — Checked
#23029-1B — PROJECT #

SL1.5

S:_projects\2024\24051 tf county jail imp\CAD\sheets\24051 landscape.dwg plotted by: civerson on Mon, March 3 2025 at 11:28 AM

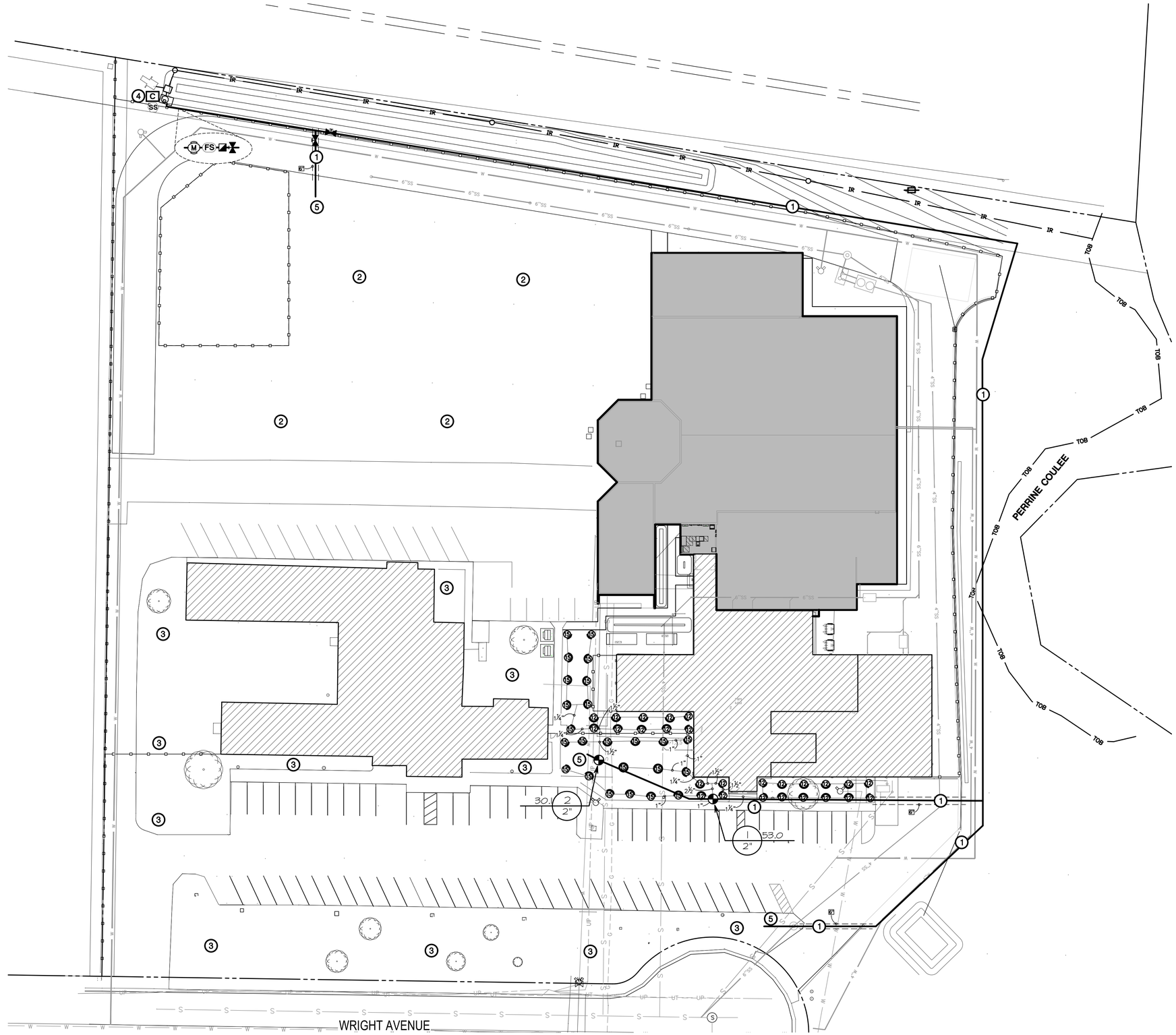

IRRIGATION PLAN

SCALE: 1"= 30'-0"

Know what's below. Call before you dig.

CALL 2 BUSINESS DAYS IN ADVANCE BEFORE YOU DIG, GRADE, OR EXCAVATE FOR THE MARKING OF UNDERGROUND MEMBER UTILITIES

BRECKON landdesign

- Civil Engineering
- Landscape Architecture
- Erosion & Sediment Control
- Graphic Communication
- Irrigation Design
- Land Planning

www.breckonlanddesign.com
Fax: 208.376.6539
Phone: 208-376-5153
6661 North Glenwood Street
Garden City, Idaho 83714

IRRIGATION SYSTEM NON-POTABLE WATER NOTES

1. ALL VALVE BOXES, QUICK COUPLER VALVES, SPRINKLER HEAD COVERS, AND AUTOMATIC CONTROL VALVES SHALL BE PURPLE TINTED IDENTIFICATION MATERIAL, MARKED WITH "DO NOT DRINK" WARNING.
2. INSTALL FINDER TAPE OVER ALL IRRIGATION MAINS. TAPE SHALL BE 2" WIDE, METALLIC PURPLE IN COLOR, WITH THE WORDS "DANGER - UNSAFE WATER" OR "NON-POTABLE WATER" CLEARLY MARKED ALONG THE LENGTH OF THE TAPE. TAPE SHALL BE PLACED BETWEEN SIX INCHES (6") AND EIGHTEEN INCHES (18") BELOW THE SURFACE, DIRECTLY ABOVE THE TOP OF THE PIPE.

CAUTION NOTICE

THE CONTRACTOR IS SPECIFICALLY CAUTIONED THAT THE LOCATION AND/OR ELEVATION OF EXISTING UTILITIES AS SHOWN ON THESE PLANS IS BASED ON RECORDS OF THE VARIOUS UTILITY COMPANIES AND, WHERE POSSIBLE, MEASUREMENTS TAKEN IN THE FIELD. THE INFORMATION IS NOT TO BE RELIED ON AS BEING EXACT OR COMPLETE. THE CONTRACTOR MUST CALL THE LOCAL UTILITY LOCATION CENTER AT LEAST 48 HOURS BEFORE ANY EXCAVATION TO REQUEST EXACT FIELD LOCATIONS OF THE UTILITIES. IT SHALL BE THE RESPONSIBILITY OF THE CONTRACTOR TO RELOCATE ALL EXISTING UTILITIES WHICH CONFLICT WITH THE PROPOSED IMPROVEMENTS SHOWN ON THE PLANS.

IRRIGATION SCHEDULE

SYMBOL	MANUFACTURER/MODEL/DESCRIPTION
12 Q 12 T 12 H 12 F	Hunter PROS-04-PRS40-CV-F 12, 15 & 17 Series Turf Spray, 40psi regulated 4in. Pop-Up with factory installed Drain Check Valve & Flowguard. Co-molded wiper seal with UV Resistant Material. See Detail 9/SL2.5
30	Rain Bird 5004-PC-R-MPR 30 & 35 Turf Rotor, 4in. Pop-Up, Plastic Riser, Matched Precipitation Rotor (MPR nozzle). Arc and Radius as per Symbol. 25 ft=red, 30 ft=green, 35ft=beige. Pressure Regulating. See Detail 7/SL2.5
	Hunter ICV-G-R In., 1-1/2in., 2in., and 3in. Plastic Electric Remote Control Valves, Globe Configuration, with NPT Threaded Inlet/Outlet, for Commercial/Municipal Use. With Reclaimed Water ID, Purple Handle. See detail 10/SL2.5
	Hunter HQ-33DLRC-R Quick coupler valve, purple locking rubber cover for reclaimed water use, red brass and stainless steel, with 3/4in. NPT inlet, 2-piece body. See Detail 4/SL2.5
	'Mueller' Brass Valve or approved equal. Threaded. See Detail 8/SL2.5
M	Hunter ICV-G-FS-R Same size as mainline. Plastic Electric Master Valve, Globe Configuration, with NPT Threaded Inlet/Outlet, for Commercial/Municipal Use. With Filter Sentry Factory Installed Option, and Reclaimed Water ID, Purple Handle. See Detail 2/SL2.5
C	Hunter A2C-75D-PP 75-Station Decoder controller on a Plastic Pedestal. Field verify the existing and additional station count to insure a functional, complete system. See Detail 1/SL2.5
SS	Hunter Solar-Sync Solar, rain freeze sensor with outdoor interface, connects to Hunter PCC, Pro-C, and I-Core Controllers, install as noted, includes 10 year lithium battery and rubber module cover, and gutter mount bracket. Wired.
FS	Hunter HFS-200 Flow Sensor for use with ACC controller, same size as mainline. Schedule 40 Sensor Body, 24 VAC, 2 amp. See Detail 3/SL2.5
———	3" Irrigation Mainline: PVC Schedule 40. See Detail 5&6/SL2.5
- - - - - - - -	Pipe Sleeve: PVC Schedule 40.

CALLOUT LEGEND

1. FIELD VERIFY THE EXISTING MAINLINE SIZE AND LOCATION. CONTRACTOR IS RESPONSIBLE TO PROVIDE ALL MATERIALS AND FITTINGS TO CONNECT NEW MAINLINE TO EXISTING MAINLINE. NEW MAINLINE SIZE TO MATCH EXISTING MAINLINE SIZE. ENSURE A WATERTIGHT AND FUNCTIONAL CONNECTION.
2. CONTRACTOR IS RESPONSIBLE TO FIELD VERIFY EXISTING CONDITIONS AND PROVIDE NEW MATERIALS TO MATCH EXISTING AND ENSURE HEAD TO HEAD COVERAGE. REUSE EXISTING SYSTEM AS MUCH AS POSSIBLE. ENSURE A FULLY FUNCTIONAL WATER TIGHT SYSTEM AND CONNECT TO NEW CONTROLLER.
3. FIELD LOCATE AND CONNECT EXISTING ZONES TO NEW MAINLINE AND NEW CONTROLLER. ENSURE FULLY FUNCTIONING CONNECTIONS. ENSURE HEAD TO HEAD COVERAGE AND FULLY OPERATIONAL. CONTRACTOR SHALL BE RESPONSIBLE TO PROVIDE AS BUILT DRAWING OF EXISTING TO REMAIN AND PROPOSED NEW LAYOUT FOR REVIEW AND APPROVAL.
4. INSTALL NEW CONTROLLER IN THIS APPROXIMATE LOCATION. FIELD VERIFY CONTROLLER CAPACITY WITH EXISTING SYSTEM AND ADDITIONAL SYSTEM REQUIREMENTS. ENSURE A FULLY FUNCTIONING SYSTEM.ALL ABOVE GRADE WIRES SHALL BE LOCATED IN PVC CONDUIT. ENSURE A FULLY FUNCTIONAL SYSTEM BEFORE TRENCHING IS BURIED.
5. SPLICE EXISTING CONTROL WIRES AT NEW MAINLINE INTERSECTION AND CONNECT TO NEW CONTROL VALVES ON NEW MAINLINE AS REQUIRED. LOCATE ALL SPLICES IN 10" ROUND VALVE BOX WITH BLACK LID. ALL OTHER WIRES ARE TO REMAIN UNTOUCHED.

STATE OF IDAHO — JOHN FRITZ BRECKON — LA-16536 — 2/18/2025 — LANDSCAPE ARCHITECT

DATE

PHASE 1 PART B FOR:

TWIN FALLS COUNTY - WRIGHT AVE JAIL

2515 Wright Ave, Twin Falls, ID 83301

IRRIGATION PLAN

Laughlin Ricks Architecture
architecture/planning
134 3RD Ave East, * Twin Falls, Idaho 83301
(208) 736-8050

DATE: 2/18/2025

CI — Drawn
JB — Checked

#23029-1B
PROJECT #

SL2.0

S:_projects\2024\24051 tf county jail imp\CAD\sheets\24051 irrigation.dwg plotted by: civerson on Mon, March 3, 2025 at 11:29 AM

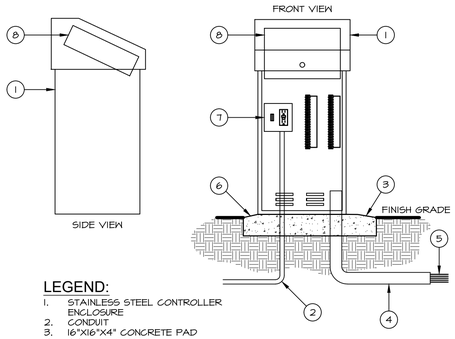

LEGEND:

1. STAINLESS STEEL CONTROLLER ENCLOSURE
2. CONDUIT
3. 16"X16"X4" CONCRETE PAD
4. 24 VOLT CONDUIT
5. TO CONTROL VALVES
6. SLOPE AWAY FROM CONTROLLER
7. CONTROLLER SUBASSEMBLY (CSA) INCLUDES GFI & TERMINAL STRIPS WITH PLACARDS
8. AUTOMATIC CONTROLLER

1 AUTOMATIC CONTROLLER PEDESTAL MOUNT

NOT TO SCALE

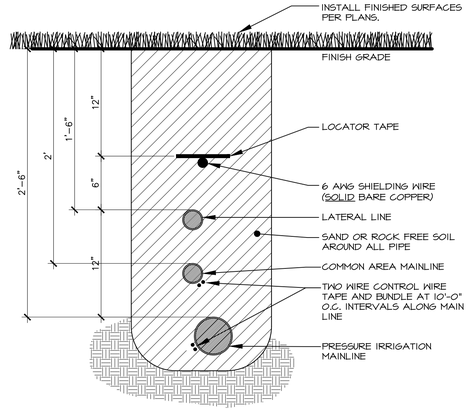

5 TRENCH SECTION

Scale: 1-1/2"= 1'-0"

IRRIGATION NOTES

1. SYSTEM DESIGN BASED ON THE ASSUMPTION OF THE AVAILABILITY OF 120 G.P.M. WITH 85 P.S.I. AT THE SOURCE AND 45 P.S.I. AT THE HEADS.
2. ALL LATERAL LINES THAT ARE NOT LABELED SHALL BE 3/4" DIAMETER.
3. CONTRACTOR TO VERIFY LOCATION OF ALL UTILITIES PRIOR TO INITIATION OF ANY DEMOLITION OR CONSTRUCTION OPERATIONS. ANY DAMAGE TO EXISTING UTILITIES SHALL BE CONTRACTOR'S RESPONSIBILITY.
4. COORDINATE ALL IRRIGATION INSTALLATION OPERATIONS WITH CIVIL, MECHANICAL, AND ELECTRICAL ENGINEERING SHEETS.
5. CONTRACTOR SHALL COORDINATE INSTALLATION OF IRRIGATION CONDUIT AND SLEEVES UNDER HARD SURFACES WITH RESPECTIVE CONTRACTORS.
6. ALL SLEEVES SHALL BE INSTALLED AS PART OF IRRIGATION CONTRACT. APPROXIMATE LOCATION OF SLEEVES ARE SHOWN ON THE IRRIGATION PLAN. FIELD VERIFY LOCATION. ALL ENDS OF SLEEVES SHALL BE TAPED OR CAPPED AND MARKED WITH A 2"X 4" PAINTED STAKE EXTENDING TO 24" ABOVE GRADE. STAKES SHALL NOT BE REMOVED UNTIL THE IRRIGATION SYSTEM IS COMPLETE. ALL SLEEVES SHALL EXTEND A MINIMUM OF 18" BEYOND BACK OF CURB OR EDGE OF PAVEMENT. PROVIDE COMPACTED BACKFILL AS NECESSARY AT HARD SURFACE LOCATIONS.
7. CONTRACTOR SHALL OBTAIN AND PAY FOR ALL PERMITS AND FEES REQUIRED FOR THIS WORK.
8. IRRIGATION CONTROLLER(S) ARE TO BE LOCATED AS SHOWN ON THE PLAN. CONTROLLERS SHALL BE WIRED TO POWER SUPPLY BY A LICENSED ELECTRICIAN PER LOCAL CODES. IRRIGATION CONTRACTOR TO PROVIDE ALL REQUIRED CONNECTIONS TO 24 VOLT IRRIGATION CONTROL WIRE INSIDE THE BUILDING THROUGH APPROPRIATE SIZED CONDUIT.
9. ALL HEADS ARE TO BE 4" POP-UP IN LAWN AREAS. IRRIGATED AREAS CONTAINING VEGETATION WHICH POTENTIALLY MAY IMPEDE PERFORMANCE OF A 4" POP-UP SPRINKLER ARE TO BE REPLACED WITH A 12" HIGH POP-UP SPRINKLER.
10. ALL ELECTRICAL WORK TO MEET OR EXCEED N.E.C., STATE CODES, LOCAL CODES, AND MANUFACTURER'S RECOMMENDATIONS.
11. CONTRACTOR SHALL REMOVE AND DISPOSE OF ALL ROCK AND DEBRIS BROUGHT TO THE SURFACE AS A RESULT OF TRENCHING OPERATIONS.
12. CONTRACTOR SHALL REFER TO SPECIFICATIONS AND DETAIL DRAWINGS FOR ADDITIONAL REQUIREMENTS.
13. ALL 24 VOLT POWER WIRES SHALL BE #14 AWG SOLID COPPER. ALL ABOVE GROUND 120 VOLT AND 24 VOLT WIRE SHALL BE IN PVC CONDUIT. ALL 24 VOLT CONTROL WIRES SHALL BE LOCATED IN A 3/4" CONDUIT.
14. INSTALLATION SHALL COMPLY WITH ALL NATIONAL, STATE, AND LOCAL LAWS AND ORDINANCES.
15. IRRIGATION CONTRACTOR SHALL PROVIDE A COMPLETE AS-BUILT DRAWING IN PDF FORMAT UPON COMPLETION OF INSTALLATION AND PRIOR TO FINAL PAYMENT.
16. THE ENTIRE SYSTEM SHALL BE GUARANTEED TO BE COMPLETE AND PERFECT IN EVERY DETAIL FOR A PERIOD OF ONE YEAR FROM THE DATE OF ITS ACCEPTANCE, REPAIR OR REPLACEMENT OF ANY DEFECTS OCCURRING WITHIN THAT ONE YEAR SHALL BE FREE OF EXPENSE TO THE OWNER.
17. AS PART OF THIS CONTRACT, PERFORM AT NO EXTRA COST WINTERIZATION AND SPRING START UP OF THE SYSTEM DURING THE GUARANTEE PERIOD (1 YEAR).
18. ALL MATERIALS SHALL BE NEW AND WITHOUT FLAWS OR DEFECTS OF THE QUALITY AND PERFORMANCE SPECIFIED, AND SHALL MEET THE REQUIREMENTS OF THIS SYSTEM. USE MATERIALS AS SPECIFIED, NO SUBSTITUTIONS SHALL BE PERMITTED WITHOUT PRIOR WRITTEN PERMISSION OF THE OWNER OR DESIGN PROFESSIONAL.
19. IRRIGATION CONTRACTOR SHALL MAKE NECESSARY MINOR FIELD ADJUSTMENTS TO SPRINKLER NOZZLES, SPRINKLERS, PIPE, AND OTHER IRRIGATION EQUIPMENT LOCATIONS TO FIT THE AS-BUILT SITE. ADJUST HEAD AND PIPE LOCATIONS AS REQUIRED TO AVOID DAMAGING EXISTING TREE ROOTS. ADJUSTMENTS SHALL ENSURE HEAD TO HEAD COVERAGE AND NOT OVER SPRAY THE BUILDING OR OTHER IMPROVEMENTS.
20. IRRIGATION PIPING LAYOUT IS SCHEMATIC. WHERE LINES ARE SHOWN BELOW PAVEMENT ADJACENT TO LANDSCAPE AREAS, THEY SHALL BE LOCATED IN THE LANDSCAPE AREA UNLESS SHOWN WITH A SLEEVE SYMBOL.
21. BASE PLAN AND LOCATION OF EXISTING EQUIPMENT ARE SCHEMATIC IN NATURE. FIELD VERIFY ALL BASE AND EXISTING IRRIGATION ELEMENTS AND CONDITIONS PRIOR TO CONSTRUCTION AND PROVIDE NECESSARY ADJUSTMENTS.
22. IRRIGATION CONTRACTOR SHALL USE THE MANUFACTURER'S APPROVED PRESSURE REGULATING MODULE AS SPECIFIED TO ADJUST ZONE OPERATING PRESSURES TO AN AVERAGE OF 30 P.S.I. IN SPRAY ZONES AND 45 P.S.I. IN ROTOR ZONES.
23. ALL MAIN LINE FITTINGS SHALL BE SCHEDULE 40 SOLVENT WELD TYPE UNLESS NOTED FOR LATERAL SERVICE.
24. IN THE EVENT OF A DISCREPANCY, IMMEDIATELY NOTIFY THE DESIGN PROFESSIONAL.
25. CONTRACTOR SHALL BE RESPONSIBLE TO PROVIDE CERTIFICATE OF COMPLETION IRRIGATION SCHEDULING, LANDSCAPE AND IRRIGATION MAINTENANCE SCHEDULES, IRRIGATION AUDIT, IRRIGATION SURVEY, AND IRRIGATION WATER USE ANALYSIS.

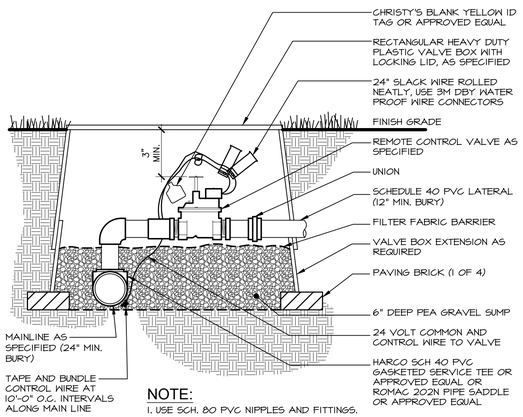

NOTE:

1. USE SCH. 80 PVC NIPPLES AND FITTINGS.

2 MASTER VALVE

NOT TO SCALE

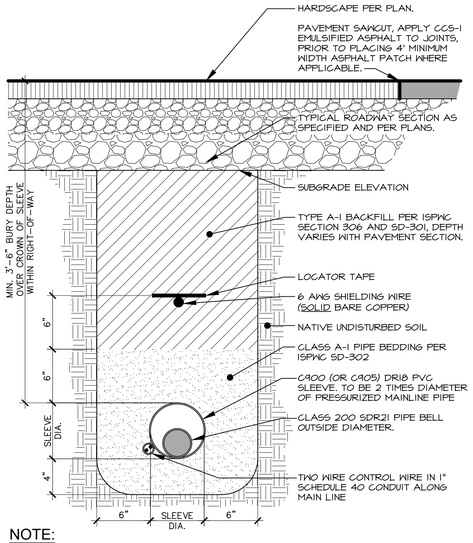

NOTE:

1. COORDINATE WITH OTHER CONTRACTORS TO INSTALL SLEEVE, CONDUIT, FINDER TAPE AND LOCATING WIRE PRIOR TO INSTALLATION OF ROADWAY IF APPLICABLE.
2. ROAD CROSSING INSTALLATION REQUIREMENTS APPLY WITH THE FULL EXTENT OF THE RIGHT-OF-WAY.
3. IN CASE OF CONFLICTS WITH OTHER UTILITIES, IRRIGATION SLEEVE SHALL CROSS BELOW OTHER UTILITIES.
4. THE CONTRACTOR SHALL CONSTRUCT ALL ROAD CROSSINGS OF THE IRRIGATION PIPE AND POTABLE WATER PIPE IN ACCORDANCE WITH THE IDAHO RULES FOR PUBLIC DRINKING WATER SYSTEMS AND THE ISPWC SD-407.

6 HARDSCAPE CROSSING TRENCH SECTION

Scale: 1-1/2"= 1'-0"

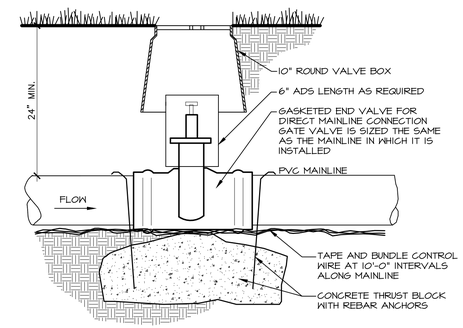

8 ISOLATION VALVE

NOT TO SCALE

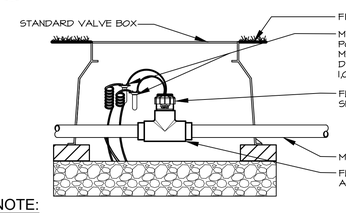

NOTE:

INLET PIPE LENGTH OF SENSOR MUST BE MIN. 10X PIPE DIA. STRAIGHT, CLEAN RUN OF PIPE, NO FITTINGS OR TURNS. OUTLET PIPE LENGTH OF SENSOR MUST BE MIN. 5X PIPE DIA. OF STRAIGHT CLEAN RUN OF PIPE, NO FITTINGS OR TURNS.

3 FLOW SENSOR

Scale: NTS

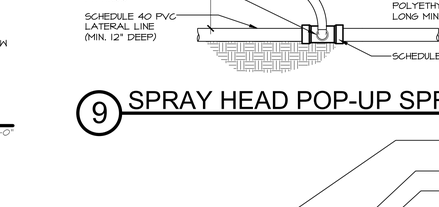

9 SPRAY HEAD POP-UP SPRINKLER

NOT TO SCALE

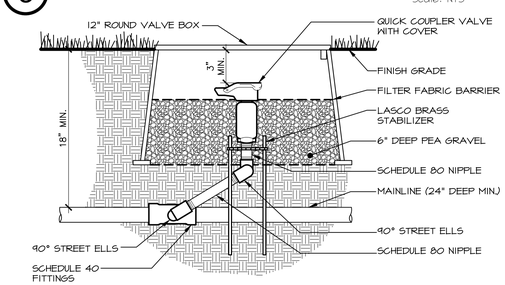

4 QUICK COUPLER VALVE

NOT TO SCALE

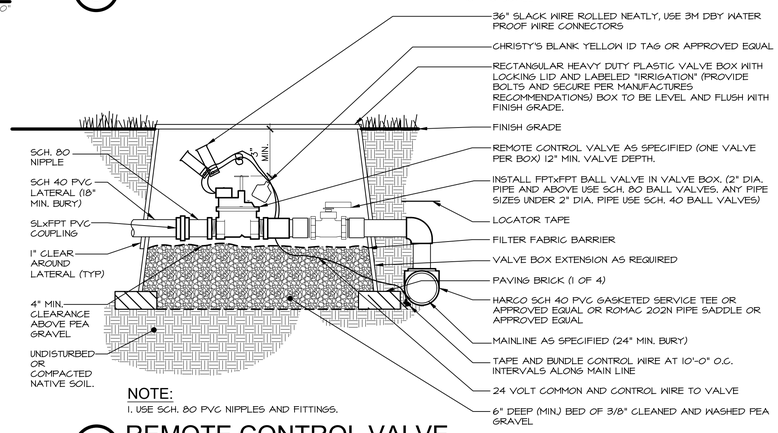

NOTE:

1. USE SCH. 80 PVC NIPPLES AND FITTINGS.

7 ROTOR POP-UP SPRINKLER

NOT TO SCALE

10 REMOTE CONTROL VALVE

NOT TO SCALE

SYSTEM OPERATIONAL NOTES

SYSTEM OPERATION:

(BASED ON HISTORICAL CLIMATE)

CONTROLLER SETUP:

A CYCLING TECHNIQUE WILL BE USED FOR APPLICATION OF WATER, EACH STATION RUN TIME WILL BE APPLIED WITH THREE (3) DIFFERENT START TIMES. THEREFORE STATION RUN TIMES REFLECT ONE THIRD (1/3) THE TOTAL APPLICATION. PEAK WATER APPLICATION WILL REQUIRE IRRIGATION EVERY NIGHT. SET CONTROLLERS FOR START TIME #1 AT 1:30P.M., START TIME #2 AT 12:00A.M., AND START TIME #3 AT 5:30A.M. EXTEND WATER WINDOW IF REQUIRED TO MEET PEAK WATER REQUIREMENTS.

INITIAL STATION RUN TIMES:

DRIP ZONES: SHRUBS - 10 MINUTE CYCLES. (3 CYCLES MINIMUM SPACED EVENLY THROUGHOUT WATER WINDOW AS NOTED ABOVE)
SPRAY ZONES: TURF - 5 MINUTE CYCLES.
ROTOR ZONES: TURF - 15 MINUTE CYCLES.

SYSTEM BALANCING:

AS THE SYSTEM OPERATES, SOME ZONES WILL BE WET WHILE OTHERS ARE DRY. ADJUST ONLY THOSE STATIONS WHICH REQUIRE ADDITIONAL OR LESS WATER. FOR EXAMPLE, IF STATION TS1, A 15' TURF SPRAY ZONE IS ALWAYS DRY, CHANGE THE STATION TS1 RUN TIME FROM FIFTEEN (15) MINUTES TO SIXTEEN (16) MINUTES. CONTINUE MAKING ADJUSTMENTS UNTIL THE ZONE MOISTURE CONTENT IS ACCEPTABLE. USE NOZZLE CHANGES OR NOZZLE SCREN ADJUSTMENTS TO ADJUST WET AND DRY AREAS WITHIN A ZONE.

S:_projects\2024\24051 tf county jail imp\CAD\sheets\24051 irrigation.dwg plotted by: civerson on Mon, March 3, 2025 at 11:29 AM

811 Know what's below. Call before you dig.
CALL 2 BUSINESS DAYS IN ADVANCE BEFORE YOU DIG, GRADE, OR EXCAVATE FOR THE MARKING OF UNDERGROUND MEMBER UTILITIES

BRECKON landdesign
• Civil Engineering
• Landscape Architecture
• Erosion & Sediment Control
• Graphic Communication
• Irrigation Design
• Land Planning
www.breckonlanddesign.com
Fax: (208) 376-8539
Phone: 208-376-5153
6661 North Glenwood Street
Garden City, Idaho 83714

STATE OF IDAHO
JON FRITZ BRECKON
Jon Breckon
LA-16536
2/18/2025
LICENSED LANDSCAPE ARCHITECT

DATE	

PHASE 1 PART B FOR:
TWIN FALLS COUNTY - WRIGHT AVE JAIL
2515 Wright Ave, Twin Falls, ID 83301
IRRIGATION DETAILS

Laughlin Ricks Architecture
architecture/planning
134 3RD Ave East, * Twin Falls, Idaho 83301
(208) 736-8050

DATE: 2/18/2025
CI Drawn | JB Checked
#23029-1B PROJECT #

SL2.5

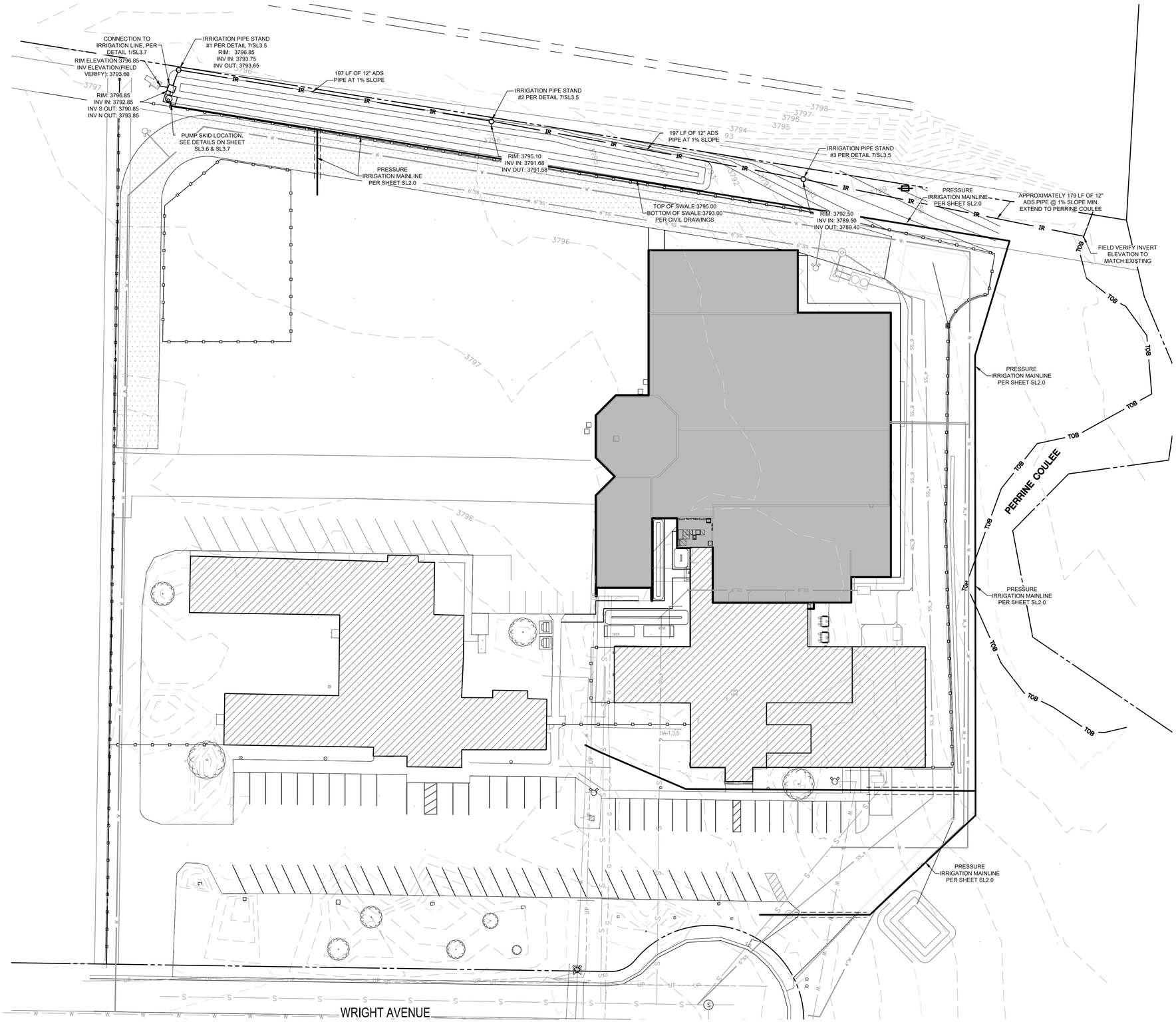

GRAVITY IRRIGATION PLAN

30 0 30 60 90

SCALE: 1"= 30'-0"

IRRIGATION LEGEND

- PROPERTY LINE
- IR — 12" ADS PIPE
- PRESSURIZED IRRIGATION MAINLINE- 3" CLASS 200

Know what's below. Call before you dig.

CALL 2 BUSINESS DAYS IN ADVANCE BEFORE YOU DIG, GRADE, OR EXCAVATE FOR THE MARKING OF UNDERGROUND MEMBER UTILITIES

BRECKON landdesign
• Civil Engineering
• Landscape Architecture
• Erosion & Sediment Control
• Graphic Communication
• Irrigation Design
• Land Planning
www.breckonlanddesign.com
Fax: (208) 376-8539
Phone: 208-376-5153
6661 North Glenwood Street
Garden City, Idaho 83714

STATE OF IDAHO
JOHN FRITZ BRECKON
LA-16536
2/18/2025
LANDSCAPE ARCHITECTURE

DATE

PHASE 1 PART B FOR:
TWIN FALLS COUNTY - WRIGHT AVE JAIL
2515 Wright Ave, Twin Falls, ID 83301
GRAVITY IRRIGATION PLAN

Laughlin Ricks Architecture
architecture/planning
134 3RD Ave East, * Twin Falls, Idaho 83301
(208) 736-8050

DATE: 2/18/2025
CI — Drawn
JB — Checked
#23029-1B — PROJECT #

SL3.0

S:_projects\2024\24051 tf county jail imp\CAD\sheets\24051 gravity irrigation.dwg plotted by: civerson on Mon, March 3 2025 at 11:29 AM

Know what's below. Call before you dig.
CALL 2 BUSINESS DAYS IN ADVANCE BEFORE YOU DIG, GRADE, OR EXCAVATE FOR THE MARKING OF UNDERGROUND MEMBER UTILITIES

BRECKON landdesign
• Civil Engineering
• Landscape Architecture
• Erosion & Sediment Control
• Graphic Communication
• Irrigation Design
• Land Planning
www.breckonlanddesign.com
Fax: (208) 376-8539
Phone: 208-376-5153
6661 North Glenwood Street
Garden City, Idaho 83714

STATE OF IDAHO
JON FRITZ BRECKON
Jon Breckon
LA-16536
2/18/2025
LANDSCAPE ARCHITECT

DATE

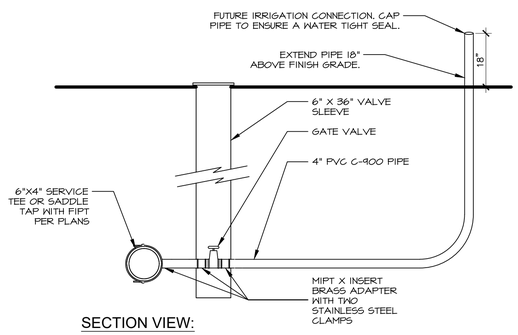

SECTION VIEW:

1 SERVICE LINE RISER

Scale: NTS

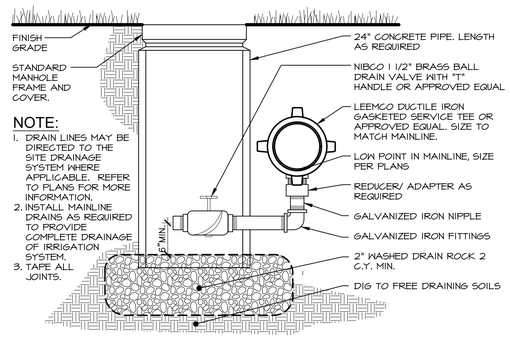

NOTE:
1. DRAIN LINES MAY BE DIRECTED TO THE SITE DRAINAGE SYSTEM WHERE APPLICABLE. REFER TO PLANS FOR MORE INFORMATION.
2. INSTALL MAINLINE DRAINS AS REQUIRED TO PROVIDE COMPLETE DRAINAGE OF IRRIGATION SYSTEM.
3. TAPE ALL JOINTS.

4 PRESSURE IRRIGATION MANUAL DRAIN VALVE

NOT TO SCALE

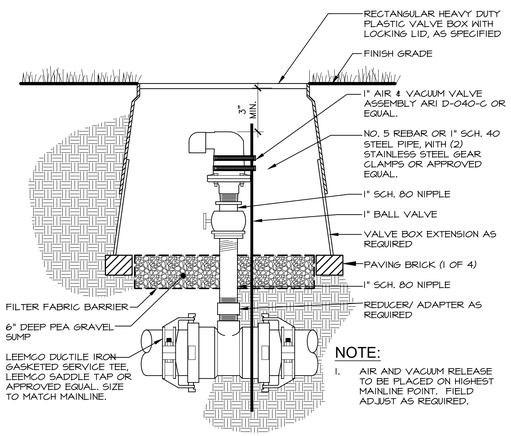

NOTE:
1. AIR AND VACUUM RELEASE TO BE PLACED ON HIGHEST MAINLINE POINT. FIELD ADJUST AS REQUIRED.

2 AIR RELIEF VALVE

NOT TO SCALE

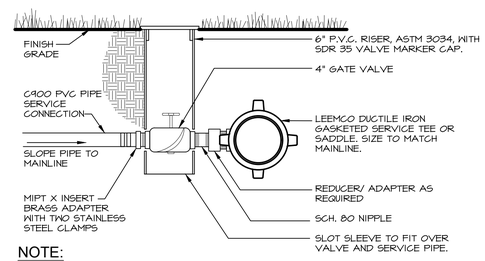

NOTE:
1. REFER TO "PRESSURE IRRIGATION SERVICE LINE CONNECTION AND LAYOUT" DETAIL FOR ADDITIONAL INFORMATION.

5 SERVICE CONNECTION

NOT TO SCALE

DISTANCE CHART

REFER TO THE FOLLOWING TABLE THAT LISTS THE LENGTH (IN FEET) FOR EACH SIZE/TYPE FITTING WITHIN WHICH ALL JOINTS JUST BE RESTRAINED. ALL FITTINGS AND JOINT RESTRAINTS SHALL BE INSTALLED PER MANUFACTURERS RECOMMENDATIONS & SPECIFICATIONS.

AS AN EXAMPLE, IF YOU ARE INSTALLING A 3" MAINLINE WITH A DIRECTIONAL CHANGE OF 90°, REFER TO CHART UNDER PIPE SIZE TO 3" AND UNDER BENDS 90 YOU WILL SEE THE DISTANCE OF 11', IF THERE IS ANY JOINT (VALVE, BELL, ETC.) YOU MUST INSTALL A JOINT RESTRAINT WITHIN 11' OF THE 90° MAINLINE DIRECTIONAL CHANGE.

PIPE SIZE	BENDS				REDUCERS			DEAD END	
	11°	22°	45°	90°	1 STEP	2 STEP	3 STEP	BLIND	SERV. B.
2"	1'	1'	2'	6'	-	-	-	19'	6'
2.5"	1'	2'	4'	9'	4'	-	-	23'	10'
3"	2'	3'	6'	11'	8'	10'	-	30'	15'
4"	2'	4'	9'	20'	14'	20'	31'	45'	25'
6"	3'	6'	13'	29'	30'	40'	53'	63'	40'
8"	4'	8'	15	38'	33'	55'	63'	75'	70'
10"	5'	9'	19'	45'	36'	56'	75'	96'	90'
12"	5'	10'	21'	53'	38'	60'	83'	112'	110'

INSTALLATION CHART

REFER TO THE FOLLOWING TABLE WHICH LISTS THE NUMBER OF BOLTS, SIZE, AND TORQUE FOR EACH BOLT IN REFERENCE TO THE SIZE OF PIPE WHICH IS BEING RESTRAINED.

AS AN EXAMPLE, IF YOU HAVE A 3" PIPE, YOU WILL NEED 2 BOLTS THAT ARE 3/8 X 2.5" AND TIGHTEN THEM WITH A TORQUE WRENCH TO 20 FT-LBS.

PIPE SIZE	NO. BOLTS	BOLT SIZE	TORQUE FT-LBS.
2"	2	3/8" x 2.5"	20
2.5"	2	3/8" x 2.5"	20
3"	2	3/8" x 2.5"	20
4"	2	1/2" x 3"	50
6"	2	1/2" x 3.5"	50
8"	4	1/2" x 4"	50
10"	4	5/8" x 5.5"	100
12"	4	5/8" x 5.5"	100

CONTACT TONY GARNER @ (208) 631-7787, THE LEEMCO REPRESENTATIVE, FOR ALL QUESTIONS CONCERNING LEEMCO PRODUCTS. COORDINATE AN INSTALLATION CLINIC WITH TONY GARNER PRIOR TO INSTALLING THE MAINLINE.

6 JOINT RESTRAINT NOTES

NOT TO SCALE

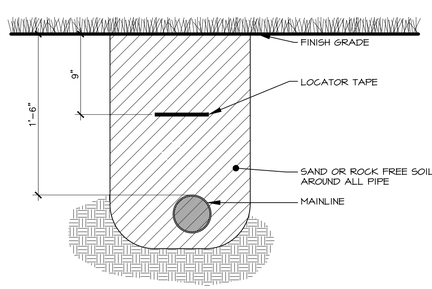

3 TRENCH SECTION

Scale: 1-1/2" = 1'-0"

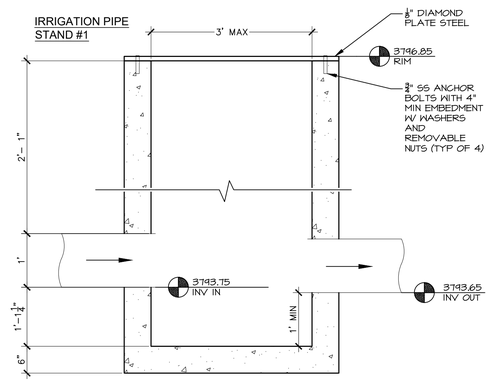

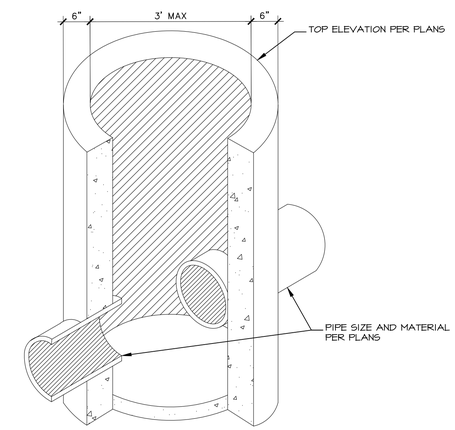

ISOMETRIC VIEW
NOT TO SCALE

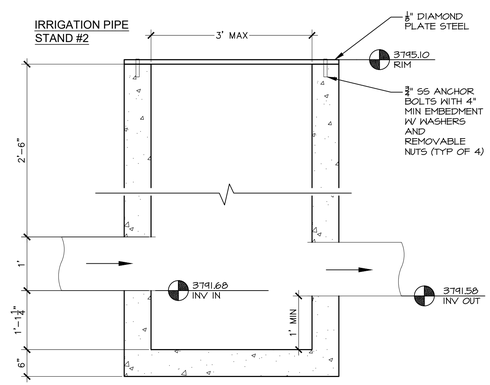

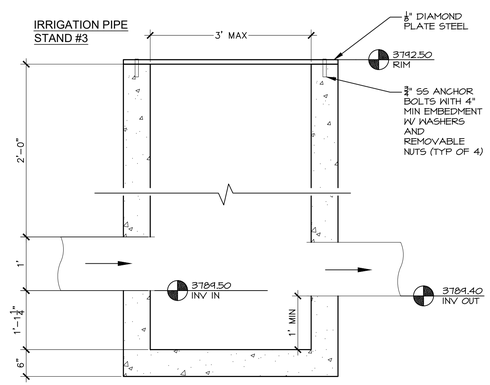

NOTE:
1. PLACE SUFFICIENT REINFORCING STEEL TO ALLOW FOR SITE SPECIFIC LOADING CONDITIONS AND PER ASTM C-478
2. DIAMETER OF STAND PIPE TO BE REQUIRED TO ALLOW FOR SLIDE GATE AND PIPE CLEARANCE 30" MIN
3. MAX 18" DIAMETER INLET-OUTLET PIPE
4. MIN 6" GATE CLEARANCE
5. TYPICAL MANUFACTURER'S SIZING REFERS TO STRUCTURE INTERIOR DIMENSIONS
6. SEE ISPWC SD-620 FOR MORE INFORMATION

7 IRRIGATION PIPE STANDS

Scale: 3/4" = 1'-0"

PHASE 1 PART B FOR:
TWIN FALLS COUNTY - WRIGHT AVE JAIL
2515 Wright Ave, Twin Falls, ID 83301
GRAVITY IRRIGATION DETAILS

Laughlin Ricks Architecture
architecture/planning
134 3RD Ave East, * Twin Falls, Idaho 83301
(208) 736-8050

DATE: 2/18/2025
CI Drawn — JB Checked
#23029-1B PROJECT #

SL3.5

S:_projects\2024\24051 tf county jail imp\CAD\sheets\24051 gravity irrigation.dwg plotted by: civerson on Mon, March 3 2025 at 11:29 AM

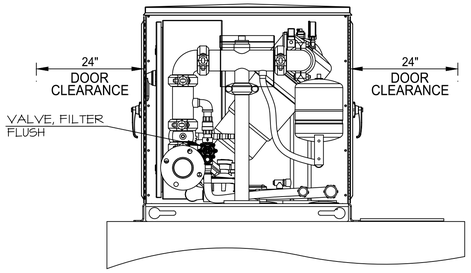

1 SIDE VIEW

Scale: NTS

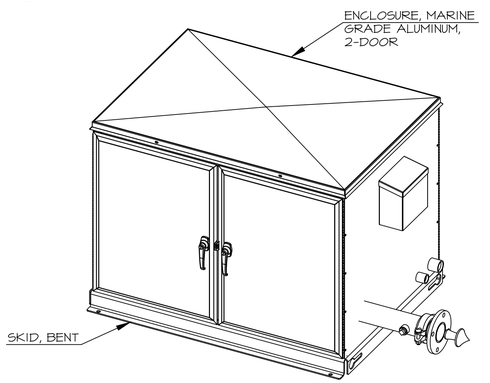

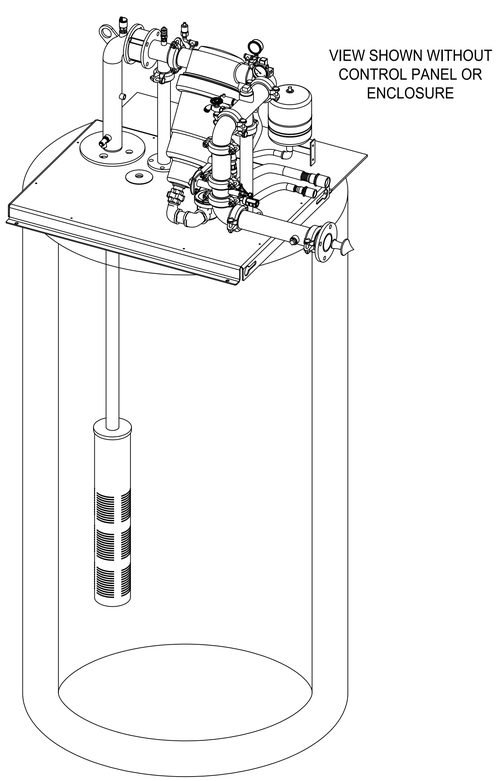

2 OVERALL PUMP LAYOUT

Scale: NTS

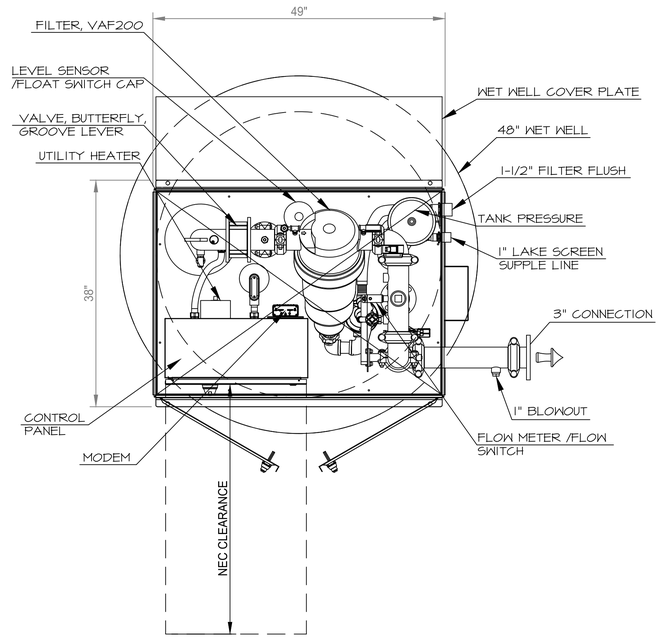

3 PLAN VIEW

Scale: NTS

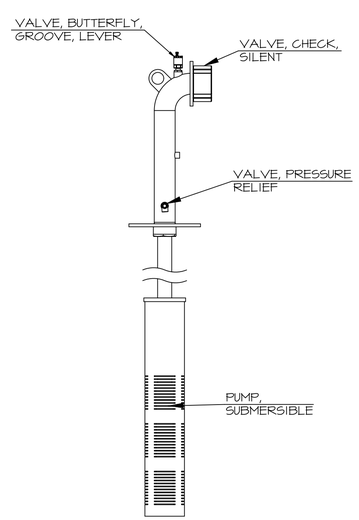

4 DUTY PUMP

Scale: NTS

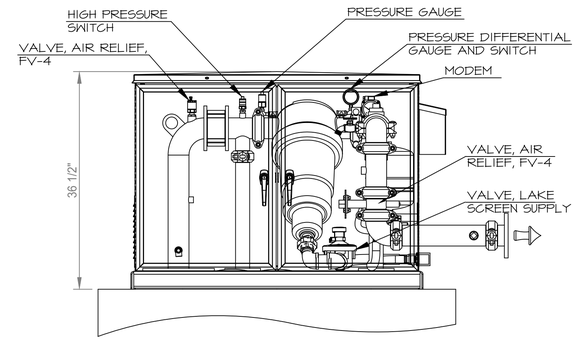

5 FRONT VIEW

Scale: NTS

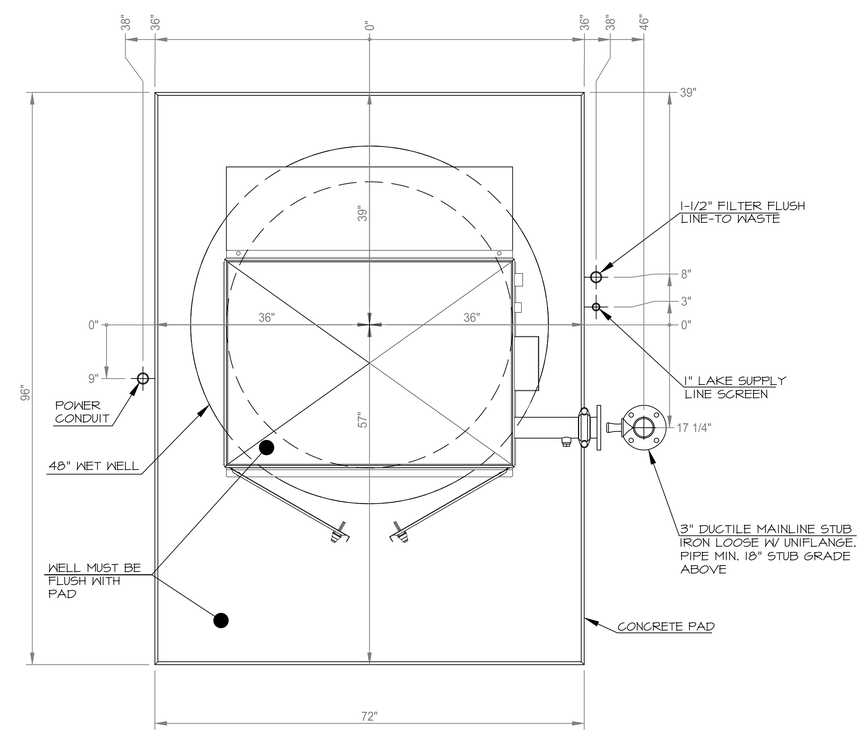

6 CONCRETE PAD LAYOUT 48" WELL

Scale: NTS

DESIGN SPECIFICATIONS					
DESIGN FLOW RATE:	55	GPM	@	85	PSI
POWER:	480	VOLT	/ 3 PHASE		
MODEL #:	S##V1S007X00055-085V32B483DNS-3				

MATERIAL
PIPING:
SKID:

UNLESS OTHERWISE SPECIFIED:
DIMENSIONS ARE IN INCHES
TOLERANCES:
FRACTIONAL: ± 1/8"
ONE PLACE DECIMAL: ± .10
TWO PLACE DECIMAL: ± .05
DO NOT SCALE DRAWING

TITLE: PI SERIES: ATLAS-SERIES SUBMERSIBLE TURBINE PUMP STATION W/FILTER, RIGHT DISCHARGE, 10-200 GPM

PROJECT: TWIN FALLS JAIL

DRAWN: JWR | DATE: 2/13/2025

PART NO: PRECISION PUMPING SYSTEMS (208) 323-5300

811 Know what's below. Call before you dig.
CALL 2 BUSINESS DAYS IN ADVANCE BEFORE YOU DIG, GRADE, OR EXCAVATE FOR THE MARKING OF UNDERGROUND MEMBER UTILITIES

BRECKON landdesign
• Civil Engineering
• Landscape Architecture
• Erosion & Sediment Control
• Graphic Communication
• Irrigation Design
• Land Planning
www.breckonlanddesign.com
Fax: (208) 376-8539
Phone: 208-376-5153
6661 North Glenwood Street
Garden City, Idaho 83714

STATE OF IDAHO
JON FRITZ BRECKON
Jon Breckon
LA-16536
2/18/2025
LANDSCAPE ARCHITECT

Laughlin Ricks Architecture
architecture/planning
134 3RD Ave East, * Twin Falls, Idaho 83301
(208) 736-8050

DATE

PHASE 1 PART B FOR:
TWIN FALLS COUNTY - WRIGHT AVE JAIL
2515 Wright Ave, Twin Falls, ID 83301
GRAVITY IRRIGATION DETAILS

DATE: 2/18/2025
CI Drawn | JB Checked
#23029-1B PROJECT #

SL3.6

S:_projects\2024\24051 tf county jail imp\CAD\sheets\24051 gravity irrigation.dwg plotted by: civerson on Mon, March 3 2025 at 11:29 AM

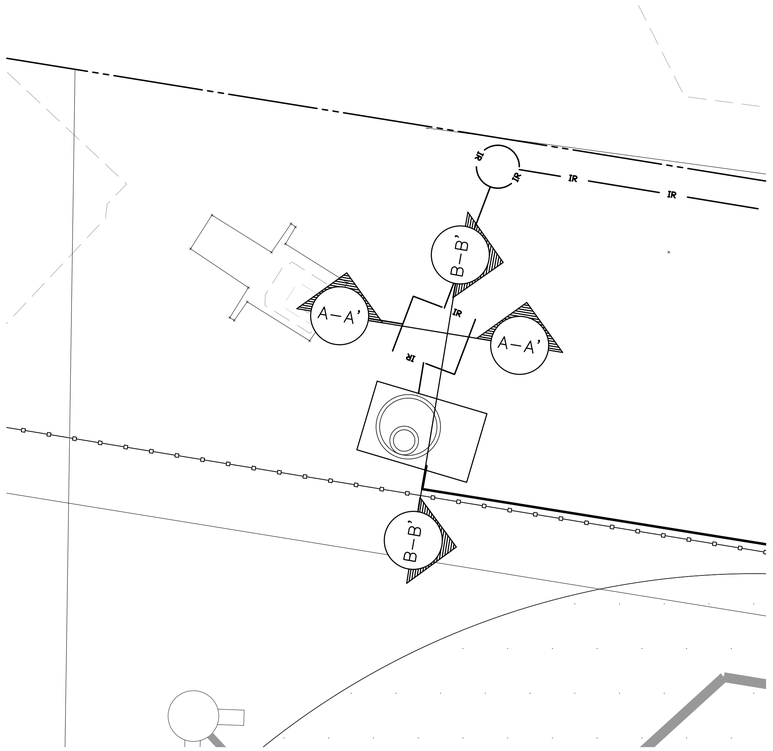

PUMP STATION LOCATION ENLARGEMENT

SCALE: 1"= 5'-0"

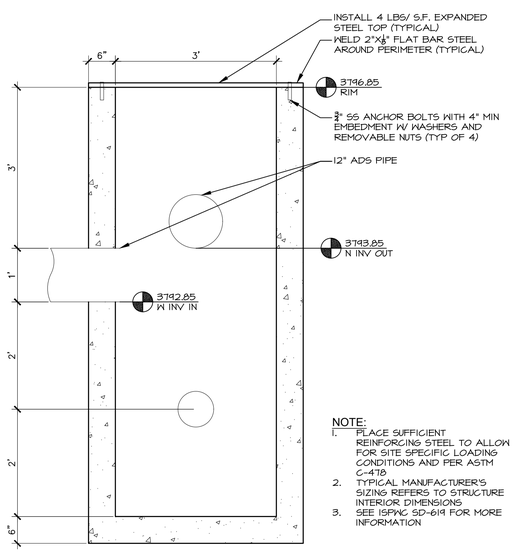

NOTE:
1. PLACE SUFFICIENT REINFORCING STEEL TO ALLOW FOR SITE SPECIFIC LOADING CONDITIONS AND PER ASTM C-478
2. TYPICAL MANUFACTURER'S SIZING REFERS TO STRUCTURE INTERIOR DIMENSIONS
3. SEE ISPWC SD-619 FOR MORE INFORMATION

1 IRRIGATION BOX- SECTION A-A'

Scale: 3/4"= 1'-0"

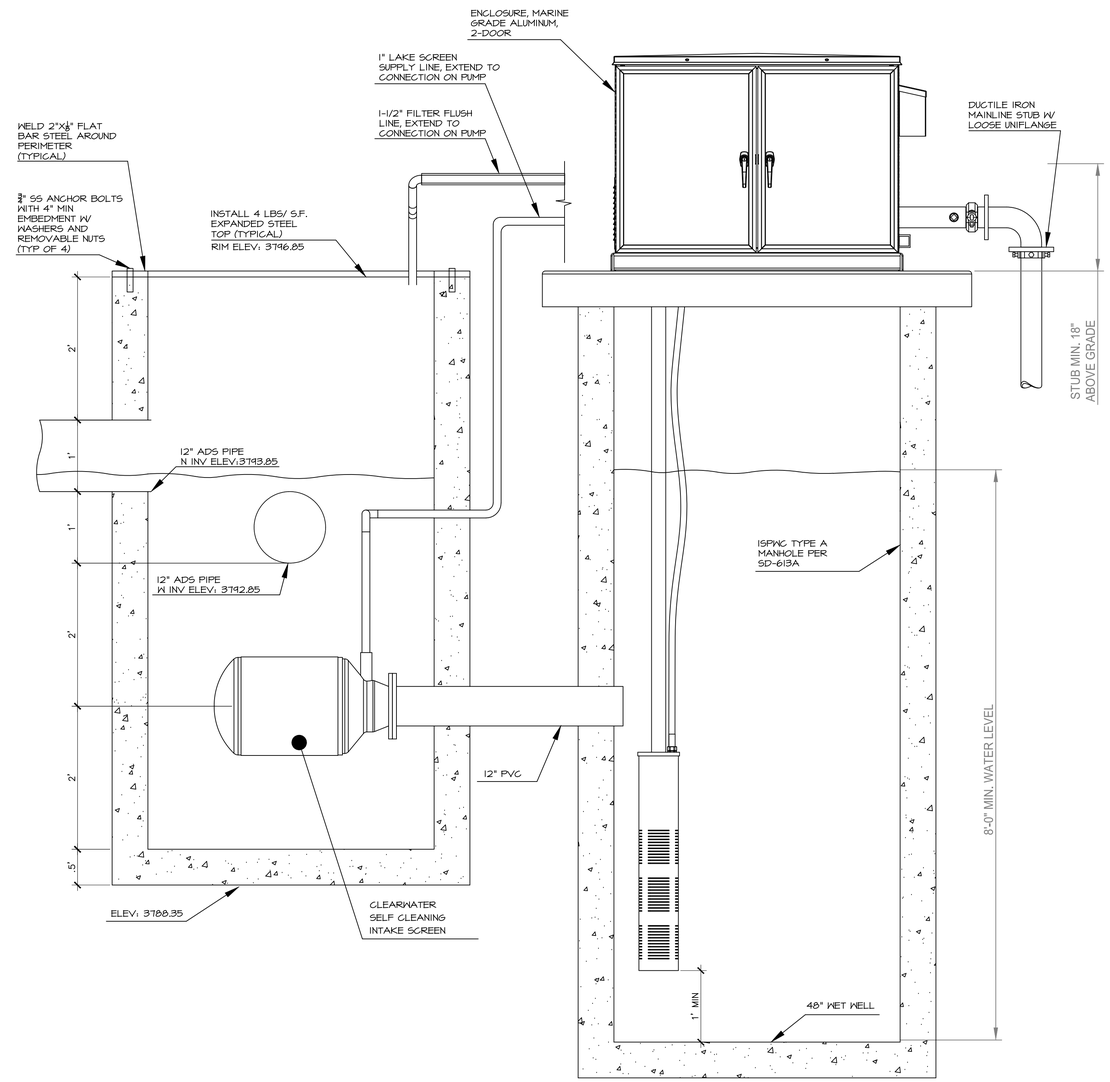

2 IRRIGATION PUMP STATION- SECTION B-B'

Scale: 1"=1'-0"

BRECKON landdesign
www.breckonlanddesign.com
Fax: (208) 376-8539
Phone: 208-376-5153
6661 North Glenwood Street
Garden City, Idaho 83714
• Civil Engineering
• Landscape Architecture
• Erosion & Sediment Control
• Graphic Communication
• Irrigation Design
• Land Planning

Know what's below. Call before you dig.
CALL 2 BUSINESS DAYS IN ADVANCE BEFORE YOU DIG, GRADE, OR EXCAVATE FOR THE MARKING OF UNDERGROUND MEMBER UTILITIES

STATE OF IDAHO
JON FRITZ BRECKON
LA-16536
2/18/2025
LANDSCAPE ARCHITECT

DATE

PHASE 1 PART B FOR:
TWIN FALLS COUNTY - WRIGHT AVE JAIL
2515 Wright Ave, Twin Falls, ID 83301
GRAVITY IRRIGATION DETAILS

Laughlin Ricks Architecture
architecture/planning
134 3RD Ave East, * Twin Falls, Idaho 83301
(208) 736-8050

DATE: 2/18/2025
CI — Drawn
JB — Checked
#23029-1B — PROJECT #

SL3.7

S:_projects\2024\24051 tf county jail impl\CAD\sheets\24051 gravity irrigation.dwg plotted by: civerson on Mon, March 3 2025 at 11:29 AM

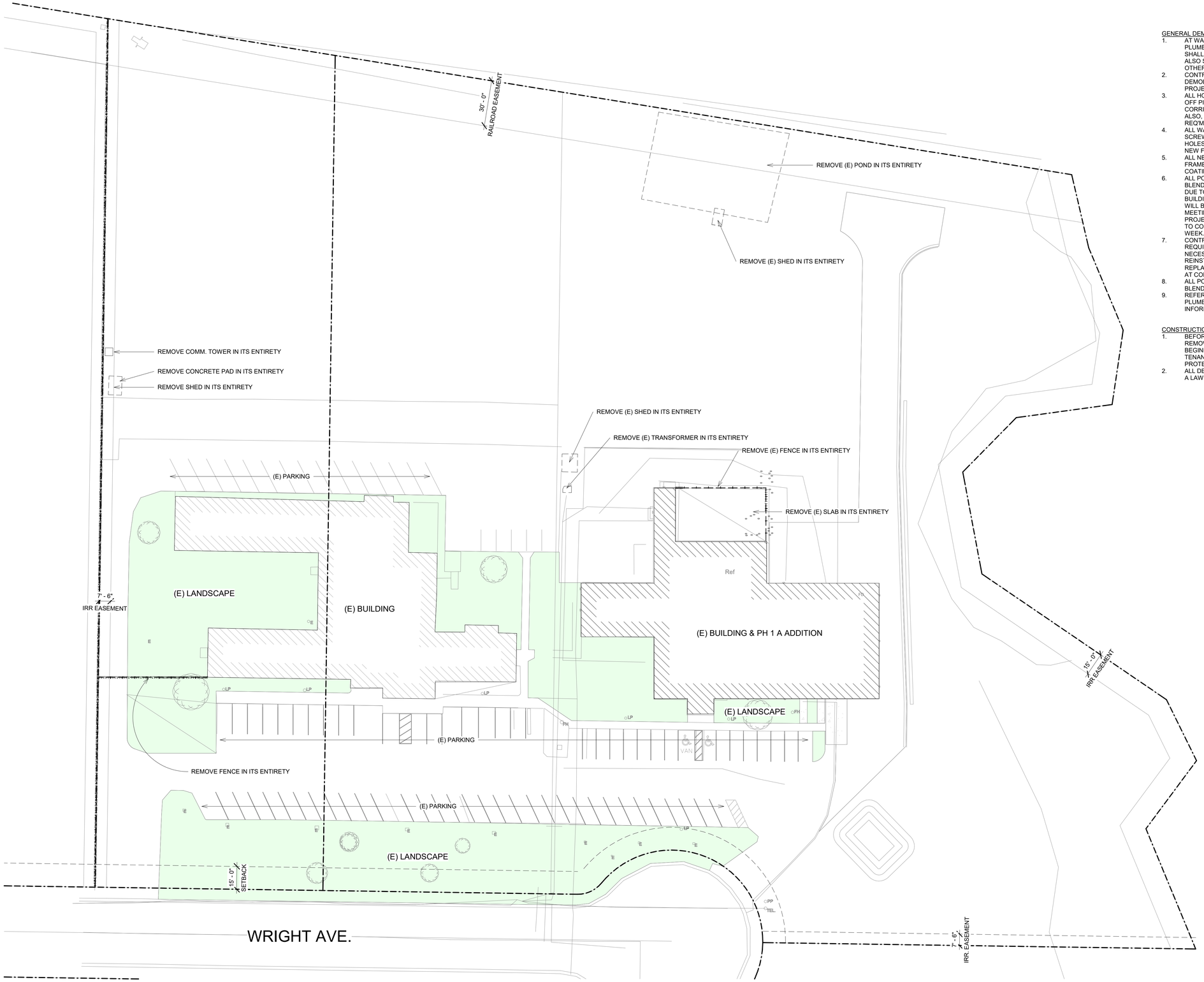

1 PHASE 1 PART B SITE PLAN DEMO
1" = 30'-0"

GENERAL DEMOLITION NOTES:

1. AT WALL REMOVAL, ALL ELECTRICAL MECH & PLUMBING SHALL BE CONSIDERED INCIDENTAL & SHALL BE REMOVED AS PART OF DEMOLITION. ALSO SEE ELEC., MECH., &PLUMBING PLANS FOR OTHER NOTES OR REQUIREMENTS.
2. CONTRACTOR SHALL NOTIFY THE COUNTY OF DEMOLITION WORK BEFORE PROCEEDING W/ PROJECT DEMOLITION.
3. ALL HOLES, EMPTY ELECTRICAL BOXES, & CUT OFF PIPING THROUGH EXISTING FIRE WALLS & CORRIDOR SHALL BE FILLED & FIRE SEALED. ALSO, SEE MECH. DRAWINGS FOR ADDITIONAL REQ'MTS.
4. ALL WALLS OF PROJECT SHALL HAVE ALL SCREWS, FASTENERS, & MISC. REMOVED AND HOLES PATCHED & REPAIRED AS REQUIRED FOR NEW FINISHES.
5. ALL NEW & EXIST'G METAL DOORS & WINDOW FRAMES SHALL BE PAINTED. SEE PAINT & COATING SPECIFICATIONS.
6. ALL POINTS OF WORK OF REMODEL SHALL BE BLENDED TO MATCH EXIST'G SURFACES & FINISH. DUE TO DEMOLITION WORK AFFECTING NEARBY BUILDING TENANTS SPACES, THE CONTRACTOR WILL BE RESPONSIBLE TO SCHEDULE WEEKLY MEETINGS WITH HIS SUBCONTRACTORS & PROJECT COORDINATOR BOB BEER T.F. COUNTY TO COORDINATE WORK TO BE SCHEDULE THAT WEEK.
7. CONTRACTOR WILL BE RESPONSIBLE FOR ANY REQUIRED REMOVAL OF CEILING, GRID, ETC. NECESSARY TO ACCESS WORK AREAS AND REINSTALL SUCH REMOVAL. CONTRACTOR SHALL REPLACE ANY DAMAMGED OR SOILED MATERIALS AT CONTRACTORS OWN EXPENSE.
8. ALL POINTS OF WORK OF REMODEL SHALL BE BLENDED TO MATCH EXIST'G SURFACES & FINISH.
9. REFER TO ELECTRICAL, MECHANICAL, AND PLUMBING DRAWINGS FOR ADDITIONAL DEMO INFORMATION

CONSTRUCTION WASTE:

1. BEFORE ANY CONSTRUCTION WASTE IS REMOVED FROM THE PROJECT ALL ROUTES BEGINNING FROM THE STAGING AREA TO THE TENANT IMPROVEMENT AREA SHALL BE PROTECTED IN PLACE.
2. ALL DEBRIS MATERIAL SHALL BE DISPOSED OF IN A LAWFUL MANNER.

LICENSED
ARCHITECT
AR-986981
KYNDELL M. MADSEN
STATE OF IDAHO
2/24/25

DATE

PHASE 1 PART B FOR:
TWIN FALLS COUNTY - WRIGHT AVE JAIL
2515 Wright Ave, Twin Falls, ID 83301
PH 1 PART B - DEMO SITE PLAN

Laughlin Ricks Architecture
architecture/planning
134 3RD Ave East * Twin Falls, Idaho 83301
(208) 736-8050

DATE: 2/24/25
KM Drawn
RCR Checked
#23029 PROJECT #

A1B-1.0

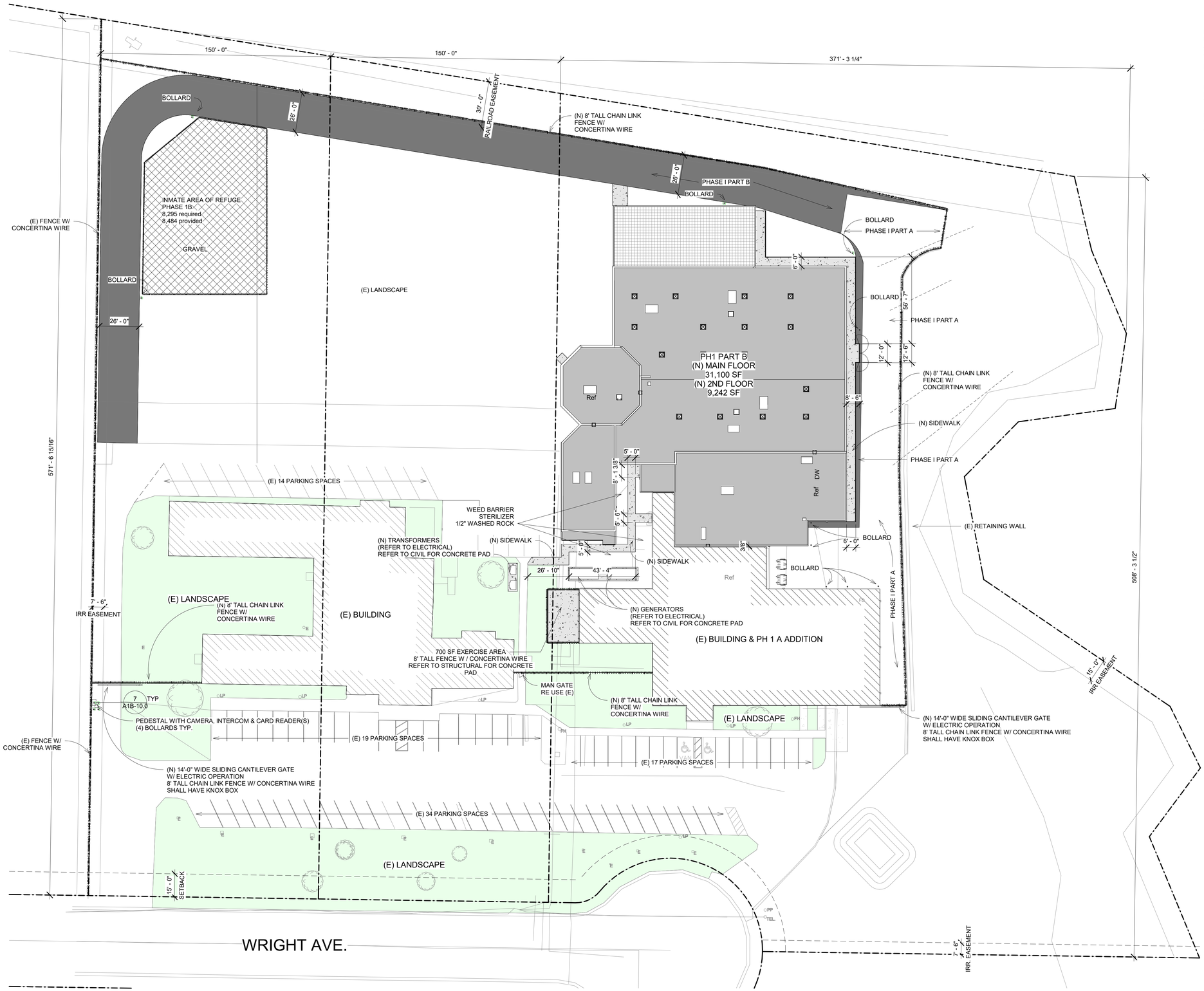

1 PHASE 1 PART B SITE PLAN
1" = 30'-0"

PARCEL ID: RPT54650010050
PARCEL SF SIZE: 180,643.11
ADDRESS: 2515 WRIGHT AVE. TWIN FALLS, ID 83301
ZONING DISTRICT: M-2

PHASE 1 PART A & B
15 EMPLOYEES PER SHIFT
15 + 15 AT SHIFT CHANGE = 30
PLUS 7 ATTORNEY ROOMS
PLUS 2 VISITATION MONITORS
TOTAL REQ'D = 39

LANDSCAPING:
2 SF PER LINERAR FOOT OF FRONTAGE
447 X 2 = 894 SF
15,874 SF PROVIDED

PROPERTY SET BACKS:
15' ON OTHER STREETS FROM PROPERTY LINE

NOTE: WEED BARRIER, STERILIZER, & 1/2" WASHED ROCK TO BE INSTALLED IN ANY DISTURBED AREAS

LICENSED ARCHITECT
AR-986981
KYNDELL M. MADSEN
STATE OF IDAHO
2/24/25

DATE

PHASE 1 PART B FOR:
TWIN FALLS COUNTY - WRIGHT AVE JAIL
2515 Wright Ave, Twin Falls, ID 83301
PH 1 PART B - REMODEL SITE PLAN

Laughlin Ricks Architecture
architecture/planning
134 3RD Ave East * Twin Falls, Idaho 83301
(208) 736-8050

DATE: 2/24/25
KM Drawn
RCR Checked
#23029 PROJECT #

A1B-1.1

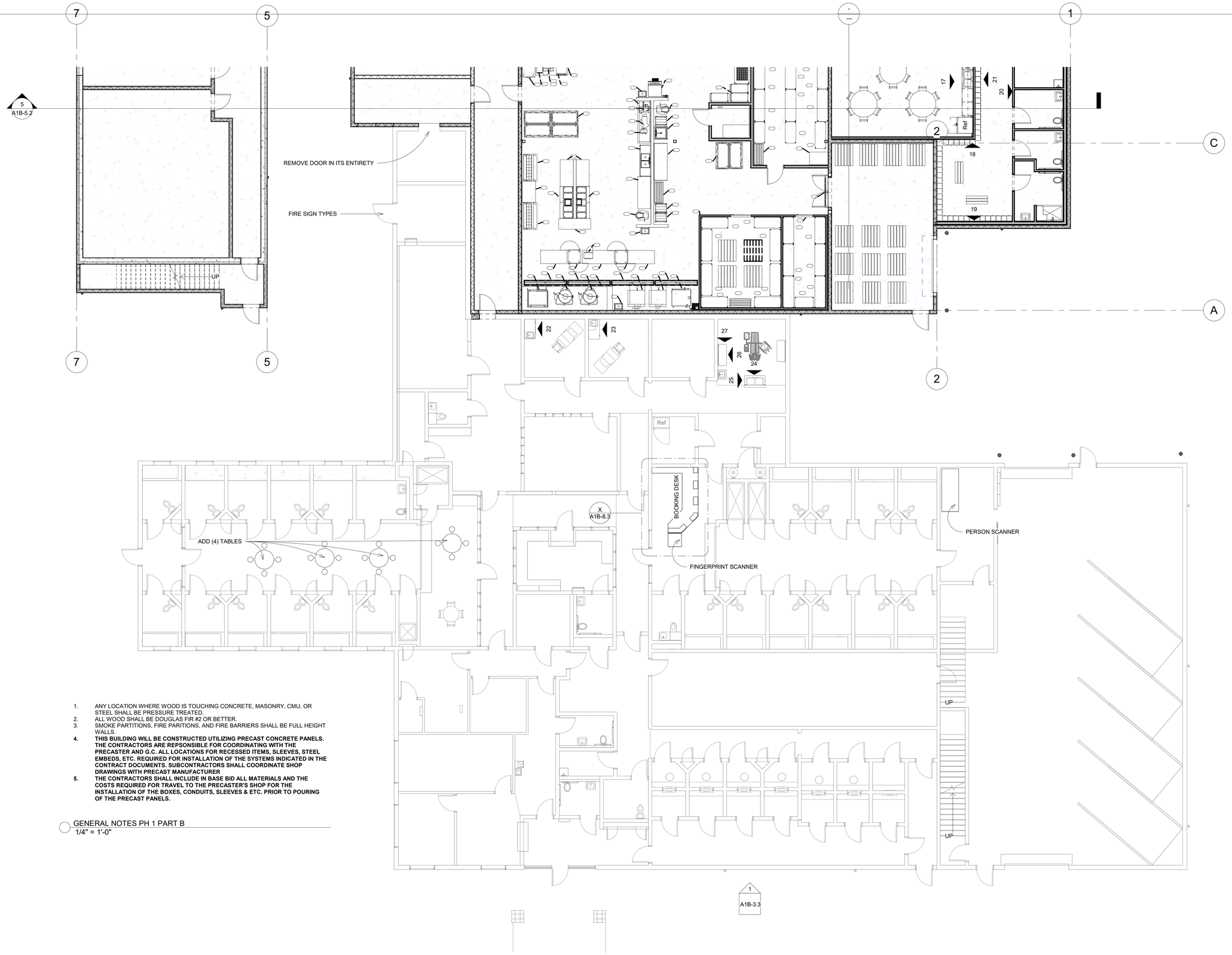

1. ANY LOCATION WHERE WOOD IS TOUCHING CONCRETE, MASONRY, CMU, OR STEEL SHALL BE PRESSURE TREATED.
2. ALL WOOD SHALL BE DOUGLAS FIR #2 OR BETTER.
3. SMOKE PARTITIONS, FIRE PARITIONS, AND FIRE BARRIERS SHALL BE FULL HEIGHT WALLS.
4. **THIS BUILDING WILL BE CONSTRUCTED UTILIZING PRECAST CONCRETE PANELS. THE CONTRACTORS ARE REPSONSIBLE FOR COORDINATING WITH THE PRECASTER AND G.C. ALL LOCATIONS FOR RECESSED ITEMS, SLEEVES, STEEL EMBEDS, ETC. REQUIRED FOR INSTALLATION OF THE SYSTEMS INDICATED IN THE CONTRACT DOCUMENTS. SUBCONTRACTORS SHALL COORDINATE SHOP DRAWINGS WITH PRECAST MANUFACTURER**
5. **THE CONTRACTORS SHALL INCLUDE IN BASE BID ALL MATERIALS AND THE COSTS REQUIRED FOR TRAVEL TO THE PRECASTER'S SHOP FOR THE INSTALLATION OF THE BOXES, CONDUITS, SLEEVES & ETC. PRIOR TO POURING OF THE PRECAST PANELS.**

GENERAL NOTES PH 1 PART B
1/4" = 1'-0"

1 PH 1 PART B MAIN FLOOR AREA E
1/8" = 1'-0"

LICENSED ARCHITECT AR-986981
KYNDELL M. MADSEN STATE OF IDAHO
2/24/25

DATE

PHASE 1 PART B FOR:
TWIN FALLS COUNTY - WRIGHT AVE JAIL
2515 Wright Ave, Twin Falls, ID 83301
PH 1 PART B - AREA E REMODEL FLOOR PLAN

Laughlin Ricks Architecture
architecture/planning
134 3RD Ave East * Twin Falls, Idaho 83301
(208) 736-8050

DATE: 2/24/25
KM Drawn
RCR Checked
#23029 PROJECT #

A1B-2.0

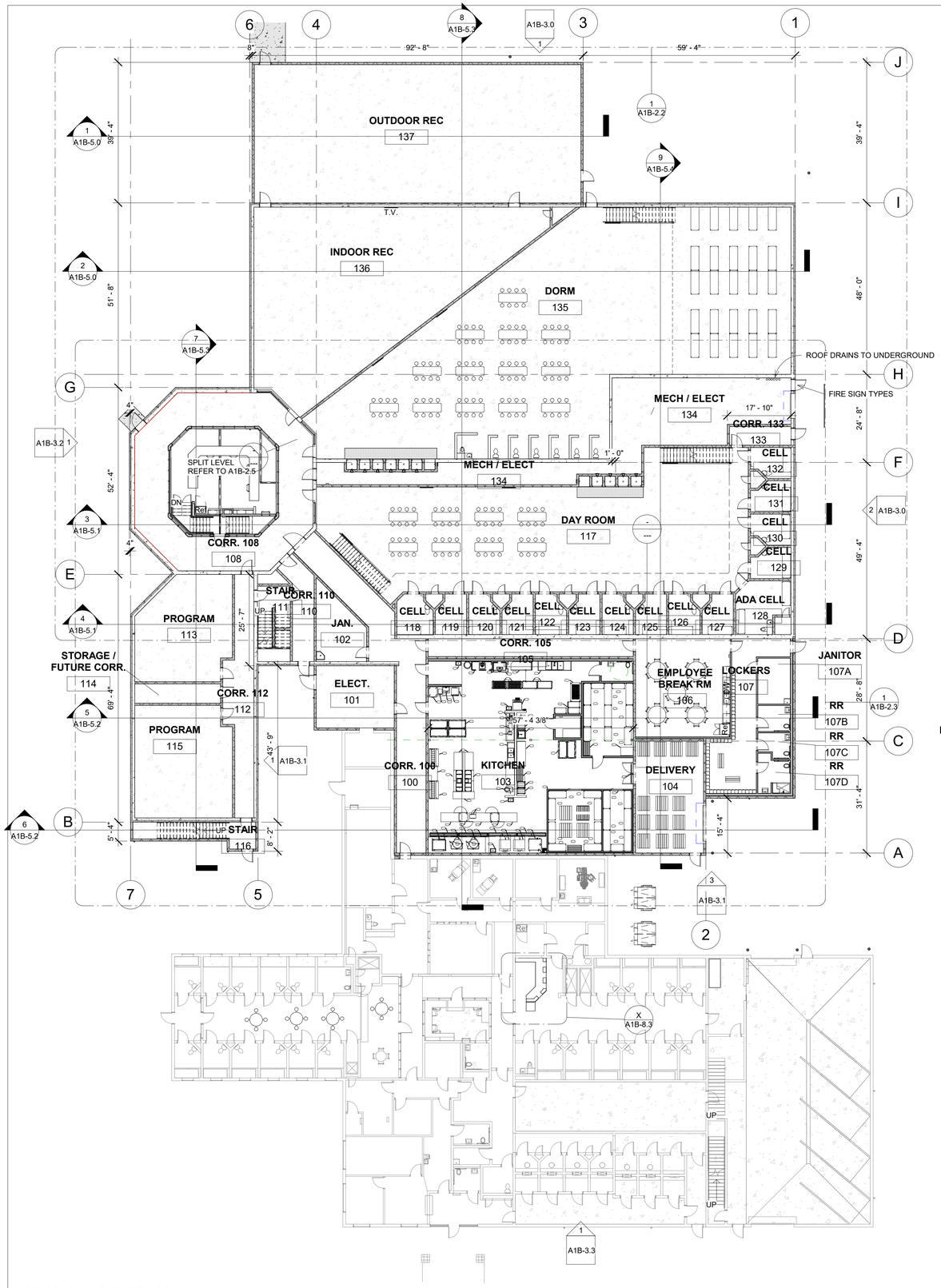

1 PHASE 1 PART B MAIN FLOOR
1/16" = 1'-0"

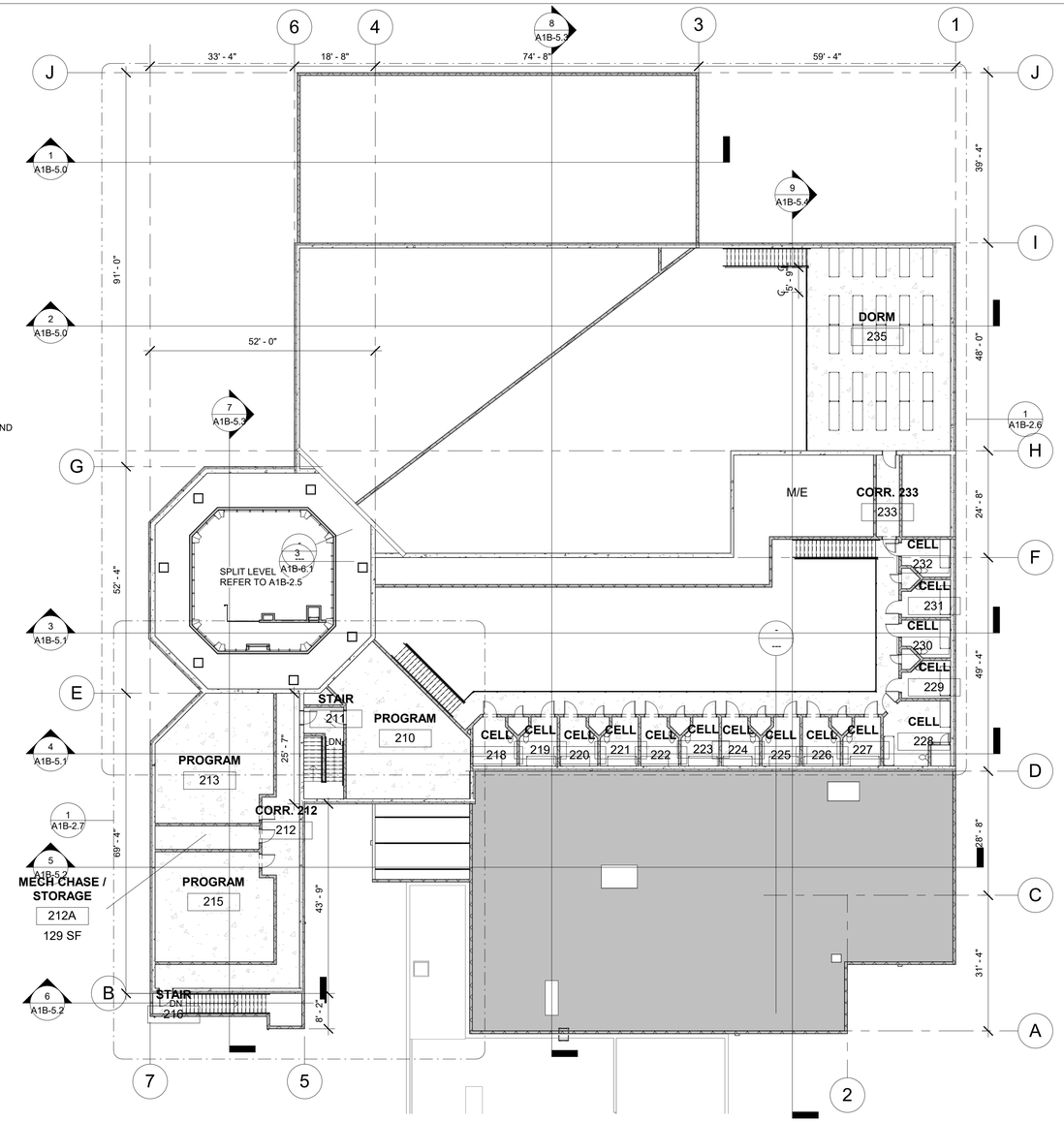

2 PHASE 1 PART B MEZZANINE
1/16" = 1'-0"

1. ANY LOCATION WHERE WOOD IS TOUCHING CONCRETE, MASONRY, CMU, OR STEEL SHALL BE PRESSURE TREATED.
2. ALL WOOD SHALL BE DOUGLAS FIR #2 OR BETTER.
3. SMOKE PARTITIONS, FIRE PARITIONS, AND FIRE BARRIERS SHALL BE FULL HEIGHT WALLS.
4. **THIS BUILDING WILL BE CONSTRUCTED UTILIZING PRECAST CONCRETE PANELS. THE CONTRACTORS ARE REPSONSIBLE FOR COORDINATING WITH THE PRECASTER AND G.C. ALL LOCATIONS FOR RECESSED ITEMS, SLEEVES, STEEL EMBEDS, ETC. REQUIRED FOR INSTALLATION OF THE SYSTEMS INDICATED IN THE CONTRACT DOCUMENTS. SUBCONTRACTORS SHALL COORDINATE SHOP DRAWINGS WITH PRECAST MANUFACTURER**
5. **THE CONTRACTORS SHALL INCLUDE IN BASE BID ALL MATERIALS AND THE COSTS REQUIRED FOR TRAVEL TO THE PRECASTER'S SHOP FOR THE INSTALLATION OF THE BOXES, CONDUITS, SLEEVES & ETC. PRIOR TO POURING OF THE PRECAST PANELS.**

GENERAL NOTES PH 1 PART B
1/4" = 1'-0"

LICENSED ARCHITECT
AR-986981
KYNDELL M. MADSEN
STATE OF IDAHO
2/24/25

DATE

PHASE 1 PART B FOR:
TWIN FALLS COUNTY - WRIGHT AVE JAIL
2515 Wright Ave, Twin Falls, ID 83301
PH 1 PART B - FLOOR PLANS

Laughlin Ricks Architecture
architecture/planning
134 3RD Ave East, * Twin Falls, Idaho 83301
(208) 736-8050

DATE: 2/24/25
KM Drawn
RCR Checked
#23029 PROJECT #

A1B-2.1

1. ANY LOCATION WHERE WOOD IS TOUCHING CONCRETE, MASONRY, CMU, OR STEEL SHALL BE PRESSURE TREATED.
2. ALL WOOD SHALL BE DOUGLAS FIR #2 OR BETTER.
3. SMOKE PARTITIONS, FIRE PARITIONS, AND FIRE BARRIERS SHALL BE FULL HEIGHT WALLS.
4. **THIS BUILDING WILL BE CONSTRUCTED UTILIZING PRECAST CONCRETE PANELS. THE CONTRACTORS ARE REPSONSIBLE FOR COORDINATING WITH THE PRECASTER AND G.C. ALL LOCATIONS FOR RECESSED ITEMS, SLEEVES, STEEL EMBEDS, ETC. REQUIRED FOR INSTALLATION OF THE SYSTEMS INDICATED IN THE CONTRACT DOCUMENTS. SUBCONTRACTORS SHALL COORDINATE SHOP DRAWINGS WITH PRECAST MANUFACTURER**
5. **THE CONTRACTORS SHALL INCLUDE IN BASE BID ALL MATERIALS AND THE COSTS REQUIRED FOR TRAVEL TO THE PRECASTER'S SHOP FOR THE INSTALLATION OF THE BOXES, CONDUITS, SLEEVES & ETC. PRIOR TO POURING OF THE PRECAST PANELS.**

GENERAL NOTES PH 1 PART B
1/4" = 1'-0"

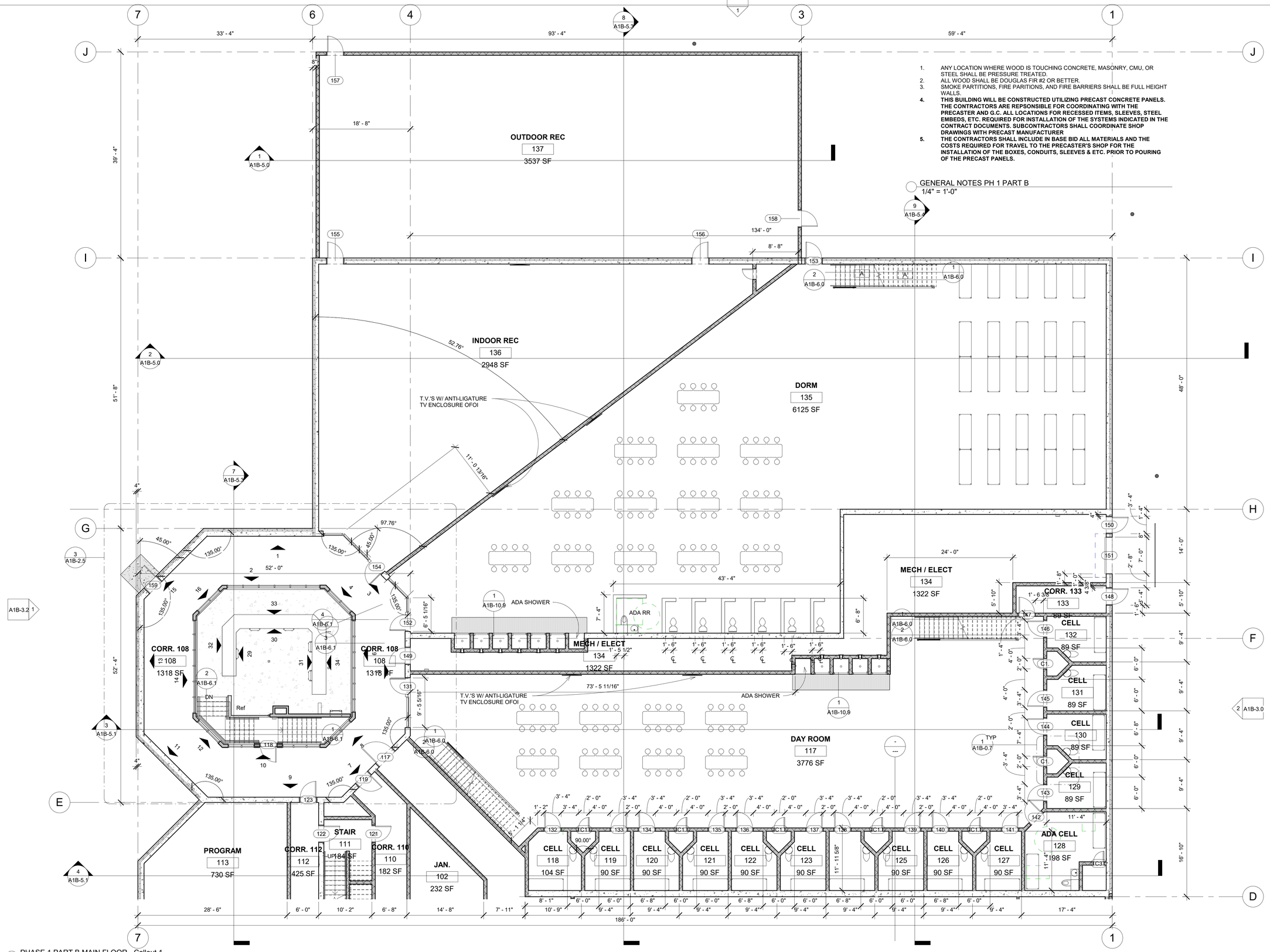

1 PHASE 1 PART B MAIN FLOOR - Callout 1
1/8" = 1'-0"

LICENSED ARCHITECT AR-986981
KYNDELL M. MADSEN
STATE OF IDAHO
2/24/25

DATE

PHASE 1 PART B FOR:
TWIN FALLS COUNTY - WRIGHT AVE JAIL
2515 Wright Ave, Twin Falls, ID 83301
PH 1 PART B - ENLARGED MAIN FLOOR
FLOOR PLAN

Laughlin Ricks Architecture
architecture/planning
134 3RD Ave East * Twin Falls, Idaho 83301
(208) 736-8050

DATE: 2/24/25
KM Drawn
RCR Checked
#23029 PROJECT #

A1B-2.2

1. ANY LOCATION WHERE WOOD IS TOUCHING CONCRETE, MASONRY, CMU, OR STEEL SHALL BE PRESSURE TREATED.
2. ALL WOOD SHALL BE DOUGLAS FIR #2 OR BETTER.
3. SMOKE PARTITIONS, FIRE PARITIONS, AND FIRE BARRIERS SHALL BE FULL HEIGHT WALLS.
4. **THIS BUILDING WILL BE CONSTRUCTED UTILIZING PRECAST CONCRETE PANELS. THE CONTRACTORS ARE REPSONSIBLE FOR COORDINATING WITH THE PRECASTER AND G.C. ALL LOCATIONS FOR RECESSED ITEMS, SLEEVES, STEEL EMBEDS, ETC. REQUIRED FOR INSTALLATION OF THE SYSTEMS INDICATED IN THE CONTRACT DOCUMENTS. SUBCONTRACTORS SHALL COORDINATE SHOP DRAWINGS WITH PRECAST MANUFACTURER**
5. **THE CONTRACTORS SHALL INCLUDE IN BASE BID ALL MATERIALS AND THE COSTS REQUIRED FOR TRAVEL TO THE PRECASTER'S SHOP FOR THE INSTALLATION OF THE BOXES, CONDUITS, SLEEVES & ETC. PRIOR TO POURING OF THE PRECAST PANELS.**

GENERAL NOTES PH 1 PART B
1/4" = 1'-0"

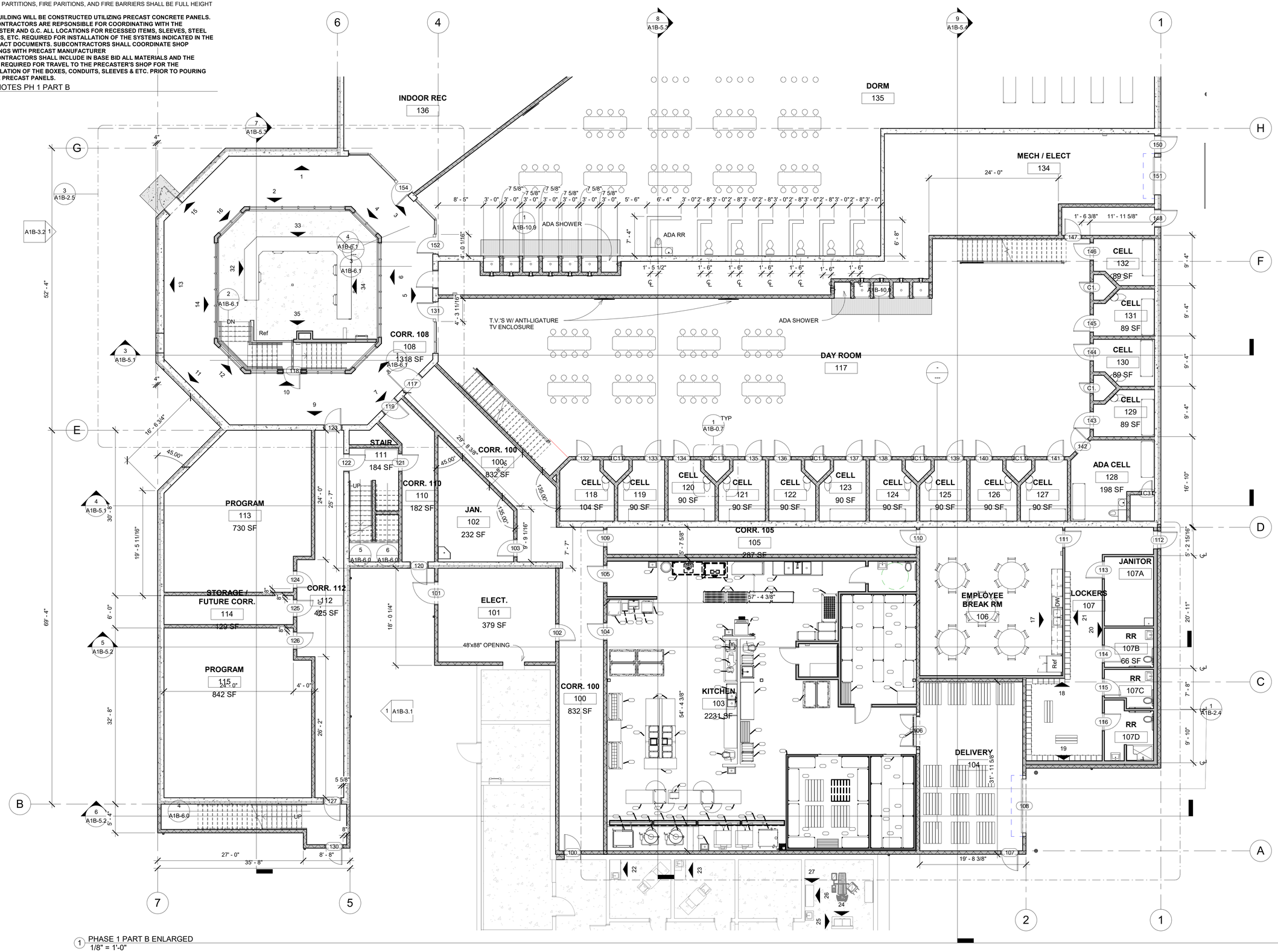

1 PHASE 1 PART B ENLARGED
1/8" = 1'-0"

LICENSED ARCHITECT AR-986981
KYNDELL M. MADSEN STATE OF IDAHO
2/24/25

DATE

PHASE 1 PART B FOR:
TWIN FALLS COUNTY - WRIGHT AVE JAIL
2515 Wright Ave, Twin Falls, ID 83301
PH 1 PART B - ENLARGED MAIN FLOOR PLAN

Laughlin Ricks Architecture
architecture/planning
134 3RD Ave East, * Twin Falls, Idaho 83301
(208) 736-8050

DATE: 2/24/25
KM Drawn
RCR Checked
#23029 PROJECT #

A1B-2.3

1. ANY LOCATION WHERE WOOD IS TOUCHING CONCRETE, MASONRY, CMU, OR STEEL SHALL BE PRESSURE TREATED.
2. ALL WOOD SHALL BE DOUGLAS FIR #2 OR BETTER.
3. SMOKE PARTITIONS, FIRE PARITIONS, AND FIRE BARRIERS SHALL BE FULL HEIGHT WALLS.
4. **THIS BUILDING WILL BE CONSTRUCTED UTILIZING PRECAST CONCRETE PANELS. THE CONTRACTORS ARE REPSONSIBLE FOR COORDINATING WITH THE PRECASTER AND G.C. ALL LOCATIONS FOR RECESSED ITEMS, SLEEVES, STEEL EMBEEDS, ETC. REQUIRED FOR INSTALLATION OF THE SYSTEMS INDICATED IN THE CONTRACT DOCUMENTS. SUBCONTRACTORS SHALL COORDINATE SHOP DRAWINGS WITH PRECAST MANUFACTURER**
5. **THE CONTRACTORS SHALL INCLUDE IN BASE BID ALL MATERIALS AND THE COSTS REQUIRED FOR TRAVEL TO THE PRECASTER'S SHOP FOR THE INSTALLATION OF THE BOXES, CONDUITS, SLEEVES & ETC. PRIOR TO POURING OF THE PRECAST PANELS.**

GENERAL NOTES PH 1 PART B
1/4" = 1'-0"

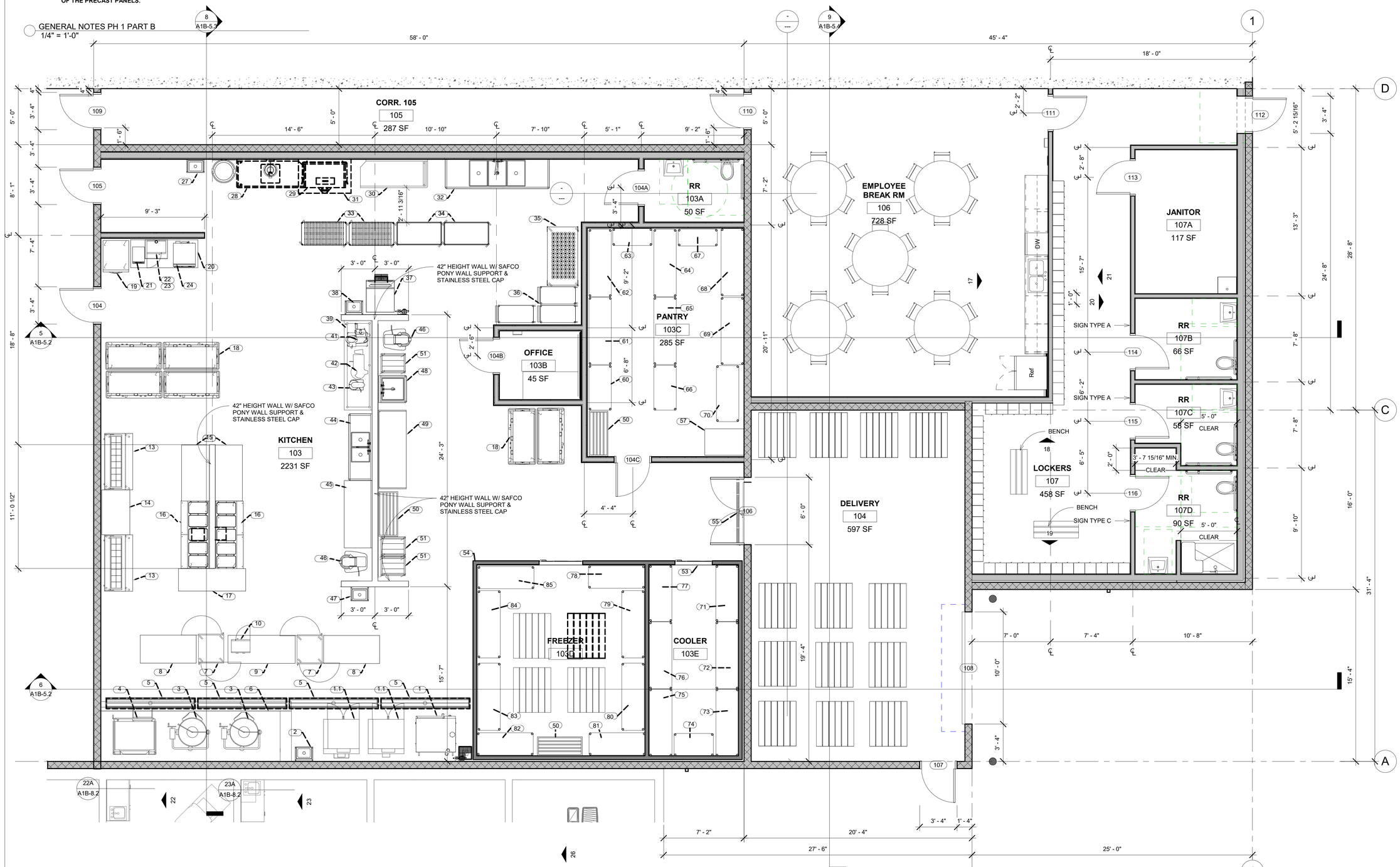

PHASE 1 PART B ENLARGED KITCHEN - Callout 1
1/4" = 1'-0"

LICENSED ARCHITECT AR-986981
KYNDELL M. MADSEN STATE OF IDAHO
2/24/25

DATE

PHASE 1 PART B FOR:
TWIN FALLS COUNTY - WRIGHT AVE JAIL
2515 Wright Ave, Twin Falls, ID 83301
PH 1 PART B - ENLARGED KITCHEN PLAN

Laughlin Ricks Architecture
architecture/planning
134 3RD Ave East * Twin Falls, Idaho 83301
(208) 736-8050

DATE: 2/24/25
KM Drawn
RCR Checked
#23029 PROJECT #

A1B-2.4

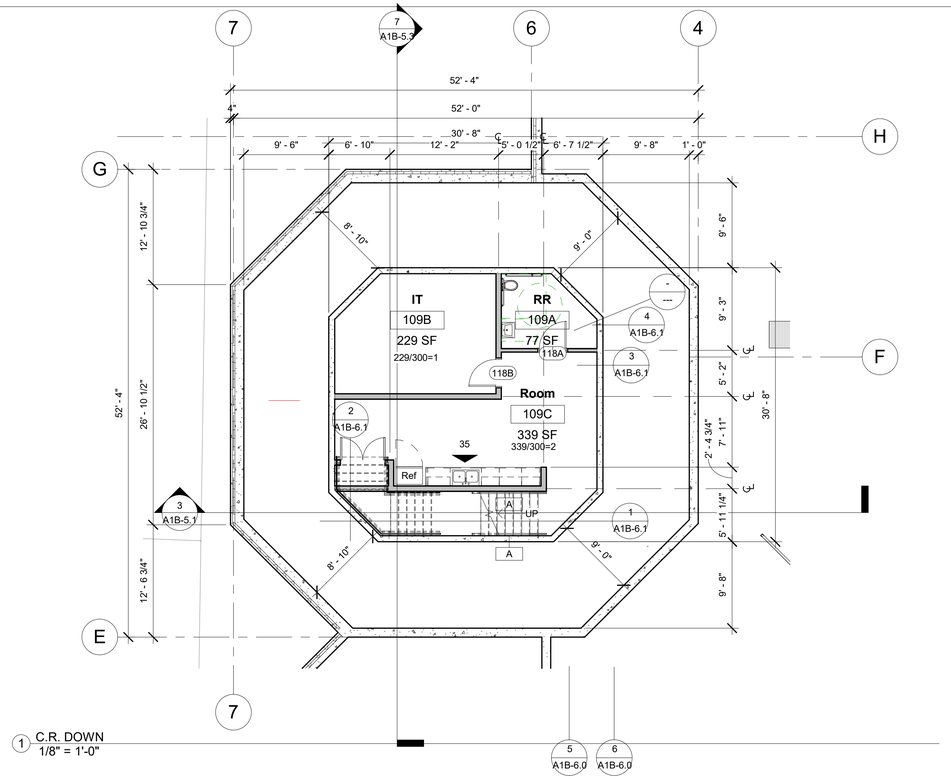

1 C.R. DOWN
1/8" = 1'-0"

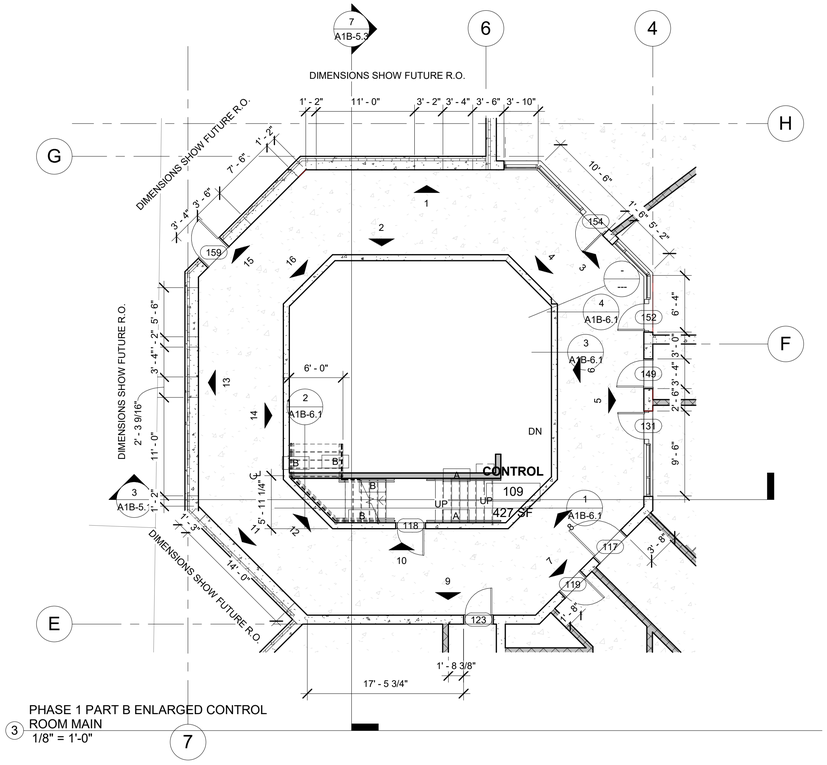

3 PHASE 1 PART B ENLARGED CONTROL ROOM MAIN
1/8" = 1'-0"

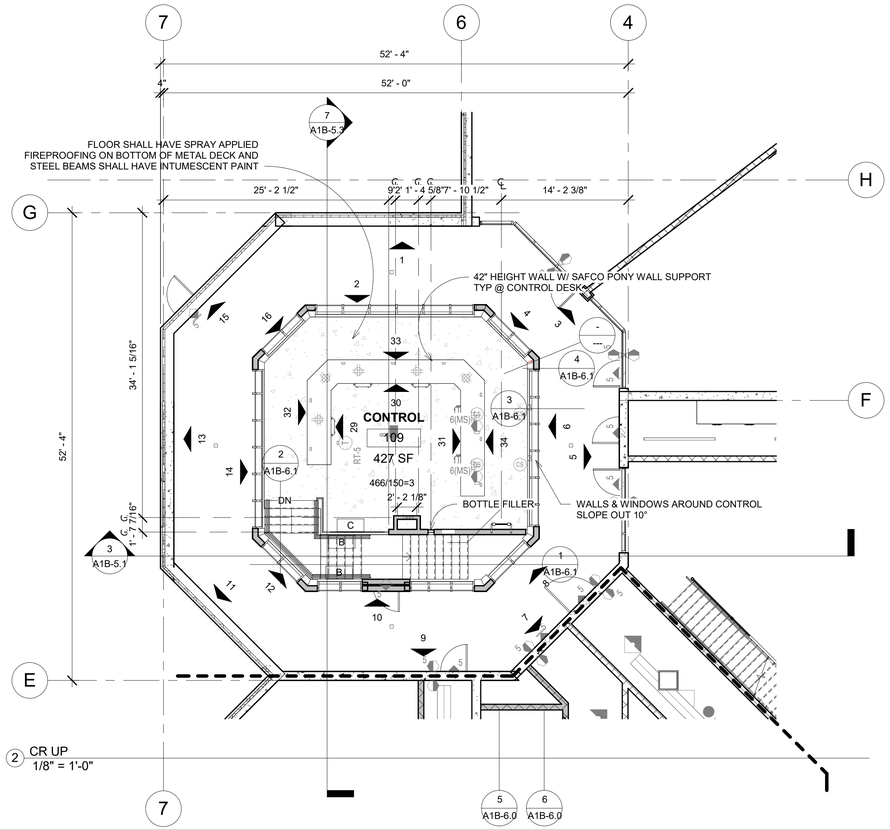

2 CR UP
1/8" = 1'-0"

1. ANY LOCATION WHERE WOOD IS TOUCHING CONCRETE, MASONRY, CMU, OR STEEL SHALL BE PRESSURE TREATED.
2. ALL WOOD SHALL BE DOUGLAS FIR #2 OR BETTER.
3. SMOKE PARTITIONS, FIRE PARITIONS, AND FIRE BARRIERS SHALL BE FULL HEIGHT WALLS.
4. **THIS BUILDING WILL BE CONSTRUCTED UTILIZING PRECAST CONCRETE PANELS. THE CONTRACTORS ARE REPSONSIBLE FOR COORDINATING WITH THE PRECASTER AND G.C. ALL LOCATIONS FOR RECESSED ITEMS, SLEEVES, STEEL EMBEDS, ETC. REQUIRED FOR INSTALLATION OF THE SYSTEMS INDICATED IN THE CONTRACT DOCUMENTS. SUBCONTRACTORS SHALL COORDINATE SHOP DRAWINGS WITH PRECAST MANUFACTURER**
5. **THE CONTRACTORS SHALL INCLUDE IN BASE BID ALL MATERIALS AND THE COSTS REQUIRED FOR TRAVEL TO THE PRECASTER'S SHOP FOR THE INSTALLATION OF THE BOXES, CONDUITS, SLEEVES & ETC. PRIOR TO POURING OF THE PRECAST PANELS.**

GENERAL NOTES PH 1 PART B
1/4" = 1'-0"

LICENSED ARCHITECT AR-986981
KYNDELL M. MADSEN STATE OF IDAHO
2/24/25

DATE

PHASE 1 PART B FOR:
TWIN FALLS COUNTY - WRIGHT AVE JAIL
2515 Wright Ave, Twin Falls, ID 83301
PH 1 PART B CONTROL ROOM ENLARGED

Laughlin Ricks Architecture
architecture/planning
134 3RD Ave East, * Twin Falls, Idaho 83301
(208) 736-8050

DATE: 2/24/25
KM — Drawn
RCR — Checked
#23029 — PROJECT #

A1B-2.5

1. ANY LOCATION WHERE WOOD IS TOUCHING CONCRETE, MASONRY, CMU, OR STEEL SHALL BE PRESSURE TREATED.
2. ALL WOOD SHALL BE DOUGLAS FIR #2 OR BETTER.
3. SMOKE PARTITIONS, FIRE PARITIONS, AND FIRE BARRIERS SHALL BE FULL HEIGHT WALLS.
4. **THIS BUILDING WILL BE CONSTRUCTED UTILIZING PRECAST CONCRETE PANELS. THE CONTRACTORS ARE REPSONSIBLE FOR COORDINATING WITH THE PRECASTER AND G.C. ALL LOCATIONS FOR RECESSED ITEMS, SLEEVES, STEEL EMBEDS, ETC. REQUIRED FOR INSTALLATION OF THE SYSTEMS INDICATED IN THE CONTRACT DOCUMENTS. SUBCONTRACTORS SHALL COORDINATE SHOP DRAWINGS WITH PRECAST MANUFACTURER**
5. **THE CONTRACTORS SHALL INCLUDE IN BASE BID ALL MATERIALS AND THE COSTS REQUIRED FOR TRAVEL TO THE PRECASTER'S SHOP FOR THE INSTALLATION OF THE BOXES, CONDUITS, SLEEVES & ETC. PRIOR TO POURING OF THE PRECAST PANELS.**

GENERAL NOTES PH 1 PART B
1/4" = 1'-0"

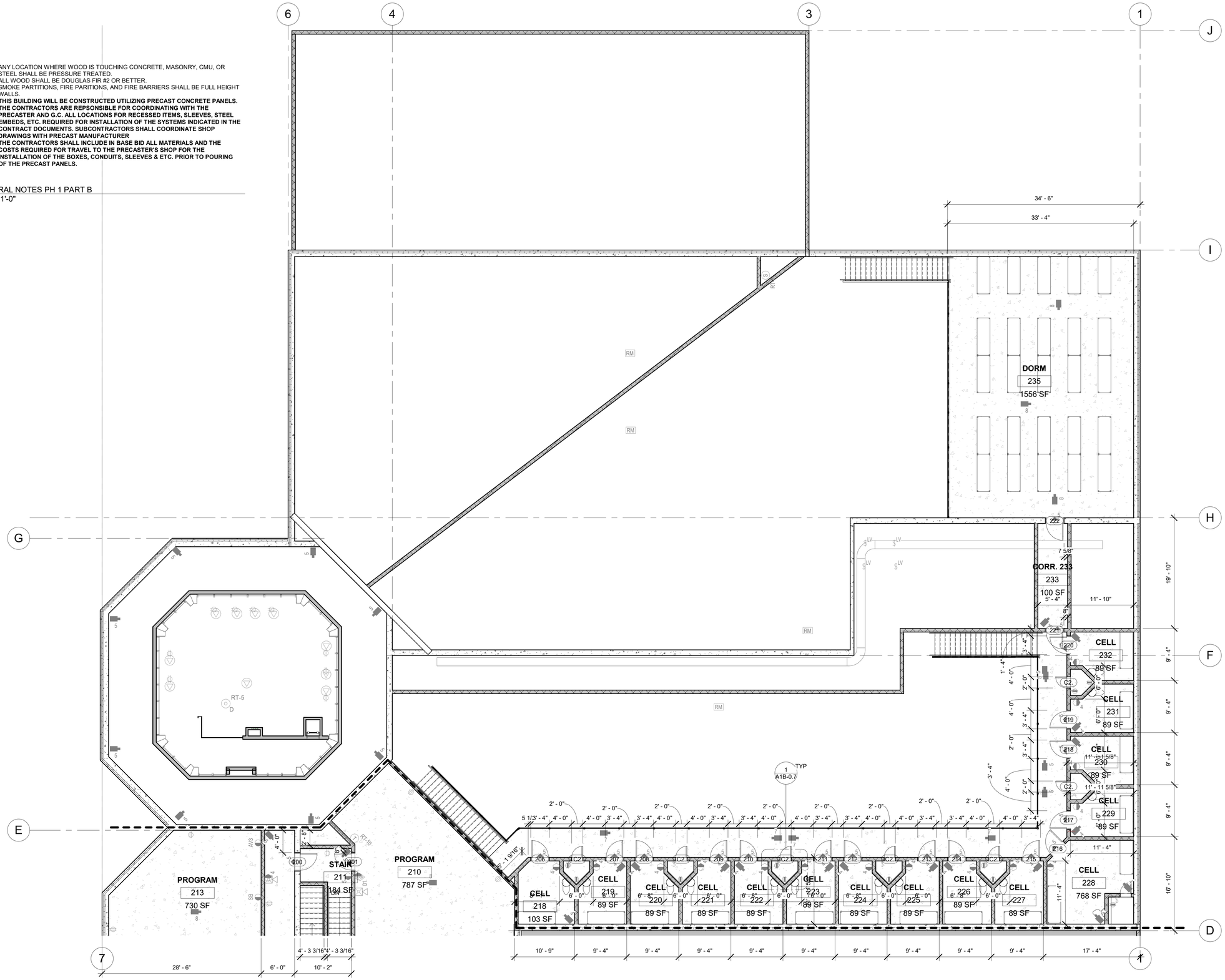

1 PHASE 1 PART B MEZZANINE - Callout 1
1/8" = 1'-0"

LICENSED ARCHITECT
AR-986981
KYNDELL M. MADSEN
STATE OF IDAHO
2/24/25

DATE

PHASE 1 PART B FOR:
TWIN FALLS COUNTY - WRIGHT AVE JAIL
2515 Wright Ave, Twin Falls, ID 83301
ENLARGED MEZZANINE LEVEL

Laughlin Ricks Architecture
architecture/planning
134 3RD Ave East * Twin Falls, Idaho 83301
(208) 736-8050

DATE: 2/24/25
KM Drawn
RCR Checked
#23029
PROJECT #

A1B-2.6

1. ANY LOCATION WHERE WOOD IS TOUCHING CONCRETE, MASONRY, CMU, OR STEEL SHALL BE PRESSURE TREATED.
2. ALL WOOD SHALL BE DOUGLAS FIR #2 OR BETTER.
3. SMOKE PARTITIONS, FIRE PARITIONS, AND FIRE BARRIERS SHALL BE FULL HEIGHT WALLS.
4. **THIS BUILDING WILL BE CONSTRUCTED UTILIZING PRECAST CONCRETE PANELS. THE CONTRACTORS ARE REPSONSIBLE FOR COORDINATING WITH THE PRECASTER AND G.C. ALL LOCATIONS FOR RECESSED ITEMS, SLEEVES, STEEL EMBEDS, ETC. REQUIRED FOR INSTALLATION OF THE SYSTEMS INDICATED IN THE CONTRACT DOCUMENTS. SUBCONTRACTORS SHALL COORDINATE SHOP DRAWINGS WITH PRECAST MANUFACTURER**
5. **THE CONTRACTORS SHALL INCLUDE IN BASE BID ALL MATERIALS AND THE COSTS REQUIRED FOR TRAVEL TO THE PRECASTER'S SHOP FOR THE INSTALLATION OF THE BOXES, CONDUITS, SLEEVES & ETC. PRIOR TO POURING OF THE PRECAST PANELS.**

GENERAL NOTES PH 1 PART B
1/4" = 1'-0"

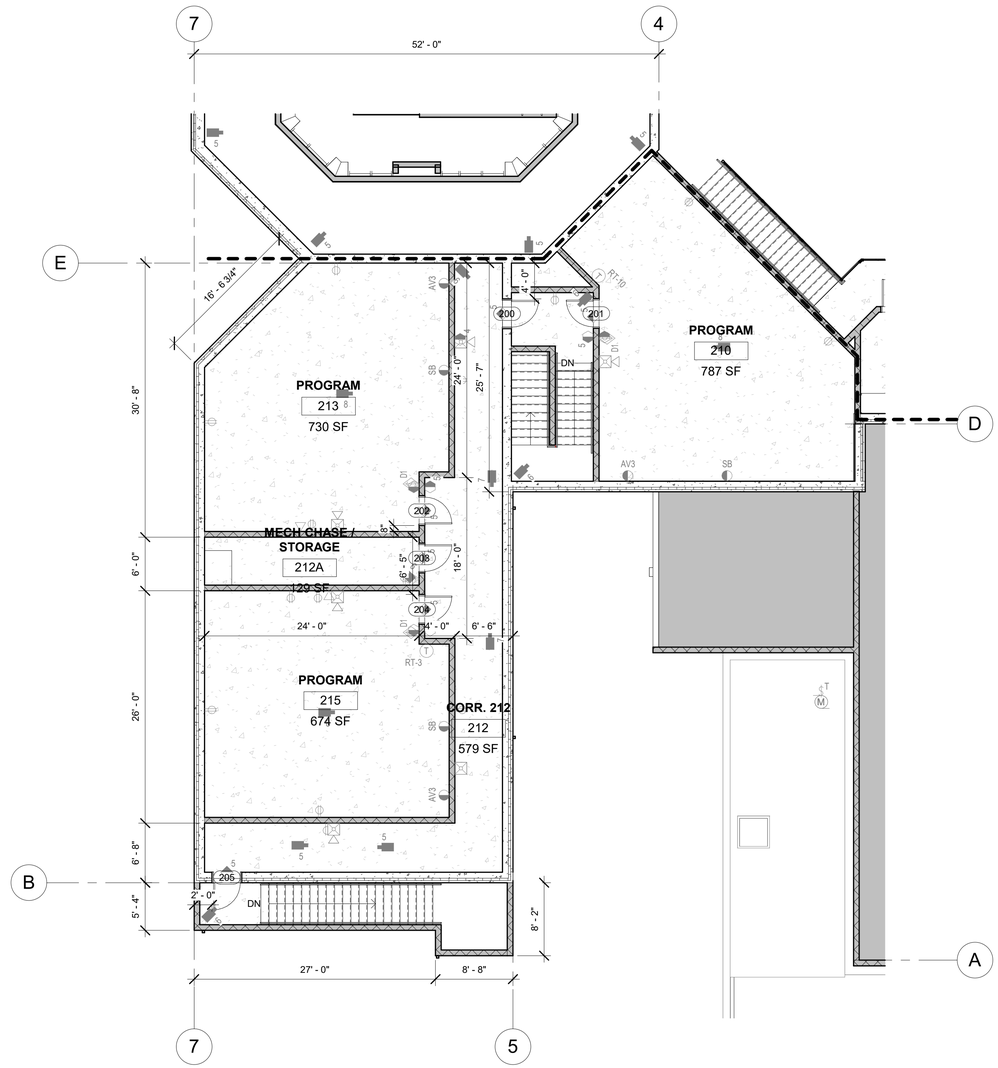

PHASE 1 PART B PROGRAMMING 2ND FLOOR
1/8" = 1'-0"

LICENSED ARCHITECT AR-986981
KYNDELL M. MADSEN STATE OF IDAHO
2/24/25

DATE

PHASE 1 PART B FOR:
TWIN FALLS COUNTY - WRIGHT AVE JAIL
2515 Wright Ave, Twin Falls, ID 83301
ENLARGED 2ND LEVEL PROGRAMMING

Laughlin Ricks Architecture
architecture/planning
134 3RD Ave East, * Twin Falls, Idaho 83301
(208) 736-8050

DATE: 2/24/25
KM Drawn
RCR Checked
#23029 PROJECT #

A1B-2.7

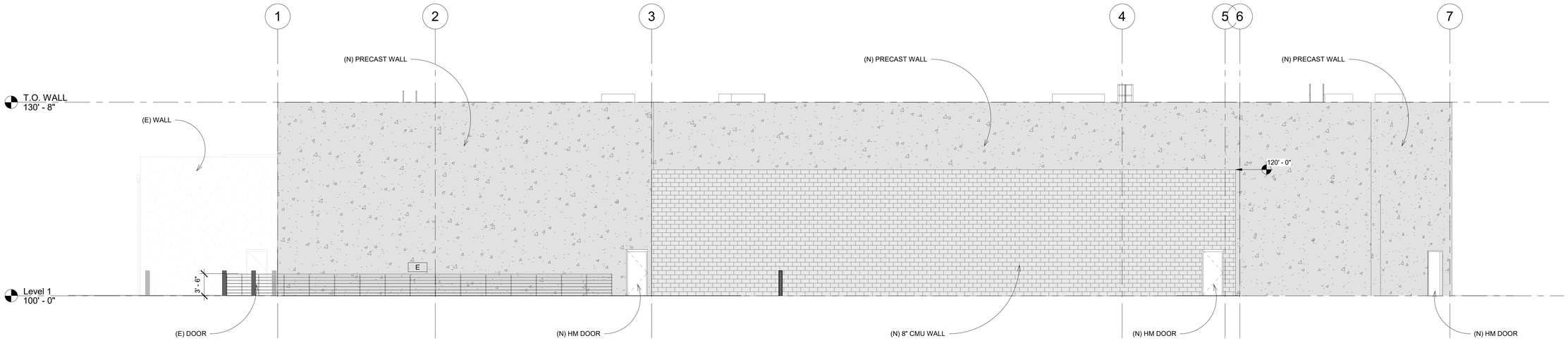

1 PHASE 1 PART B NORTH 1
1/8" = 1'-0"

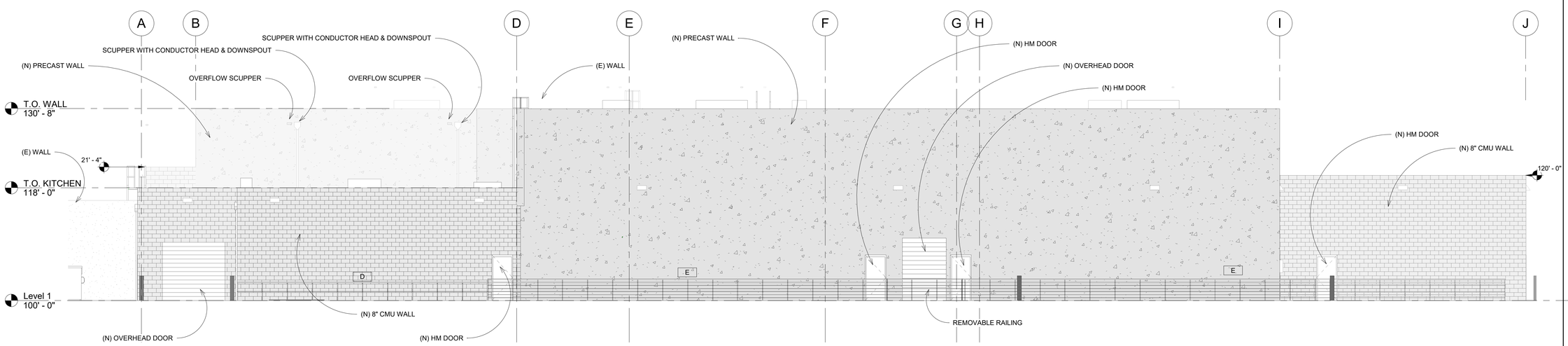

2 PHASE 1 PART B EAST 2
1/8" = 1'-0"

LICENSED
ARCHITECT
AR-986981
KYNDELL M. MADSEN
STATE OF IDAHO
2/24/25

DATE

PHASE 1 PART B FOR:
TWIN FALLS COUNTY - WRIGHT AVE JAIL
2515 Wright Ave, Twin Falls, ID 83301
PH 1 PART B - EXTERIOR ELEVATIONS

Laughlin Ricks Architecture
architecture/planning
134 3RD Ave East, * Twin Falls, Idaho 83301
(208) 736-8050

DATE: 2/24/25
KM — Drawn
RCR — Checked
#23029 — PROJECT #

A1B-3.0

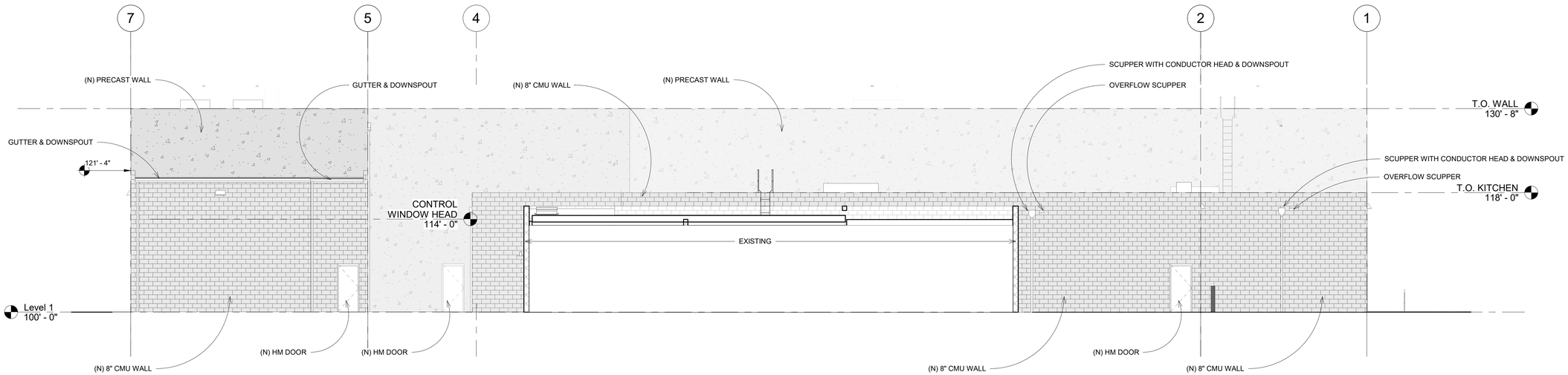

3 PHASE 1 PART B SOUTH 2
1/8" = 1'-0"

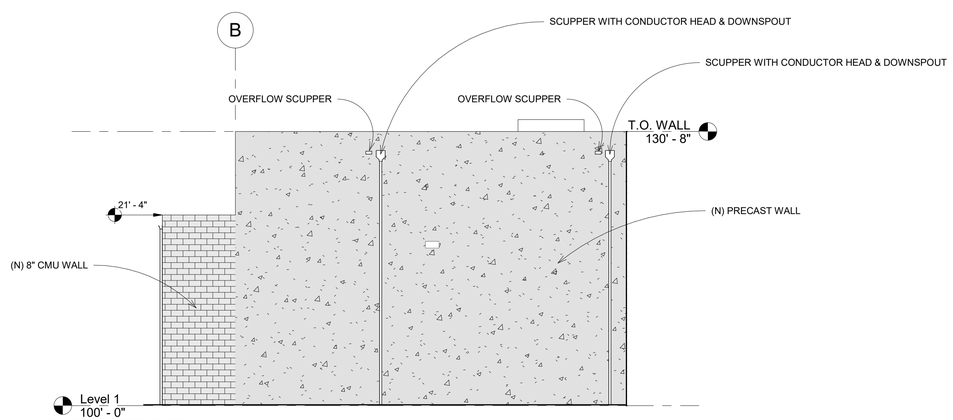

1 PHASE 1 PART B EAST 1
1/8" = 1'-0"

LICENSED
ARCHITECT
AR-986981
KYNDELL M. MADSEN
STATE OF IDAHO
2/24/25

DATE

PHASE 1 PART B FOR:
TWIN FALLS COUNTY - WRIGHT AVE JAIL
2515 Wright Ave, Twin Falls, ID 83301
PH 1 PART B - EXTERIOR ELEVATIONS

Laughlin Ricks Architecture
architecture/planning
134 3RD Ave East, * Twin Falls, Idaho 83301
(208) 736-8050

DATE: 2/24/25
KM Drawn
RCR Checked
#23029 PROJECT #

A1B-3.1

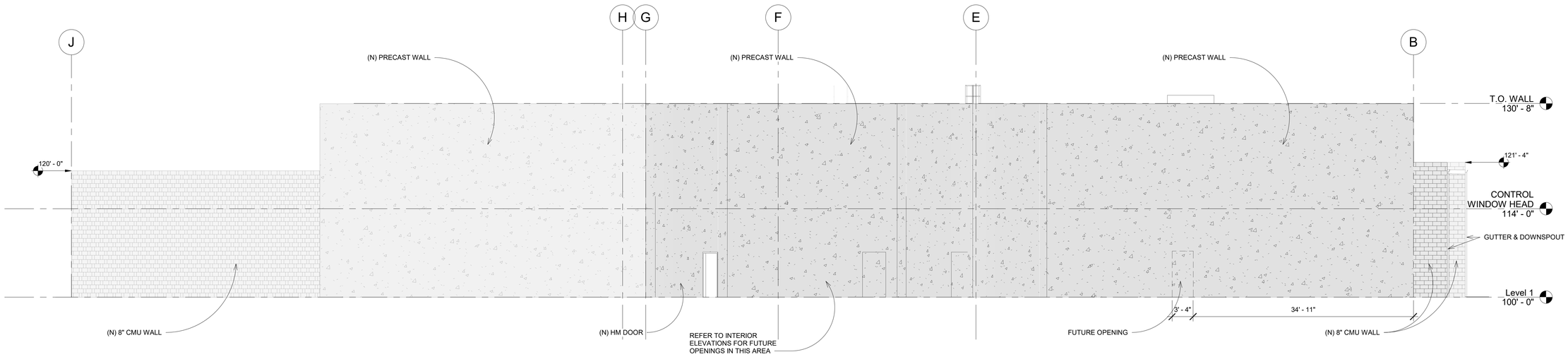

1 PHASE 1 PART B WEST
1/8" = 1'-0"

LICENSED
ARCHITECT
AR-986981

KYNDELL M. MADSEN
STATE OF IDAHO

2/24/25

DATE

PHASE 1 PART B FOR:
TWIN FALLS COUNTY - WRIGHT AVE JAIL
2515 Wright Ave, Twin Falls, ID 83301
PH 1 PART B - EXTERIOR ELEVATION

Laughlin Ricks Architecture
architecture/planning
134 3RD Ave East, * Twin Falls, Idaho 83301
(208) 736-8050

DATE: 2/24/25
KM — Drawn
RCR — Checked
#23029
PROJECT #

A1B-3.2

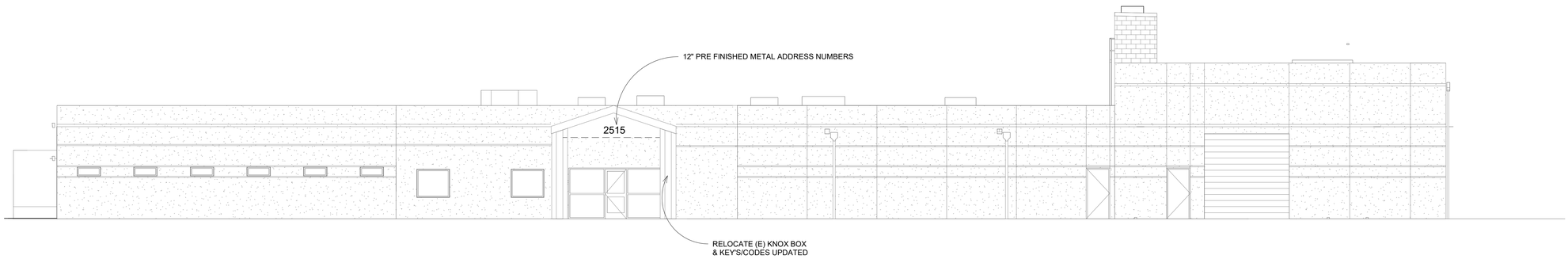

1 PH 1 PART B AREA E SOUTH
1/8" = 1'-0"

LICENSED
ARCHITECT
AR-986981

KYNDELL M. MADSEN
STATE OF IDAHO

2/24/25

DATE

PHASE 1 PART B FOR:
TWIN FALLS COUNTY - WRIGHT AVE JAIL
2515 Wright Ave, Twin Falls, ID 83301
PH1 PART B - AREA E - ELEVATION

Laughlin Ricks Architecture
architecture/planning
134 3RD Ave East, * Twin Falls, Idaho 83301
(208) 736-8050

DATE: 2/24/25
KM Drawn
RCR Checked
#23029 PROJECT #

A1B-3.3

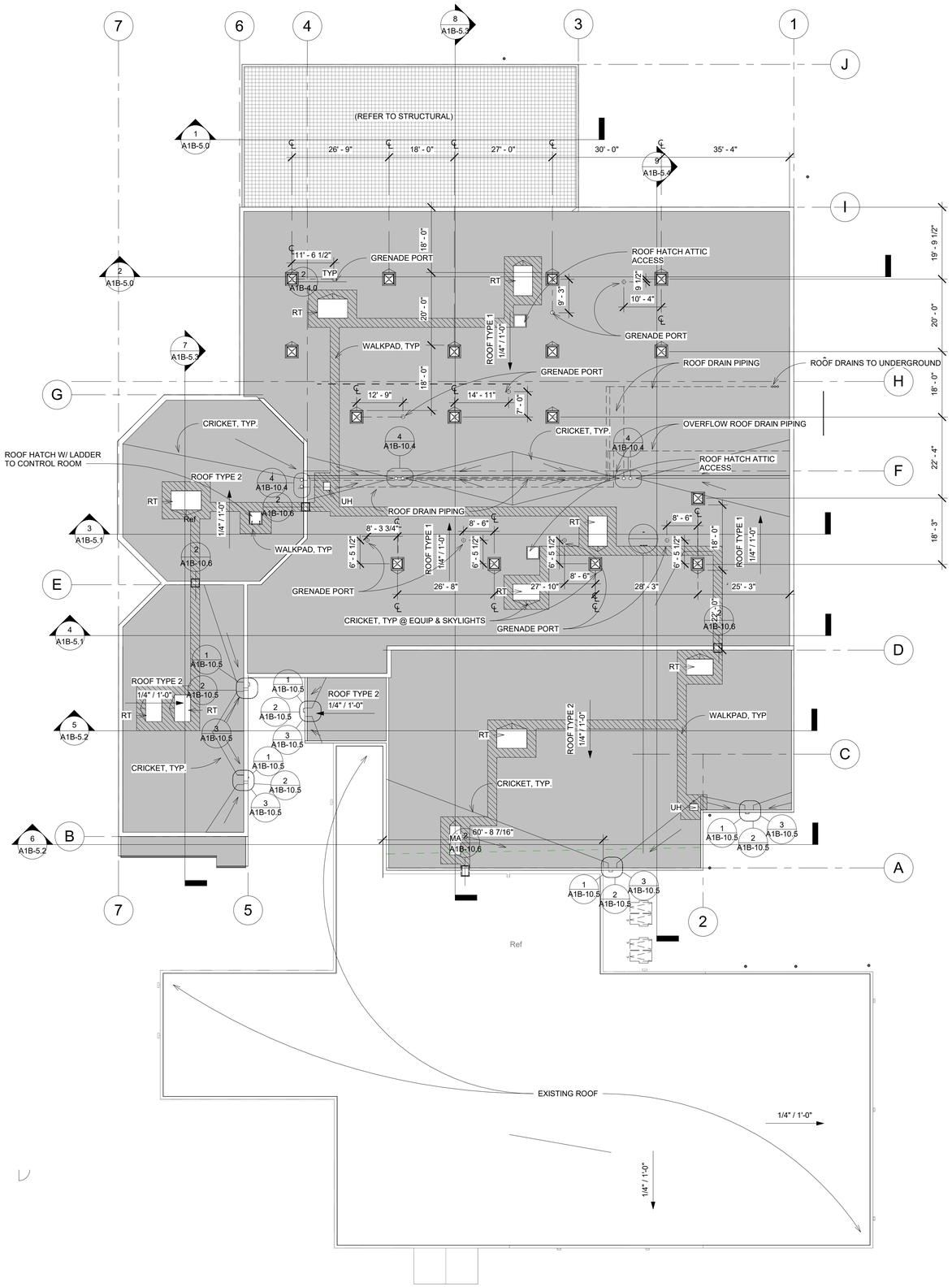

1 PHASE 1 PART B ROOF PLAN
1/16" = 1'-0"

ROOF TYPE 1

80 MIL TPO ROOF MEMBRANE MECHANICALLY FASTENED
COVERBOARD
R-38 INSULATION
5/8 BARRIER BOARD
ROOF DECK (REFER TO STRUCTURAL)
6" METAL STUD FRAMING @ 12'-0" O.C. MAX
TOPPING SLAB (REFER TO STRUCTURAL)
CONCRETE DOUBLE T'S (REFER TO STRUCTURAL)

(1) HOUR RATED, CLASS "B"
ROOF SYSTEM REQUIRED

ROOF TYPE 2

80 MIL TPO ROOF MEMBRANE MECHANICALLY FASTENED
COVERBOARD
R-38 INSULATION
5/8 BARRIER BOARD
ROOF DECK (REFER TO STRUCTURAL)
STRUCTURE (REFER TO STRUCTURAL)
SPRAY APPLIED FIREPROOFING (2 HR)

(1) HOUR RATED, CLASS "B"
ROOF SYSTEM REQUIRED

GRENADE PORTS SHALL BE 6" STEEL CASING
EXTENDING BELOW THE CONCRETE T'S WITH 6"
LOCKABLE, WATERTIGHT HINGED WEATHER CAP LID

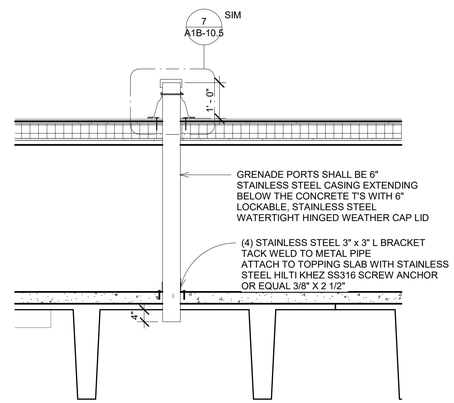

2 GERNADE PORT
1/2" = 1'-0"

LICENSED ARCHITECT
AR-986981
KYNDELL M. MADSEN
STATE OF IDAHO
2/24/25

DATE

PHASE 1 PART B FOR:
TWIN FALLS COUNTY - WRIGHT AVE JAIL
2515 Wright Ave, Twin Falls, ID 83301
PH 1 PART B - ROOF PLAN

Laughlin Ricks Architecture
architecture/planning
134 3RD Ave East * Twin Falls, Idaho 83301
(208) 736-8050

DATE: 2/24/25
KM Drawn
RCR Checked
#23029 PROJECT #

A1B-4.0

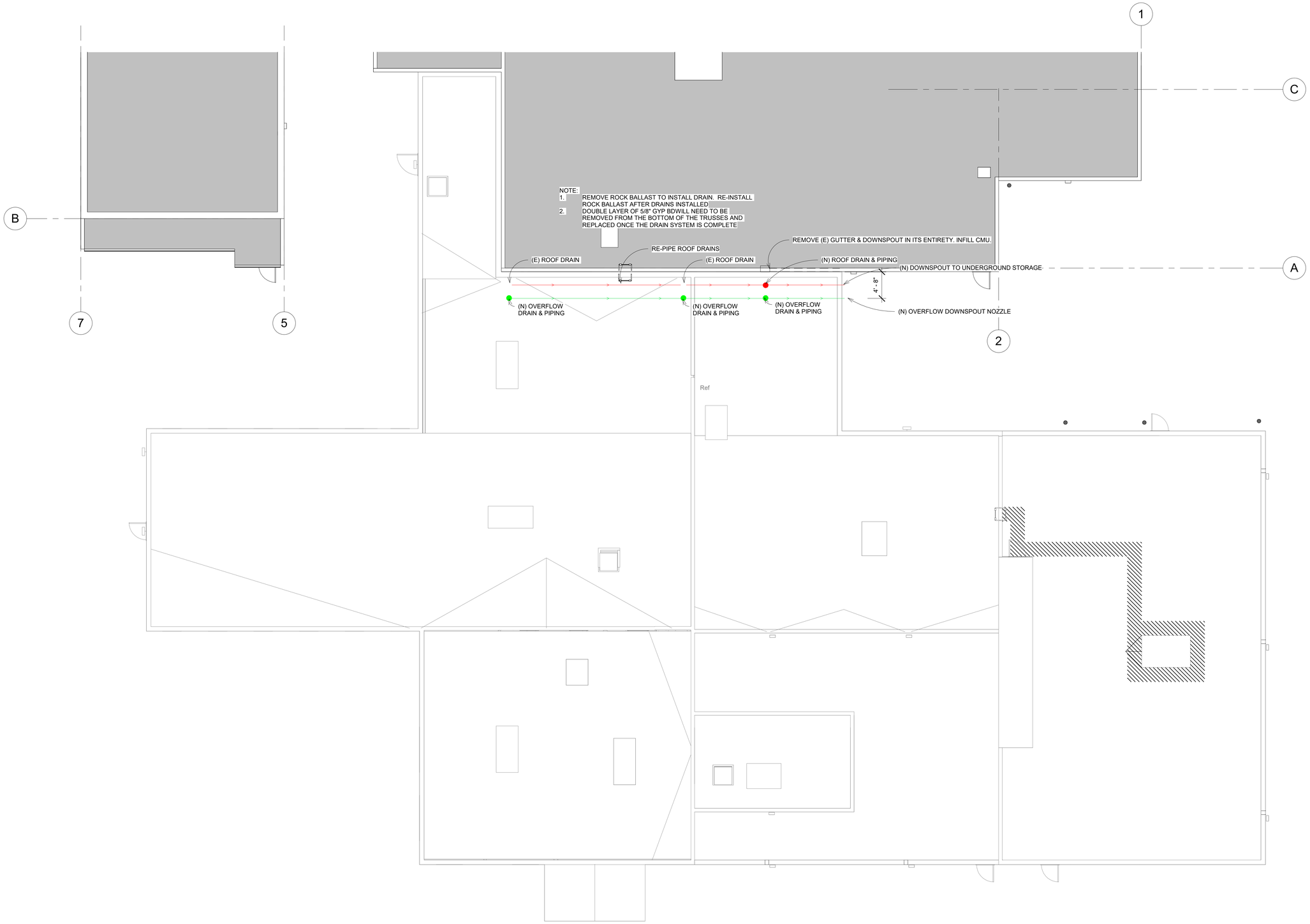

1 PH 1 PART B (E) ROOF PLAN
1/8" = 1'-0"

LICENSED ARCHITECT AR-986981

KYNDELL M. MADSEN
STATE OF IDAHO

2/24/25

DATE

PHASE 1 PART B FOR:
TWIN FALLS COUNTY - WRIGHT AVE JAIL
2515 Wright Ave, Twin Falls, ID 83301
PH 1 PART B AREA E ROOF PLAN

Laughlin Ricks Architecture
architecture/planning
134 3RD Ave East, * Twin Falls, Idaho 83301
(208) 736-8050

DATE: 2/24/25

KM	RCR
Drawn	Checked

#23029
PROJECT #

A1B-4.1

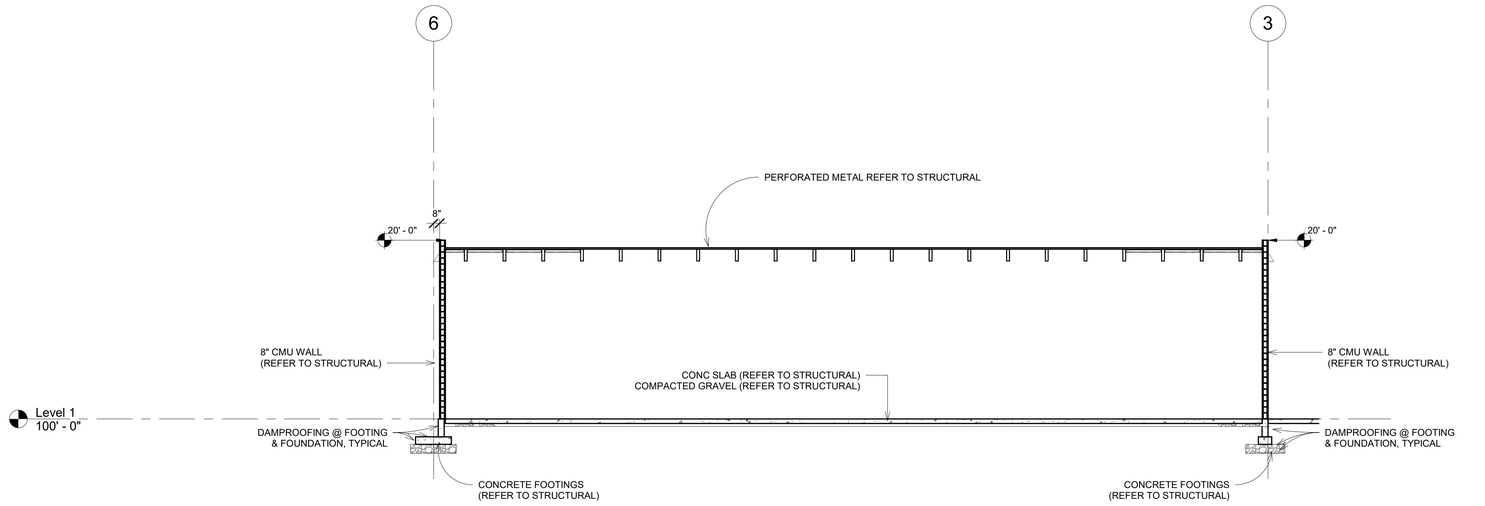

1 Section B1
1/8" = 1'-0"

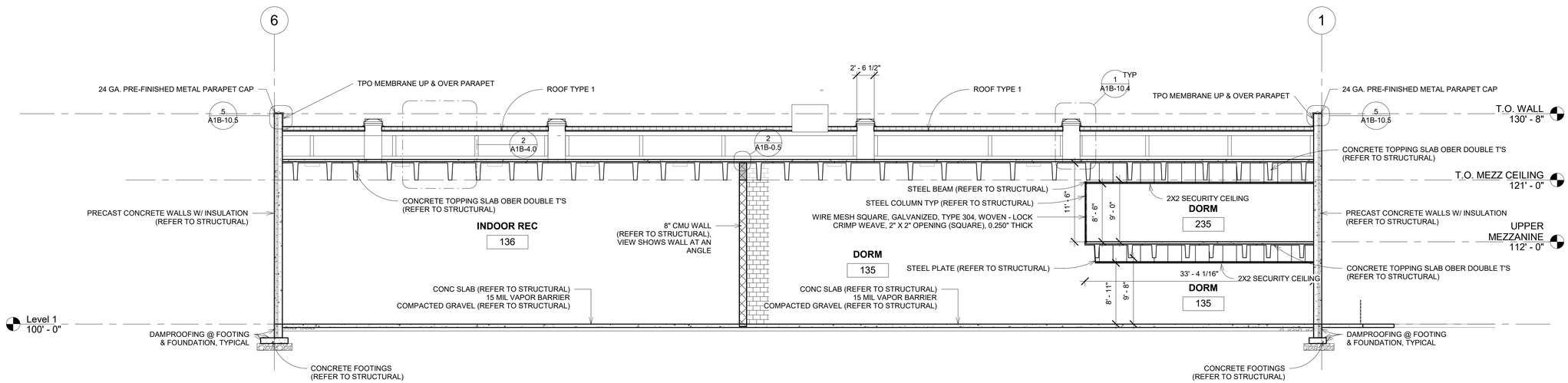

2 Section B2
1/8" = 1'-0"

LICENSED
ARCHITECT
AR-986981
KYNDELL M. MADSEN
STATE OF IDAHO
2/24/25

DATE

PHASE 1 PART B FOR:
TWIN FALLS COUNTY - WRIGHT AVE JAIL
2515 Wright Ave, Twin Falls, ID 83301
PH 1 PART B - BUILDING SECTIONS

Laughlin Ricks Architecture
architecture/planning
134 3RD Ave East, * Twin Falls, Idaho 83301
(208) 736-8050

DATE: 2/24/25
KM — Drawn
RCR — Checked
#23029 — PROJECT #

A1B-5.0

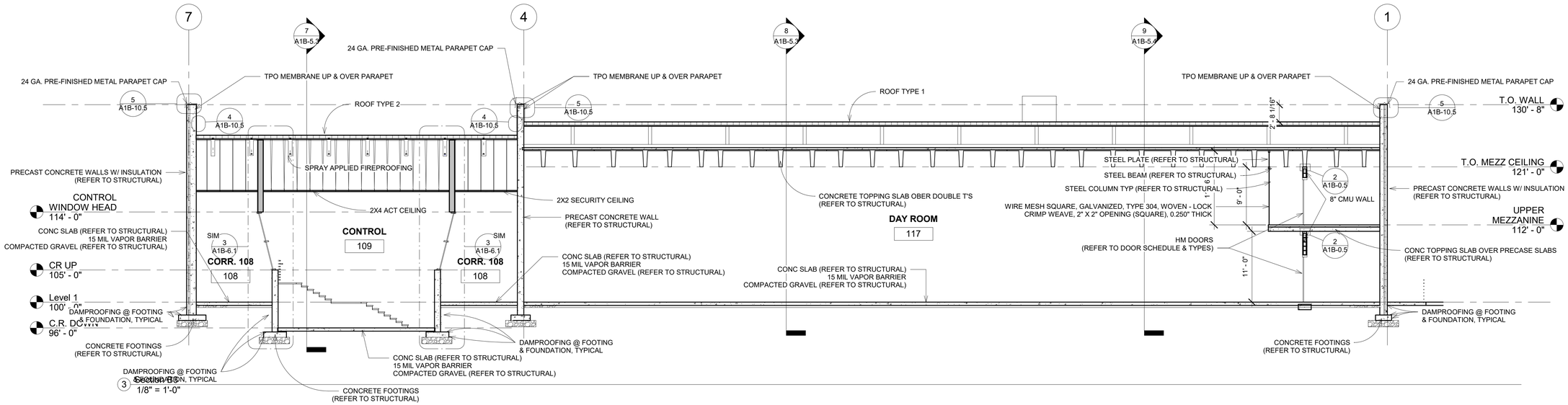

3 Section B3
1/8" = 1'-0"

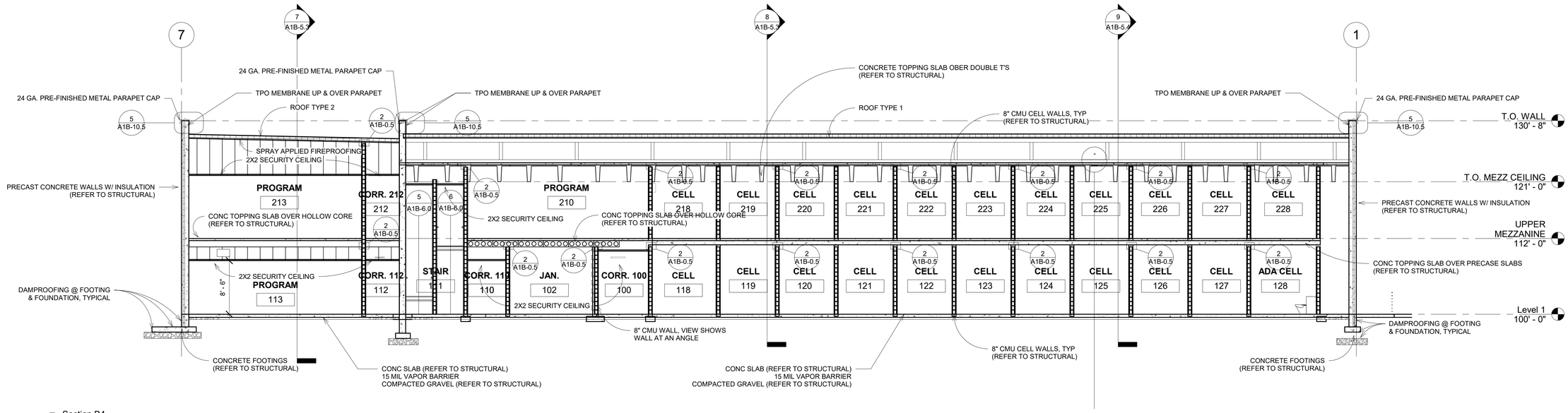

4 Section B4
1/8" = 1'-0"

LICENSED ARCHITECT AR-986981
KYNDELL M. MADSEN STATE OF IDAHO
2/24/25

DATE

PHASE 1 PART B FOR:
TWIN FALLS COUNTY - WRIGHT AVE JAIL
2515 Wright Ave, Twin Falls, ID 83301
PH 1 PART B - BUILDING SECTIONS

Laughlin Ricks Architecture
architecture/planning
134 3RD Ave East, * Twin Falls, Idaho 83301
(208) 736-8050

DATE: 2/24/25
KM Drawn
RCR Checked
#23029 PROJECT #

A1B-5.1

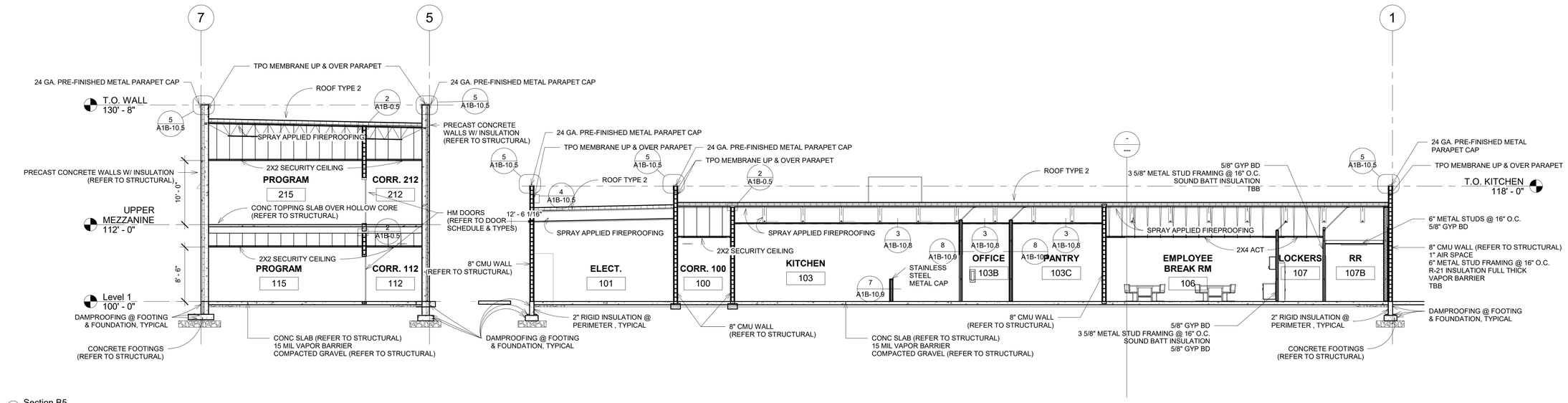

5 Section B5
1/8" = 1'-0"

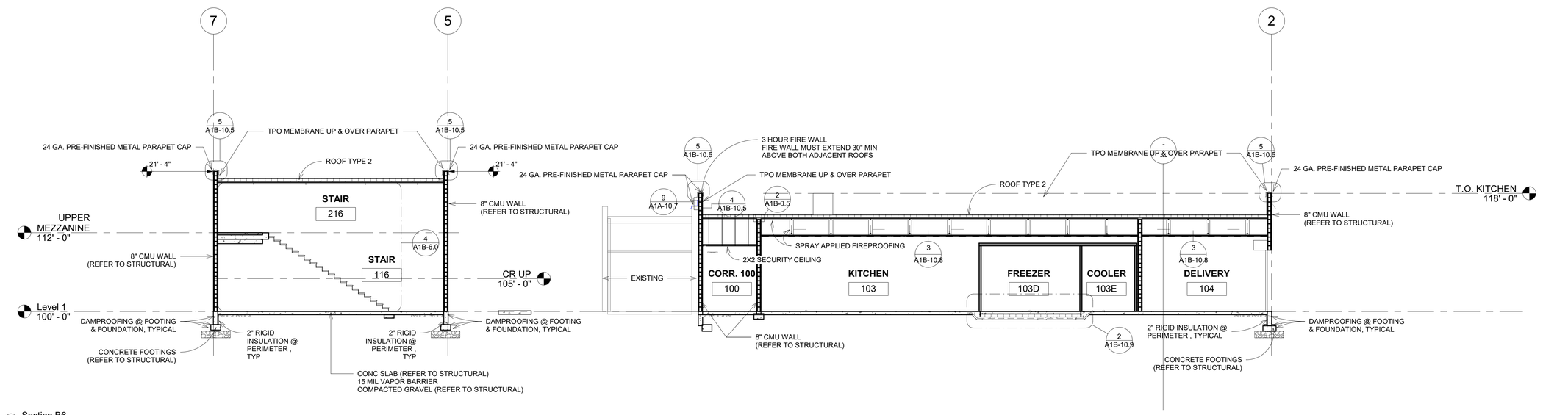

6 Section B6
1/8" = 1'-0"

LICENSED ARCHITECT AR-986981

KYNDELL M. MADSEN STATE OF IDAHO

2/24/25

DATE

PHASE 1 PART B FOR:
TWIN FALLS COUNTY - WRIGHT AVE JAIL
2515 Wright Ave, Twin Falls, ID 83301
PH 1 PART B - BUILDING SECTIONS

Laughlin Ricks Architecture
architecture/planning
134 3RD Ave East, * Twin Falls, Idaho 83301
(208) 736-8050

DATE: 2/24/25

KM — Drawn
RCR — Checked

#23029
PROJECT #

A1B-5.2

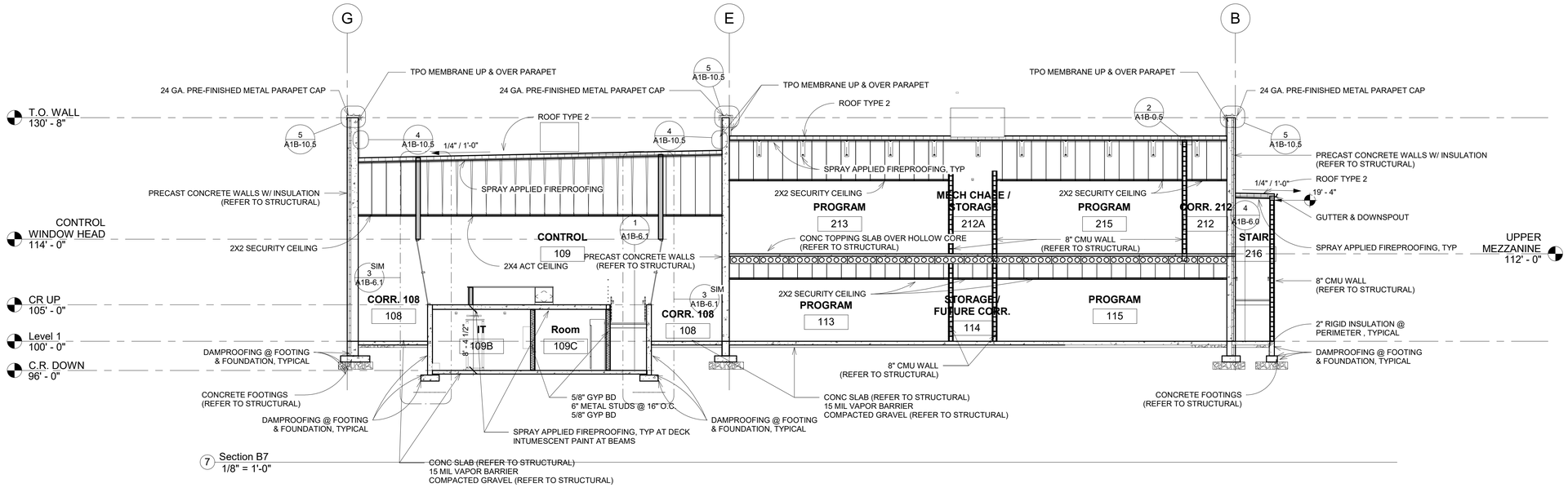

7 Section B7
1/8" = 1'-0"

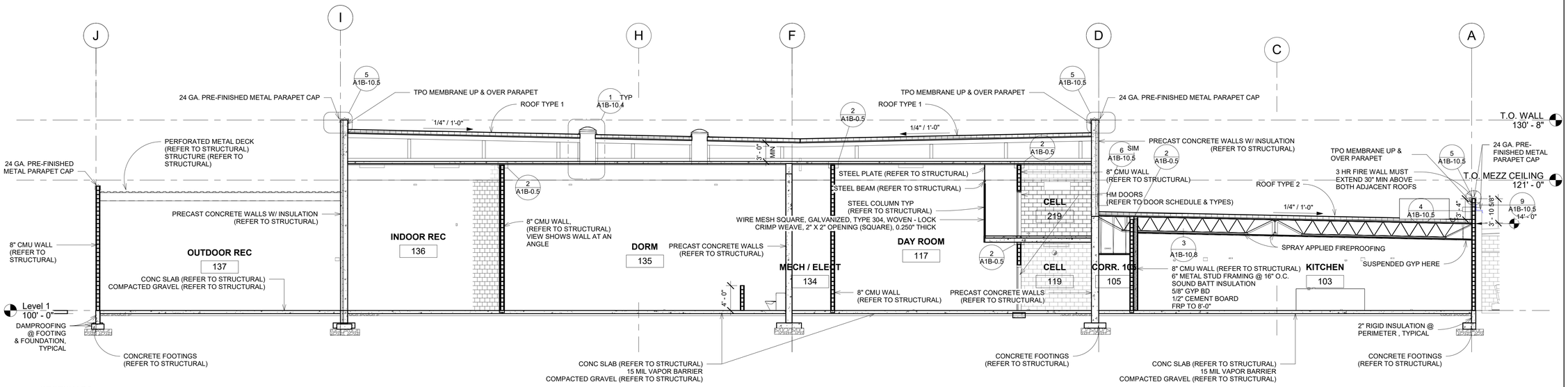

8 SECTION B8
1/8" = 1'-0"

LICENSED
ARCHITECT
AR-986981
KYNDELL M. MADSEN
STATE OF IDAHO
2/24/25

DATE

PHASE 1 PART B FOR:
TWIN FALLS COUNTY - WRIGHT AVE JAIL
2515 Wright Ave, Twin Falls, ID 83301
PH 1 PART B - BUILDING SECTIONS

Laughlin Ricks Architecture
architecture/planning
134 3RD Ave East, * Twin Falls, Idaho 83301
(208) 736-8050

DATE: 2/24/25
KM Drawn
RCR Checked
#23029 PROJECT #

A1B-5.3

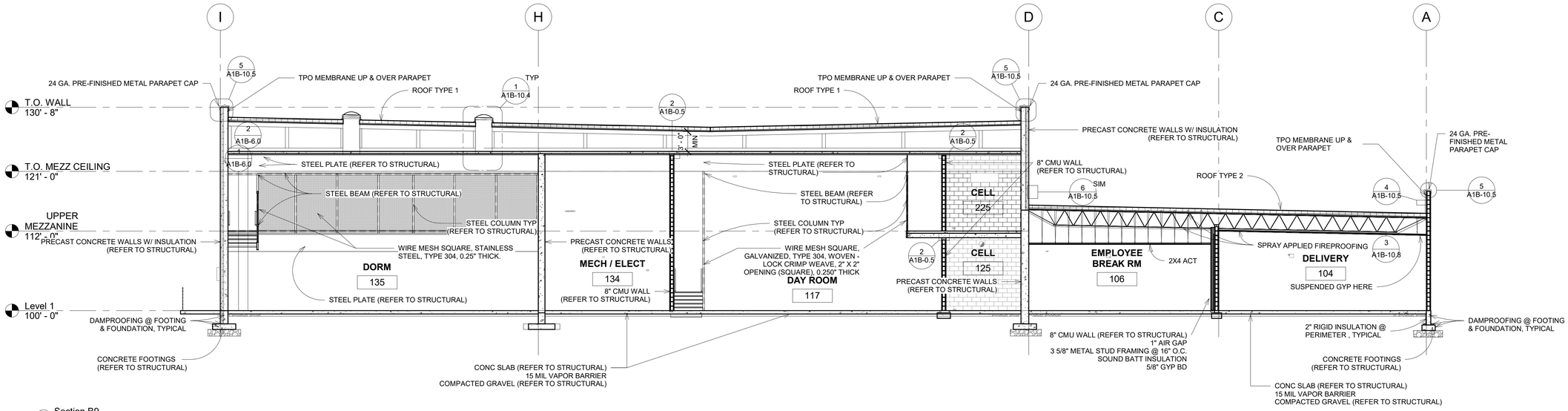

9 Section B9
1/8" = 1'-0"

LICENSED ARCHITECT AR-986981

KYNDELL M. MADSEN
STATE OF IDAHO
2/24/25

DATE

PHASE 1 PART B FOR:
TWIN FALLS COUNTY - WRIGHT AVE JAIL
2515 Wright Ave, Twin Falls, ID 83301
PH 1 PART B - BUILDING SECTIONS

Laughlin Ricks Architecture
architecture/planning
134 3RD Ave East, * Twin Falls, Idaho 83301
(208) 736-8050

DATE: 2/24/25
KM Drawn
RCR Checked
#23029 PROJECT #

A1B-5.4

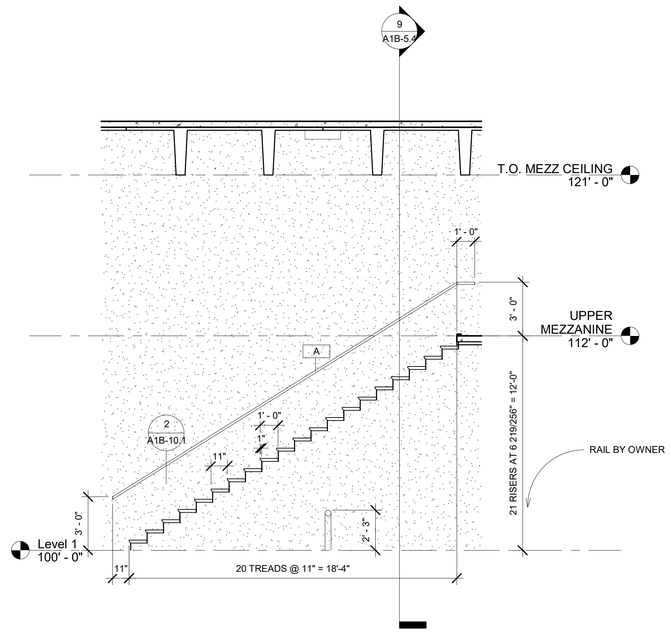

1 STAIR AT WALL
1/4" = 1'-0"

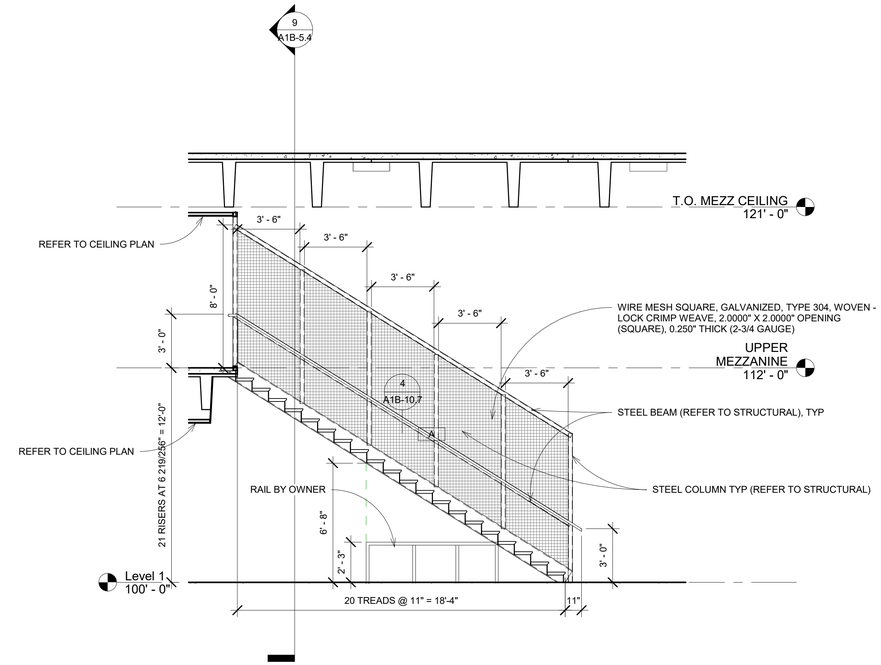

2 STAIR AT MESH
1/4" = 1'-0"

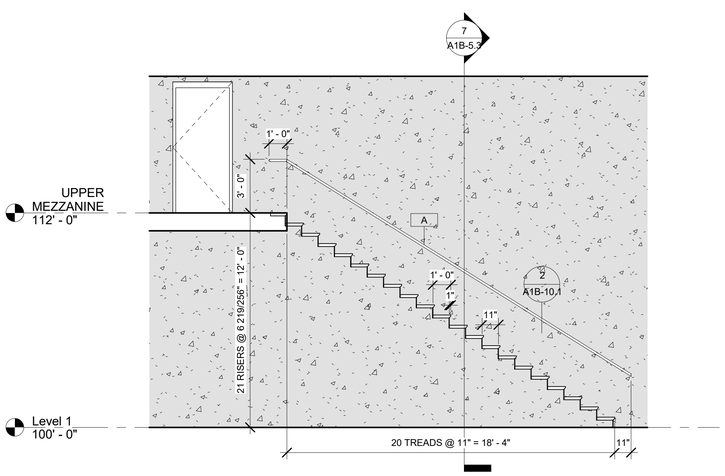

4 STAIR
1/4" = 1'-0"

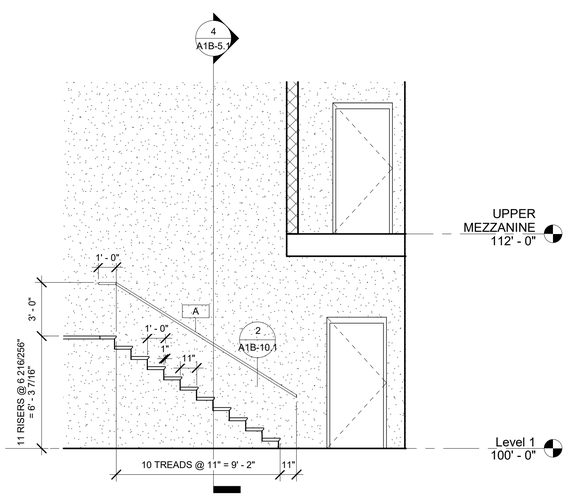

5 STAIR 111 A
1/4" = 1'-0"

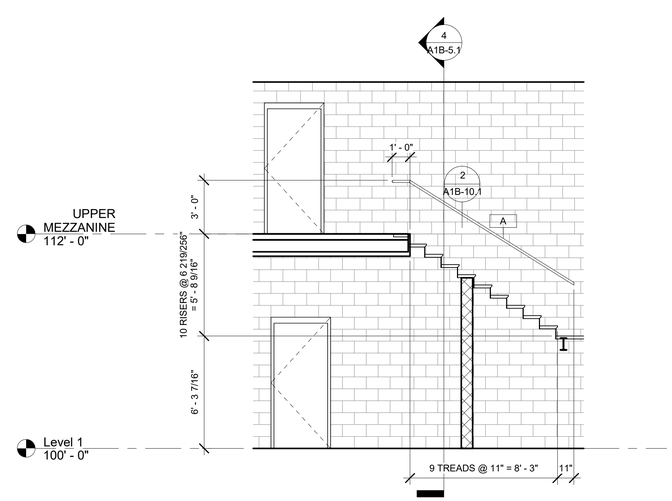

6 STAIR 111 B
1/4" = 1'-0"

LICENSED
ARCHITECT
AR-986981
KYNDELL M. MADSEN
STATE OF IDAHO
2/24/25

DATE

PHASE 1 PART B FOR:
TWIN FALLS COUNTY - WRIGHT AVE JAIL
2515 Wright Ave, Twin Falls, ID 83301
WALL SECTION - STAIRS

Laughlin Ricks Architecture
architecture/planning
134 3RD Ave East, * Twin Falls, Idaho 83301
(208) 736-8050

DATE: 2/24/25
KM Drawn
RCR Checked
#23029 PROJECT #

A1B-6.0

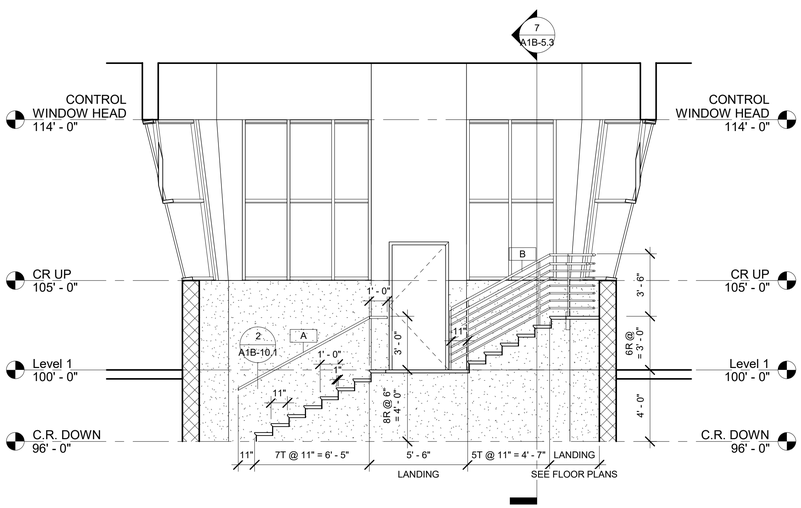

1 CONTROL ROOM STAIR A @ WALL
1/4" = 1'-0"

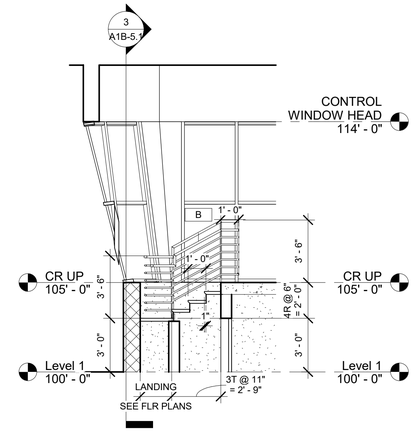

2 CONTROL ROOM STAIR B @ WALL
1/4" = 1'-0"

T.O. WALL
130' - 8"

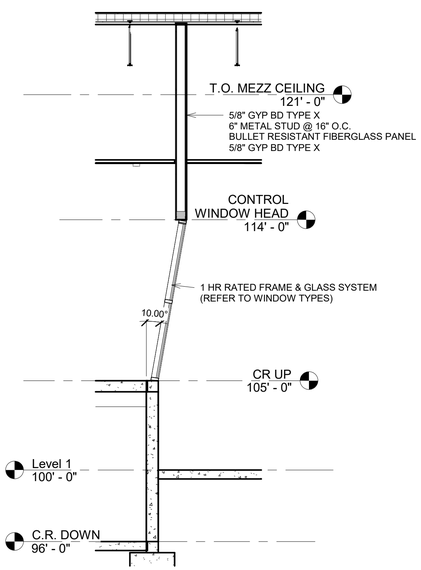

3 CONTROL ROOM AT WINDOW
1/4" = 1'-0"

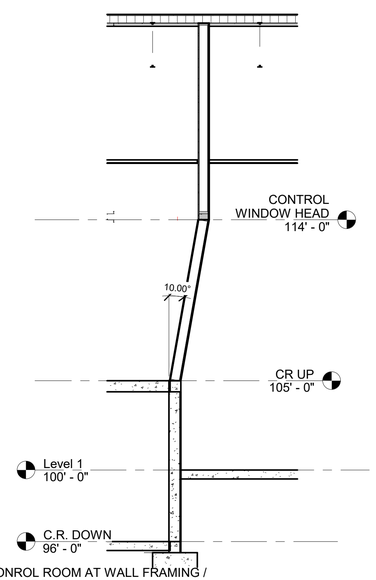

4 CONROL ROOM AT WALL FRAMING / CORNERS
1/4" = 1'-0"

LICENSED
ARCHITECT
AR-986981
KYNDELL M. MADSEN
STATE OF IDAHO
2/24/25

DATE

PHASE 1 PART B FOR:
TWIN FALLS COUNTY - WRIGHT AVE JAIL
2515 Wright Ave, Twin Falls, ID 83301
WALL SECTION - STAIRS

Laughlin Ricks Architecture
architecture/planning
134 3RD Ave East, * Twin Falls, Idaho 83301
(208) 736-8050

DATE: 2/24/25
KM Drawn
RCR Checked
#23029
PROJECT #

A1B-6.1

CEILING KEY

1. 2X2 SECURITY CEILING - ARMSTRONG METALWORKS SECURELOCK PRELUDE XL
NOTE COORDINATE FINAL LOCATIONS OF ACCESS PANELS WITH SUBCONTRACTORS
2. NEW 2X4 ACT CEILING
3. SECURITY GYP BD. CEILING
4. OPEN TO STRUCTURE
5. OPEN TO ABOVE
6. 4" PRECAST SOLID SLAB (REFER TO STRUCTURAL)
7. GYP BD CEILING
8. METAL SECURITY MESH (REFER TO STRUCTURAL)

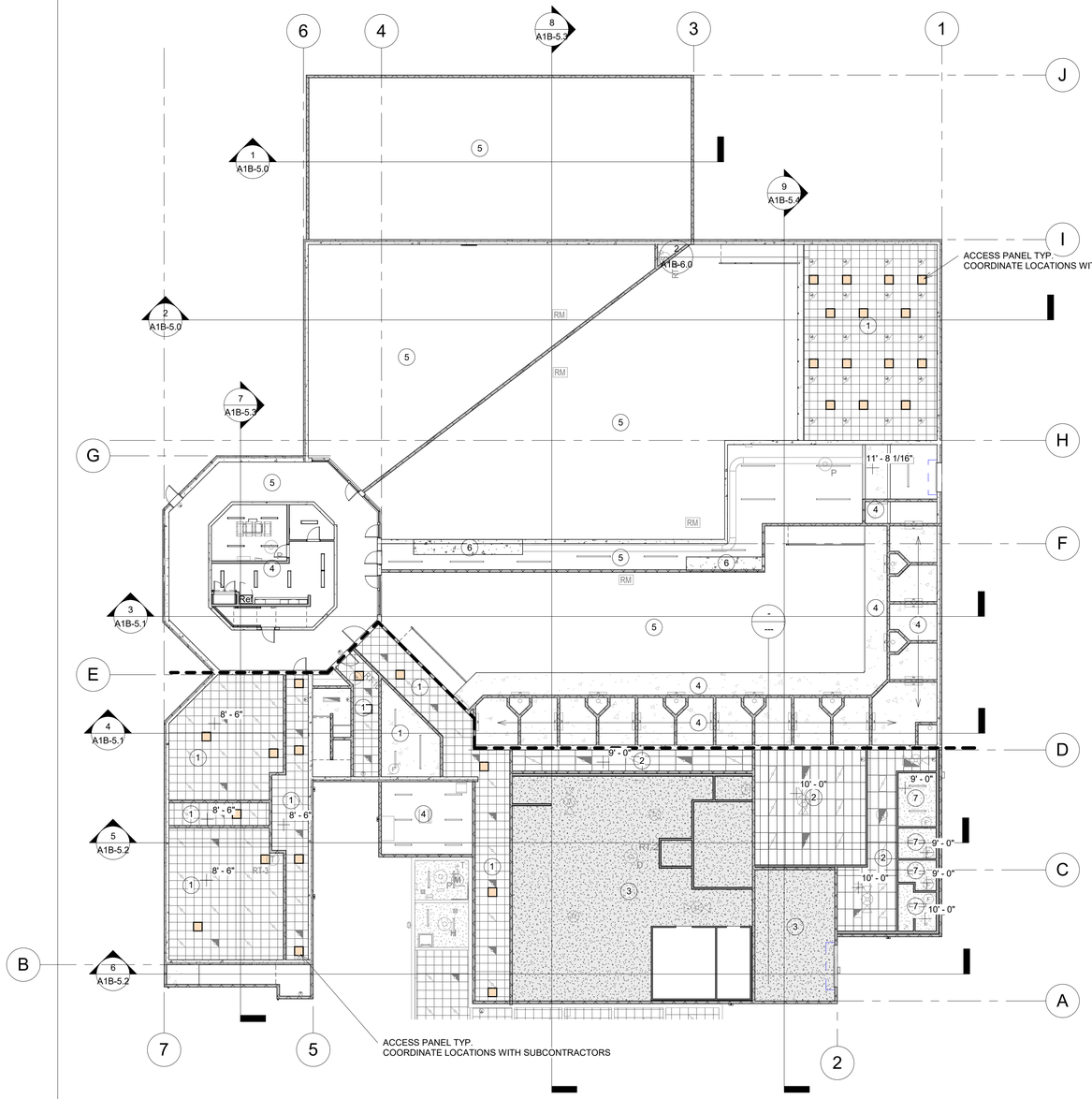

1 PH 1 PART B REFLECTED CEILING PLAN
LOWER
1/16" = 1'-0"

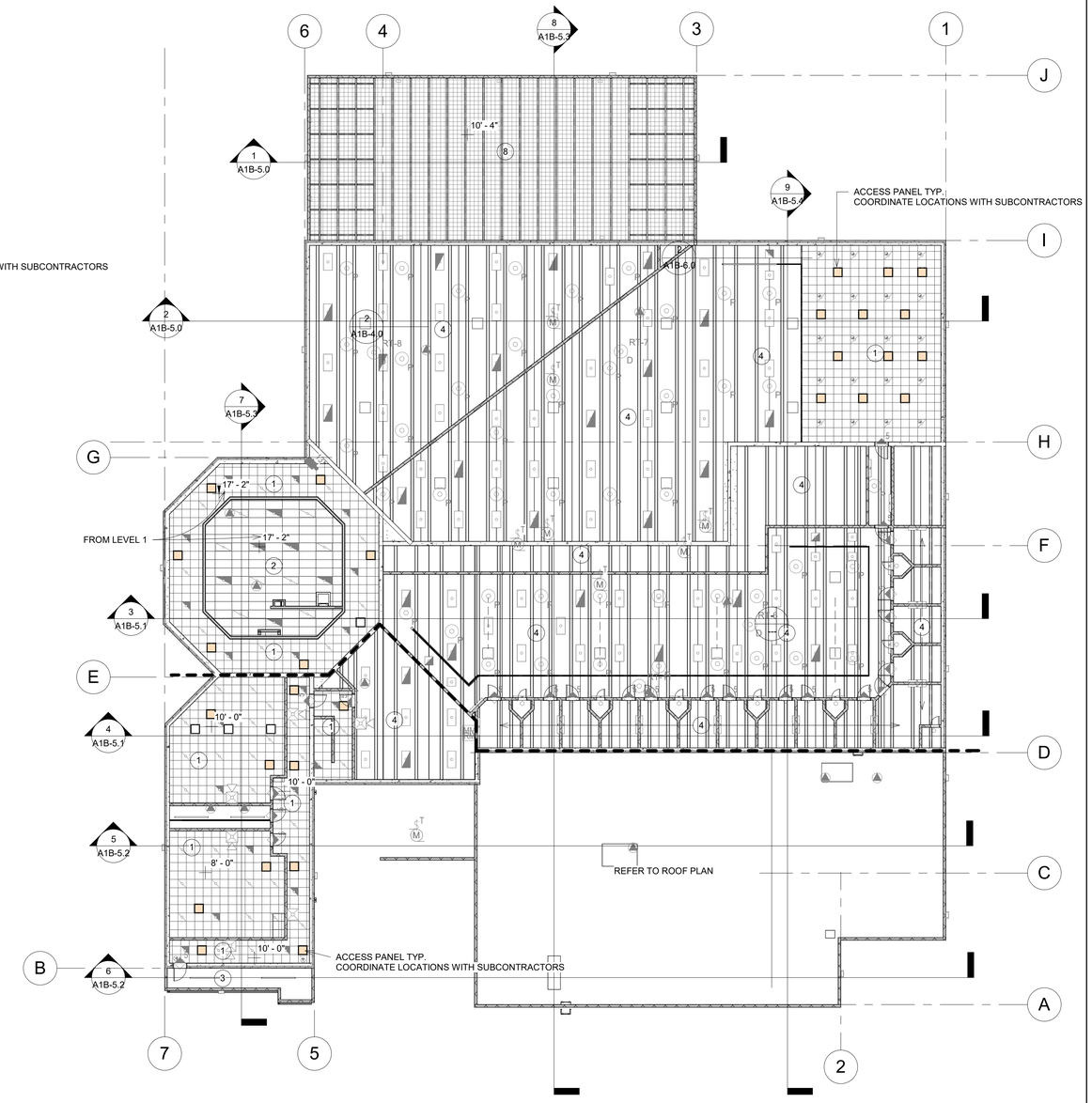

2 PH 1 PART B - UPPER LEVEL
REFLECTED CEILING PLAN
1/16" = 1'-0"

LICENSED
ARCHITECT
AR-986981
KYNDELL M. MADSEN
STATE OF IDAHO
2/24/25

DATE

PHASE 1 PART B FOR:
TWIN FALLS COUNTY - WRIGHT AVE JAIL
2515 Wright Ave, Twin Falls, ID 83301
PH 1 PART B - REFLECTED CEILING PLANS

Laughlin Ricks Architecture
architecture/planning
134 3RD Ave East * Twin Falls, Idaho 83301
(208) 736-8050

DATE: 2/24/25
KM Drawn
RCR Checked
#23029 PROJECT #

A1B-7.0

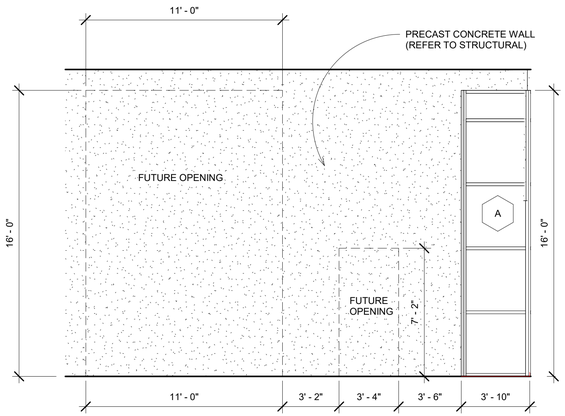

1 CORR 108 N
1/4" = 1'-0"

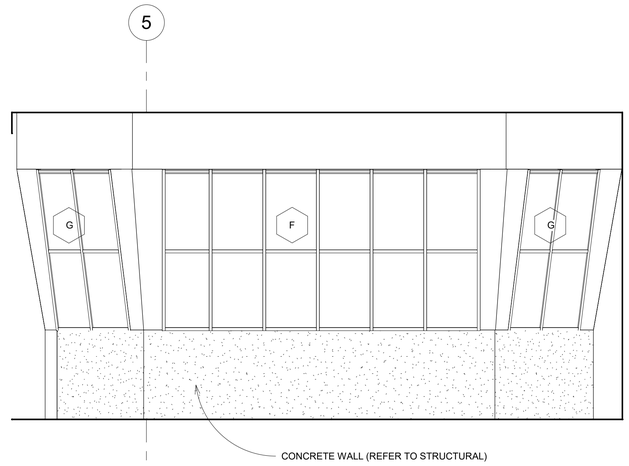

2 CONTROL ROOM EXT N
1/4" = 1'-0"

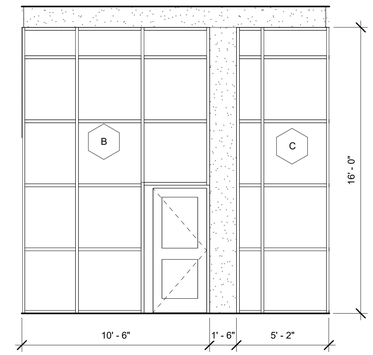

3 CORR 108 NE
1/4" = 1'-0"

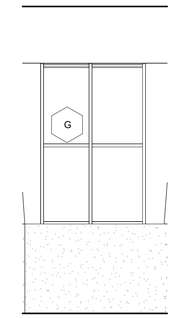

4 CONTROL EXT NE
1/4" = 1'-0"

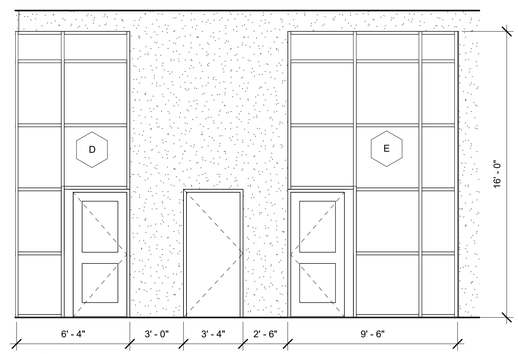

5 CORR 108 E
1/4" = 1'-0"

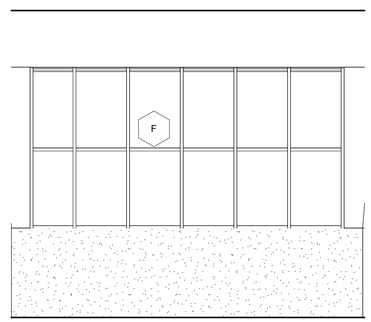

6 CONTROL EXT E
1/4" = 1'-0"

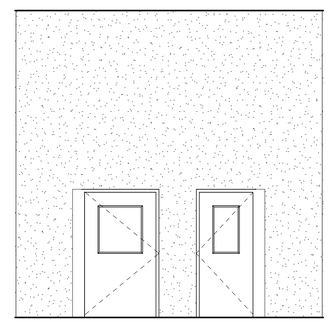

7 CORR 108 SZ
1/4" = 1'-0"

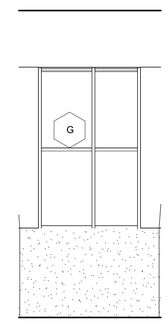

8 CONTROL EXT SE
1/4" = 1'-0"

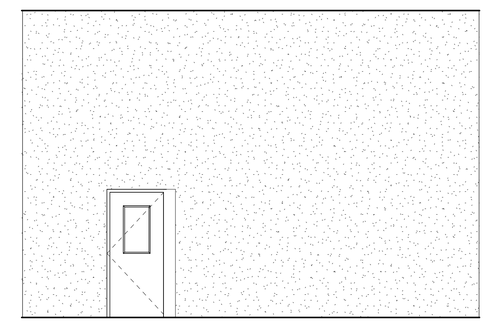

9 CORR 108 S
1/4" = 1'-0"

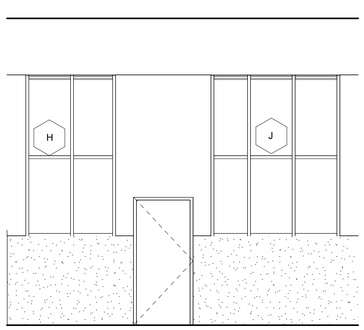

10 CONTROL EXT S
1/4" = 1'-0"

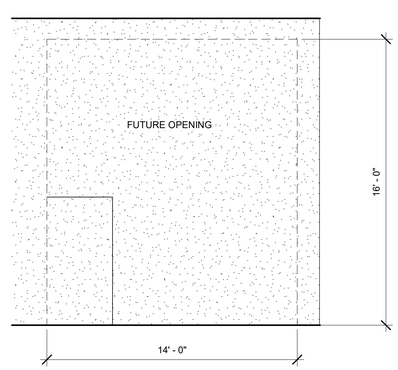

11 CORR 108 SW
1/4" = 1'-0"

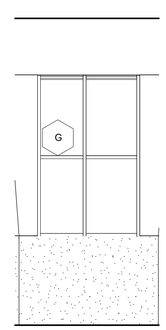

12 CONTROL EXT SW
1/4" = 1'-0"

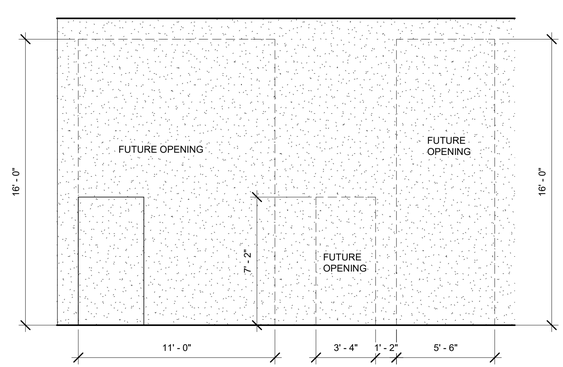

13 CORR 108 W
1/4" = 1'-0"

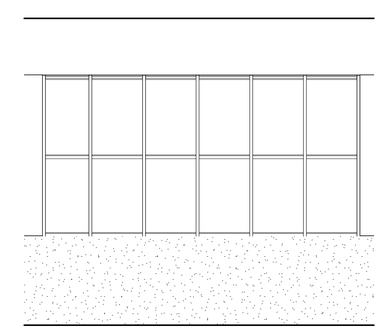

14 CONTROL EXT W
1/4" = 1'-0"

LICENSED
ARCHITECT
AR-986981

KYNDELL M. MADSEN
STATE OF IDAHO
2/24/25

DATE

PHASE 1 PART B FOR:
TWIN FALLS COUNTY - WRIGHT AVE JAIL
2515 Wright Ave, Twin Falls, ID 83301
INTERIOR ELEVATIONS

Laughlin Ricks Architecture
architecture/planning
134 3RD Ave East * Twin Falls, Idaho 83301
(208) 736-8050

DATE: 2/24/25
KM Drawn
RCR Checked
#23029 PROJECT #

A1B-8.0

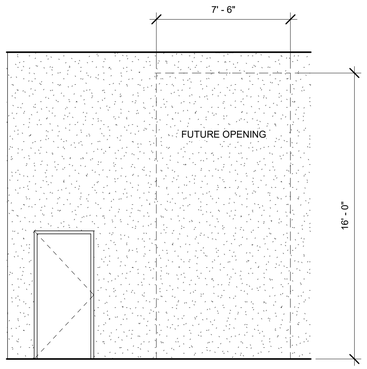

15 CORR 108 NW
1/4" = 1'-0"

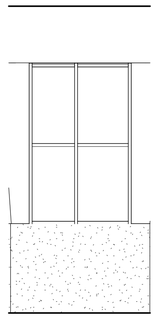

16 CONTROL EXT NW
1/4" = 1'-0"

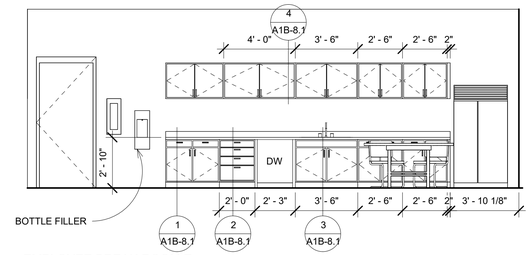

17 EMPLOYEE BREAK ROOM E
1/4" = 1'-0"

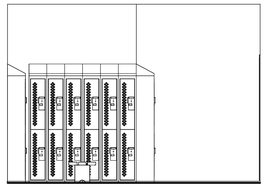

18 LOCKER N
1/4" = 1'-0"

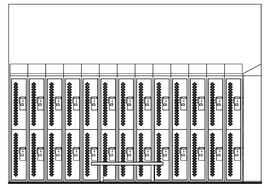

19 LOCKER S
1/4" = 1'-0"

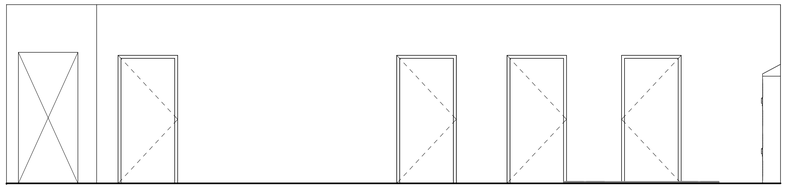

20 LOCKER E
1/4" = 1'-0"

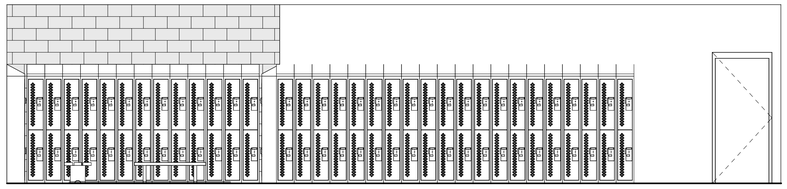

21 LOCKER WEST
1/4" = 1'-0"

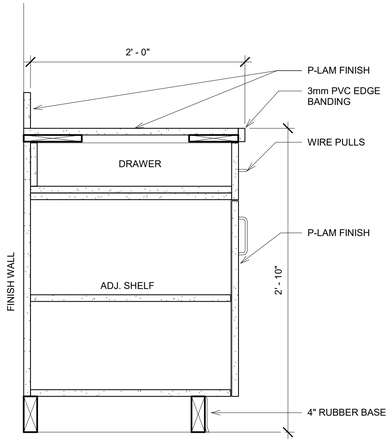

1 BASE CABINET SHELVES DETAIL
1 1/2" = 1'-0"

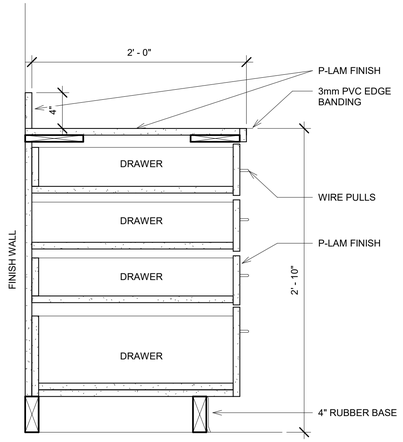

2 BASE CABINET 4 DRAWER
1 1/2" = 1'-0"

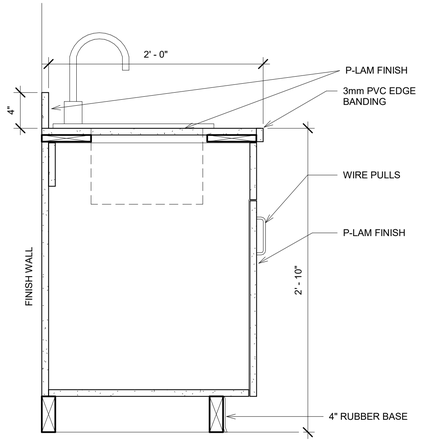

3 BASE CABINET SINK DETAIL
1 1/2" = 1'-0"

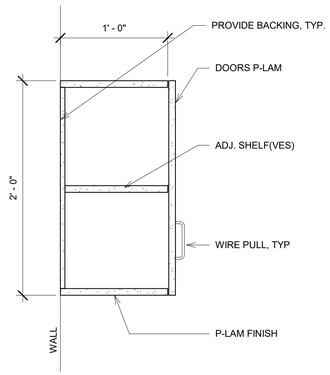

4 UPPER CASEWORK DETAIL
1 1/2" = 1'-0"

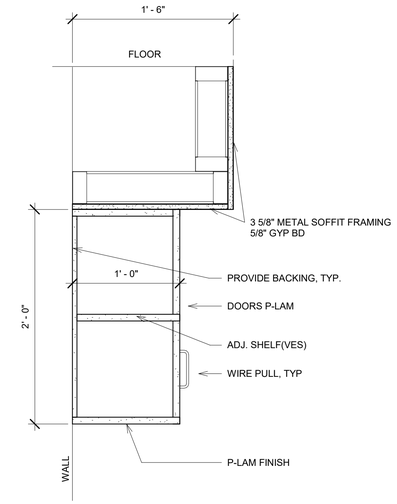

5 UPPER CASEWORK DETAIL CONTROL
1 1/2" = 1'-0"

LICENSED
ARCHITECT
AR-986981
KYNDELL M. MADSEN
STATE OF IDAHO
2/24/25

DATE

PHASE 1 PART B FOR:
TWIN FALLS COUNTY - WRIGHT AVE JAIL
2515 Wright Ave, Twin Falls, ID 83301
INTERIOR ELEVATIONS

Laughlin Ricks Architecture
architecture/planning
134 3RD Ave East * Twin Falls, Idaho 83301
(208) 736-8050

DATE: 2/24/25
KM Drawn
RCR Checked
#23029 PROJECT #

A1B-8.1

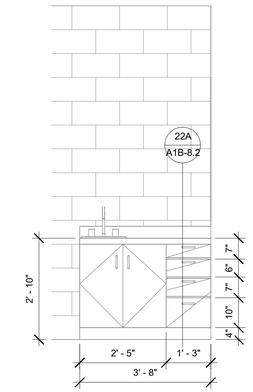

22 ADA EXAM CASEWORK
1/2" = 1'-0"

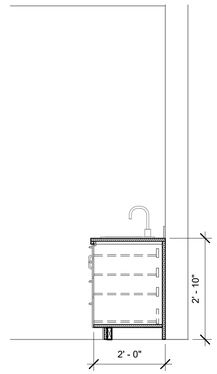

22A ADA EXAM CASEWORK DETAIL
1/2" = 1'-0"

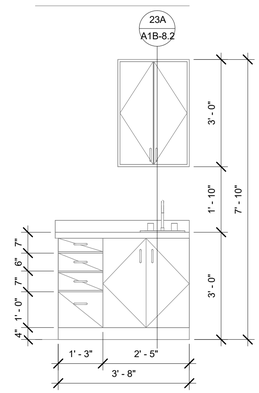

23 EXAM CASEWORK
1/2" = 1'-0"

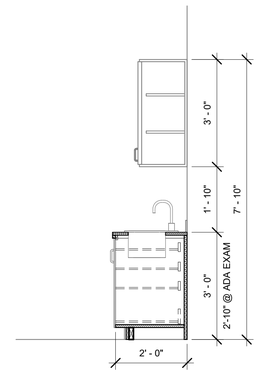

23A EXAM CASEWORK DETAIL
1/2" = 1'-0"

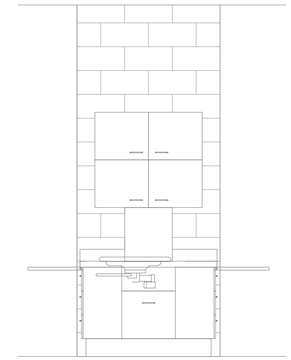

24 DENTAL CASEWORK (FRONT)
1/2" = 1'-0"

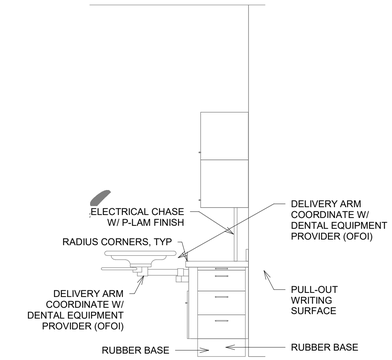

25 DENTAL CASEWORK (SIDE)
1/2" = 1'-0"

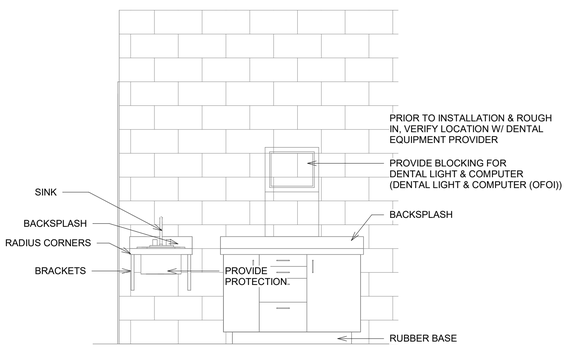

26 DENTAL CASEWORK 2 (FRONT)
1/2" = 1'-0"

27 DENTAL CASEWORK 2 (SIDE)
1/2" = 1'-0"

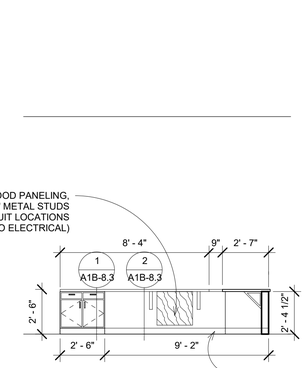

29 CONTROL CASEWORK A
1/4" = 1'-0"

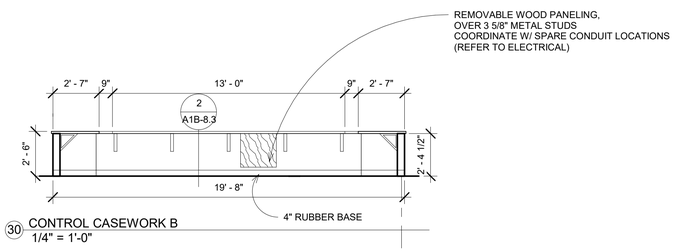

30 CONTROL CASEWORK B
1/4" = 1'-0"

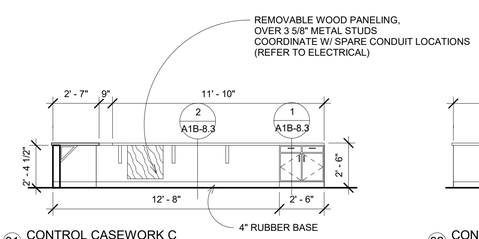

31 CONTROL CASEWORK C
1/4" = 1'-0"

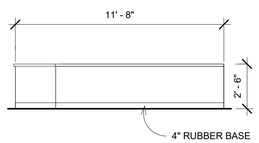

32 CONTROL CASEWORK D
1/4" = 1'-0"

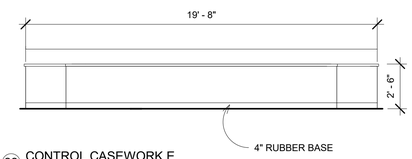

33 CONTROL CASEWORK E
1/4" = 1'-0"

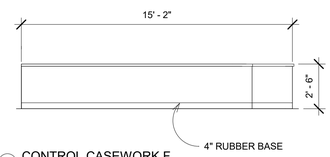

34 CONTROL CASEWORK F
1/4" = 1'-0"

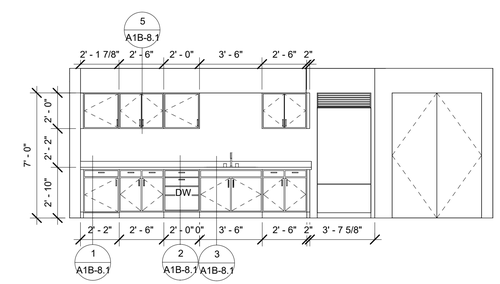

35 CONTROL KITCHENETTE CASEWORK
1/4" = 1'-0"

LICENSED
ARCHITECT
AR-986981
KYNDELL M. MADSEN
STATE OF IDAHO
2/24/25

DATE

PHASE 1 PART B FOR:
TWIN FALLS COUNTY - WRIGHT AVE JAIL
2515 Wright Ave, Twin Falls, ID 83301
INTERIOR ELEVATIONS

Laughlin Ricks Architecture
architecture/planning
134 3RD Ave East, * Twin Falls, Idaho 83301
(208) 736-8050

DATE: 2/24/25
KM Drawn
RCR Checked
#23029
PROJECT #

A1B-8.2

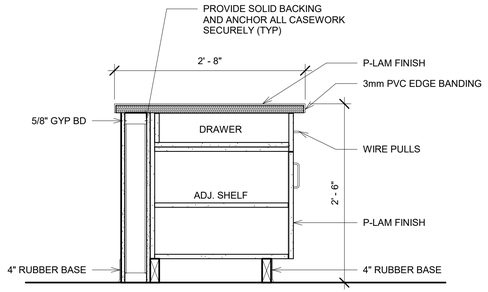

1 CONTROL CASEWORK DETAIL W/ SHELVES
1" = 1'-0"

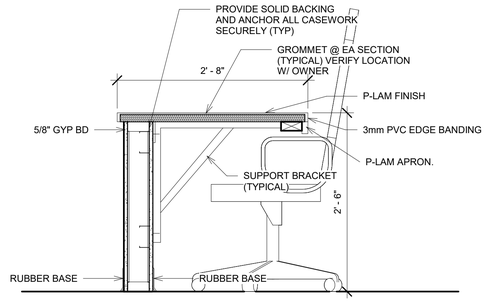

2 CONTROL CASEWORK DETAIL
1" = 1'-0"

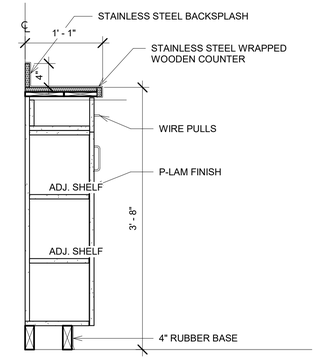

3 BOOKING CASEWORK DETAIL W/ SHELVES
1" = 1'-0"

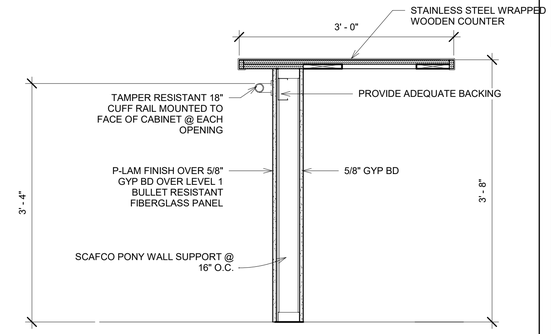

4 BOOKING CASEWORK DETAIL
1" = 1'-0"

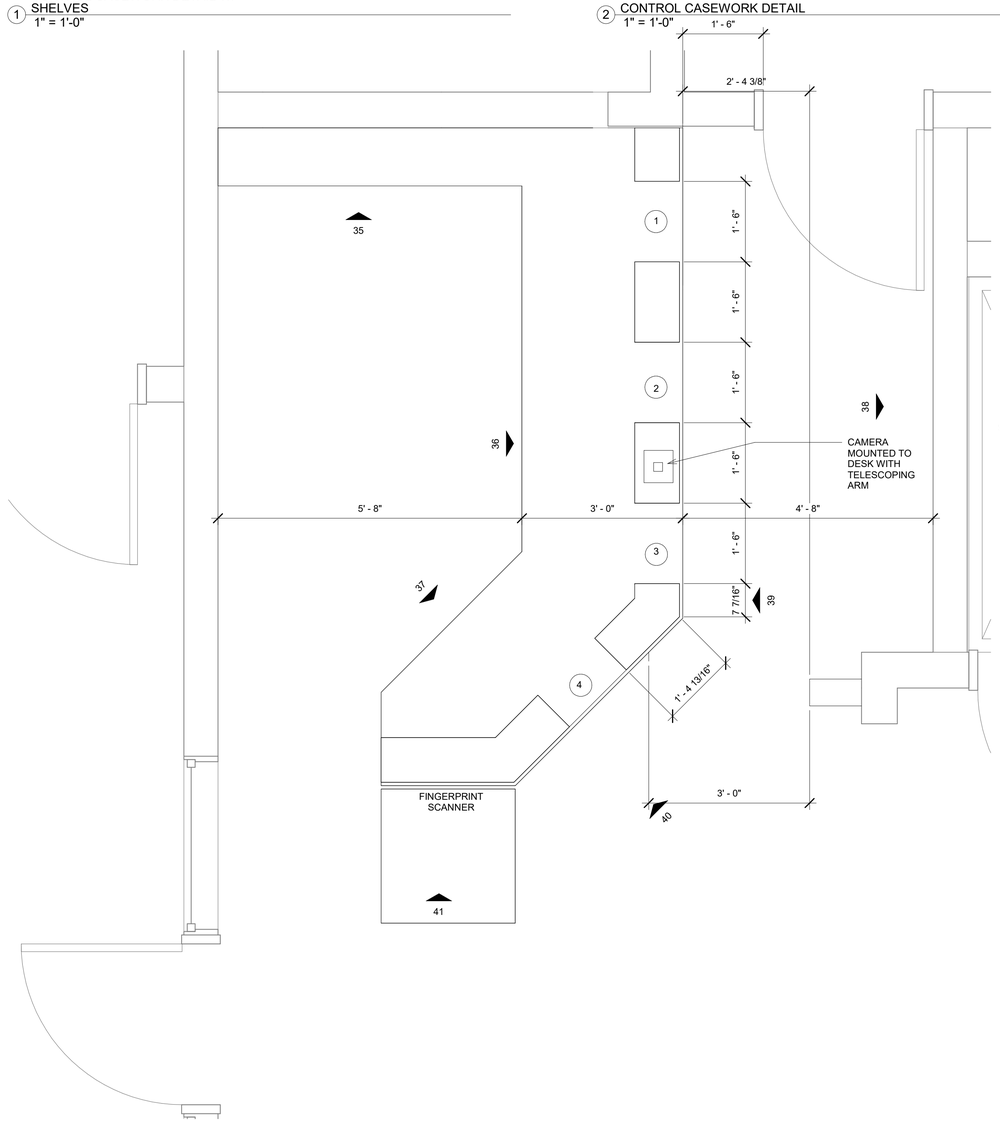

X ENLARGED BOOKING DESK PLAN
3/4" = 1'-0"

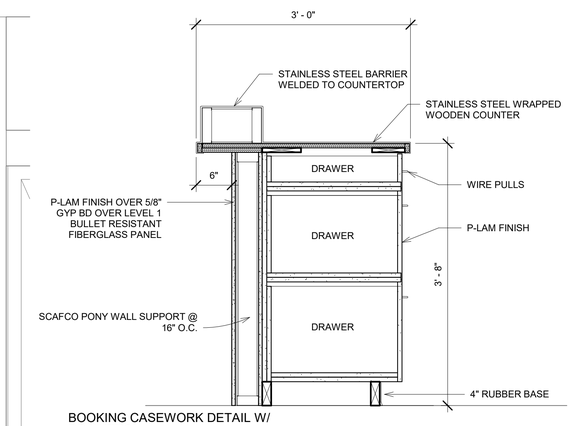

5 BOOKING CASEWORK DETAIL W/ DRAWERS
1" = 1'-0"

NOTE:
1. THERE SHALL BE NO SHARP CORNERS OR EDGES OF THE STAINLESS STEEL COUNTERTOP OF THE BOOKING DESK. ALL EDGES AND CORNERS SHALL BE ROUNDED
2. THE BOOKING DESK LAMINATE COLOR SHALL BE WILSONART, NORTH SEA, D90-60, MATTE FINISH

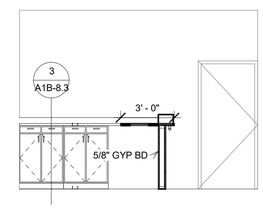

35 BOOKING A
1/4" = 1'-0"

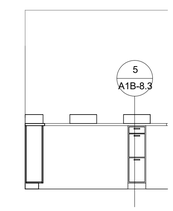

36 BOOKING B
1/4" = 1'-0"

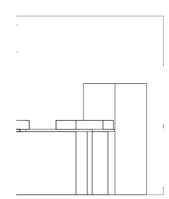

37 BOOKING C
1/4" = 1'-0"

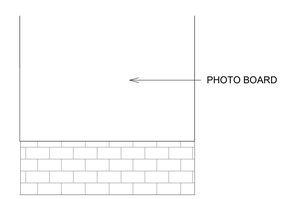

38 BOOKING D
1/4" = 1'-0"

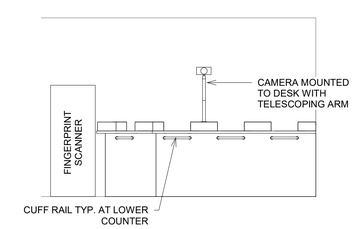

39 BOOKING E
1/4" = 1'-0"

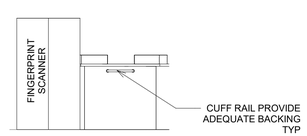

40 BOOKING F
1/4" = 1'-0"

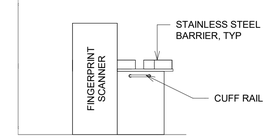

41 BOOKING G
1/4" = 1'-0"

LICENSED ARCHITECT AR-986981
KYNDELL M. MADSEN STATE OF IDAHO
2/24/25

DATE

PHASE 1 PART B FOR:
TWIN FALLS COUNTY - WRIGHT AVE JAIL
2515 Wright Ave, Twin Falls, ID 83301
INTERIOR ELEVATIONS

Laughlin Ricks Architecture
architecture/planning
134 3RD Ave East, * Twin Falls, Idaho 83301
(208) 736-8050

DATE: 2/24/25
KM Drawn
RCR Checked
#23029 PROJECT #

A1B-8.3

PH 1 PART B - Room Finish Schedule

Number	Name	Base Finish	Floor Finish	Wall Materials North	Wall Materials East	Wall Materials South	Wall Materials West	Wall Finishes North	Wall Finishes East	Wall Finishes South	Wall Finishes West	Ceiling Material	Ceiling Finish	Remarks
100	CORR. 100	-	BURNISHED CONC	CMU / CONC PRE-CAST PANEL	CMU	CMU / INSULATED CONC PRE-CAST PANEL	CMU	SEALED / FF	SEALED	SEALED / FF	SEALED	2X2 SECURITY CEILING	FF	
101	ELECT.	-	BURNISHED CONC	INSULATED CONC PRE-CAST PANEL	CMU	CMU	CMU	FF	SEALED	SEALED	SEALED	OPEN TO STRUCTURE	FF	
102	JAN.	-	BURNISHED CONC	CMU	CMU	INSULATED CONC PRE-CAST PANEL	CMU	SEALED	SEALED	FF	SEALED	OPEN TO STRUCTURE	FF	
103	KITCHEN	6" RESINOUS COVE BASE	RESINOUS FLOORING	GYP + CEMENT BOARD	CMU	CMU	CMU	FRP / EPOXY PT	EPOXY PT	EPOXY PT	EPOXY PT	SECURITY GYP BD CEILING	EPOXY PT	FRP TO 8'-0", ALL INTERIOR WALLS THAT ARE NOT COOLER/FREEZERS OR CMU SHALL BE PER DETAILS ON A-10-9
103A	RR	6" RESINOUS COVE BASE	RESINOUS FLOORING	GYP + CEMENT BOARD	CMU	GYP + CEMENT BOARD	GYP + CEMENT BD	EPOXY PT	EPOXY PT	EPOXY PT	EPOXY PT	SECURITY GYP BD CEILING	EPOXY PT	
103B	OFFICE	6" RESINOUS COVE BASE	BURNISHED CONC	GYP + CEMENT BOARD	GYP + CEMENT BOARD	GYP + CEMENT BOARD	GYP + CEMENT BD	EPOXY PT	EPOXY PT	EPOXY PT	EPOXY PT	SECURITY GYP BD CEILING	EPOXY PT	
103C	PANTRY	4" RUBBER BASE	RESINOUS FLOORING	GYP + CEMENT BOARD	GYP + CEMENT BOARD	GYP + CEMENT BOARD	GYP + CEMENT BD	EPOXY PT	EPOXY PT	EPOXY PT	EPOXY PT	SECURITY GYP BD CEILING	EPOXY PT	
103D	FREEZER	PER MANUF	SEALED CONC	PER MANUF	PER MANUF	PER MANUF	PER MANUF	PER MANUF	PER MANUF	PER MANUF	PER MANUF	PER MANUF	PER MANUF	AT VERTICAL GAPS BETWEEN COOLER AND WALL PROVIDE STAINLESS STEEL TRIM SECURED WITH TAMPER RESISTANT SCREWS, AT EXTERIOR WALLS OF COOLER PROVIDE DIAMOND PLATE TO 3' HIGH SECURED WITH GLUE AND TAMPER RESISTANT SCREWS
103E	COOLER	PER MANUF	SEALED CONC	PER MANUF	PER MANUF	PER MANUF	PER MANUF	PER MANUF	PER MANUF	PER MANUF	PER MANUF	PER MANUF	PER MANUF	AT VERTICAL GAPS BETWEEN COOLER AND WALL PROVIDE STAINLESS STEEL TRIM SECURED WITH TAMPER RESISTANT SCREWS, AT EXTERIOR WALLS OF COOLER PROVIDE DIAMOND PLATE TO 3' HIGH SECURED WITH GLUE AND TAMPER RESISTANT SCREWS
104	DELIVERY	-	BURNISHED CONC	CMU	CMU	CMU	CMU	SEALED	SEALED	SEALED	SEALED	SECURITY GYP BD CEILING	PT	
105	CORR. 105	-	BURNISHED CONC	CONC PRE-CAST PANEL	CMU	CMU	CMU	FF	SEALED	SEALED	SEALED	2X4 ACT	FF	
106	EMPLOYEE BREAK RM	4" RUBBER BASE	BURNISHED CONC	CONC PRE-CAST PANEL	GYP BD	GYP BD	CMU	FF	PT	PT	SEALED	2X4 ACT	FF	
107	LOCKERS	4" RUBBER BASE	BURNISHED CONC	CONC PRE-CAST PANEL	GYP BD	GYP BD	GYP BD / CMU	FF	PT	PT	PT / SEALED	2X4 ACT	FF	
107A	JANITOR	4" RUBBER BASE	BURNISHED CONC	TBB	TBB	TBB	TBB	EPOXY PT	EPOXY PT	EPOXY PT	EPOXY PT	GYP BD	EPOXY PT	
107B	RR	4" RUBBER BASE	BURNISHED CONC	TBB	TBB	TBB	TBB	EPOXY PT	EPOXY PT	EPOXY PT	EPOXY PT	GYP BD	EPOXY PT	
107C	RR	4" RUBBER BASE	BURNISHED CONC	TBB	TBB	TBB	TBB	EPOXY PT	EPOXY PT	EPOXY PT	EPOXY PT	GYP BD	EPOXY PT	
107D	RR	4" RUBBER BASE	BURNISHED CONC	TBB	TBB / CEMENT BD	TBB / CEMENT BD	TBB / CEMENT BD	EPOXY PT	EPOXY PT	EPOXY PT	EPOXY PT	GYP BD	EPOXY PT	PROVIDE CEMENT BD BEHIND SHOWER
108	CORR. 108	-	BURNISHED CONC	PRE-CAST CONC PANELS / INSULATED PANELS / CMU	CONC PRE-CAST PANEL / CMU	PRE-CAST CONC PANELS / INSULATED PANELS / CMU	PRE-CAST CONC PANELS / INSULATED PANELS / CMU	FF	FF / SEALED	FF	FF	2X2 SECURITY CEILING	FF	
109	CONTROL	-	BURNISHED CONC	GYP BD	GYP BD	GYP BD	GYP BD	PT	PT	PT	PT	2X4 ACT	FF	
109A	RR	-	BURNISHED CONC	CONC	CONC	TBB	TBB	FF	FF	EPOXY PT	EPOXY PT	OPEN TO STRUCTURE	-	
109B	IT	-	BURNISHED CONC	CONC	GYP BD	GYP BD	CONC	FF	PT	PT	FF	OPEN TO STRUCTURE	-	
109C	Room		BURNISHED CONC	GYP BD	CONC	GYP BD	CONC	PT	FF	PT	FF	OPEN TO STRUCTURE	-	
110	CORR. 110	-	BURNISHED CONC	CMU / CONC PRE-CAST PANEL	CMU	INSULATED CONC PRE-CAST PANEL	CMU / CONC PRE-CAST PANEL	SEALED / FF	SEALED	FF	SEALED / FF	2X2 SECURITY CEILING	FF	
111	STAIR	-	BURNISHED CONC	CMU	CMU	INSULATED CONC PRE-CAST PANEL	CONC PRE-CAST PANEL	SEALED	SEALED	FF	FF	-	-	
112	CORR. 112	-	BURNISHED CONC	CONC PRE-CAST PANEL / CMU	INSULATED CONC PRE-CAST PANEL / CONC PRE-CAST PANEL	INSULATED CONC PRE-CAST PANEL	CMU	FF / SEALED	FF	FF	SEALED	2X2 SECURITY CEILING	FF	
113	PROGRAM	-	BURNISHED CONC	CONC PRE-CAST PANEL	CMU	CMU	INSULATED CONC PRE-CAST PANEL	FF	SEALED	SEALED	FF	2X2 SECURITY CEILING	FF	
114	STORAGE / FUTURE CORR.	-	BURNISHED CONC	CMU	CMU	CMU	INSULATED CONC PRE-CAST PANEL	SEALED	SEALED	SEALED	FF	2X2 SECURITY CEILING	FF	
115	PROGRAM	-	BURNISHED CONC	CMU	CMU	INSULATED CONC PRE-CAST PANEL	INSULATED CONC PRE-CAST PANEL	SEALED	SEALED	FF	FF	2X2 SECURITY CEILING	FF	
116	STAIR	-	BURNISHED CONC	INSULATED CONC PRE-CAST PANEL	CMU	CMU	CMU	FF	SEALED	SEALED	SEALED	-	-	
117	DAY ROOM	-	BURNISHED CONC	CMU	CMU	CMU	CMU / CONC PRE-CAST PANEL	SEALED	SEALED	SEALED	SEALED / FF	OPEN TO STRUCTURE, CONC LID	EPOXY PT CONC LID OVER SHOWERS	
118	CELL	-	BURNISHED CONC	CMU	CMU	CONC PRE-CAST PANEL	CMU	SEALED	SEALED	FF	SEALED	OPEN TO STRUCTURE	-	
119	CELL	-	BURNISHED CONC	CMU	CMU	CONC PRE-CAST PANEL	CMU	SEALED	SEALED	FF	SEALED	OPEN TO STRUCTURE	-	
120	CELL	-	BURNISHED CONC	CMU	CMU	CONC PRE-CAST PANEL	CMU	SEALED	SEALED	FF	SEALED	OPEN TO STRUCTURE	-	
121	CELL	-	BURNISHED CONC	CMU	CMU	CONC PRE-CAST PANEL	CMU	SEALED	SEALED	FF	SEALED	OPEN TO STRUCTURE	-	
122	CELL	-	BURNISHED CONC	CMU	CMU	CONC PRE-CAST PANEL	CMU	SEALED	SEALED	FF	SEALED	OPEN TO STRUCTURE	-	
123	CELL	-	BURNISHED CONC	CMU	CMU	CONC PRE-CAST PANEL	CMU	SEALED	SEALED	FF	SEALED	OPEN TO STRUCTURE	-	
124	CELL	-	BURNISHED CONC	CMU	CMU	CONC PRE-CAST PANEL	CMU	SEALED	SEALED	FF	SEALED	OPEN TO STRUCTURE	-	
125	CELL	-	BURNISHED CONC	CMU	CMU	CONC PRE-CAST PANEL	CMU	SEALED	SEALED	FF	SEALED	OPEN TO STRUCTURE	-	
126	CELL	-	BURNISHED CONC	CMU	CMU	CONC PRE-CAST PANEL	CMU	SEALED	SEALED	FF	SEALED	OPEN TO STRUCTURE	-	
127	CELL	-	BURNISHED CONC	CMU	CMU	CONC PRE-CAST PANEL	CMU	SEALED	SEALED	FF	SEALED	OPEN TO STRUCTURE	-	
128	ADA CELL	-	BURNISHED CONC	CMU	INSULATED CONC PRE-CAST PANEL / CMU	CONC PRE-CAST PANEL / CMU	CMU	SEALED	FF	FF / SEALED	SEALED	OPEN TO STRUCTURE	-	
129	CELL	-	BURNISHED CONC	CMU	INSULATED CONC PRE-CAST PANEL	CMU	CMU	SEALED	FF	SEALED	SEALED	OPEN TO STRUCTURE	-	
130	CELL	-	BURNISHED CONC	CMU	INSULATED CONC PRE-CAST PANEL	CMU	CMU	SEALED	FF	SEALED	SEALED	OPEN TO STRUCTURE	-	
131	CELL	-	BURNISHED CONC	CMU	INSULATED CONC PRE-CAST PANEL	CMU	CMU	SEALED	FF	SEALED	SEALED	OPEN TO STRUCTURE	-	
132	CELL	-	BURNISHED CONC	CMU	INSULATED CONC PRE-CAST PANEL	CMU	CMU	SEALED	FF	SEALED	SEALED	OPEN TO STRUCTURE	-	
133	CORR. 133	-	BURNISHED CONC	CMU	INSULATED CONC PRE-CAST PANEL	CMU	CMU	SEALED	FF	SEALED	SEALED	OPEN TO STRUCTURE	-	
134	MECH / ELECT	-	BURNISHED CONC	CONC PRE-CAST PANEL / CMU	INSULATED CONC PRE-CAST PANEL / CMU	CMU	CMU / CONC PRE-CAST PANEL	FF / SEALED	FF	SEALED	SEALED / FF	OPEN TO STRUCTURE	-	
135	DORM	-	BURNISHED CONC	INSULATED CONC PRE-CAST PANEL	INSULATED CONC PRE-CAST PANEL / CMU	CONC PRE-CAST PANEL	CMU / CONC PRE-CAST PANEL	FF	FF	FF	SEALED / FF	OPEN TO STRUCTURE, CONC LID	EPOXY PT CONC LID OVER SHOWERS	
136	INDOOR REC	-	BURNISHED CONC	INSULATED CONC PRE-CAST PANEL	CMU	CONC PRE-CAST PANEL	INSULATED CONC PRE-CAST PANEL	FF	SEALED	FF	FF	OPEN TO STRUCTURE	-	
137	OUTDOOR REC	-	BURNISHED CONC	CMU	CMU	INSULATED CONC PRE-CAST PANEL	CMU	SEALED	SEALED	FF	INSULATED	METAL SECURITY MESH	PT	
210	PROGRAM	-	BURNISHED CONC	CMU / CONC PRE-CAST PANEL	CMU	INSULATED CONC PRE-CAST PANEL	CMU / CONC PRE-CAST PANEL	SEALED / FF	SEALED	FF	SEALED / FF	OPEN TO STRUCTURE	-	
211	STAIR	-	BURNISHED CONC	CMU	CMU	INSULATED CONC PRE-CAST PANEL	CONC PRE-CAST PANEL	SEALED	SEALED	FF	FF	2X2 SECURITY CEILING	FF	
212	CORR. 212	-	BURNISHED CONC	CMU / CONC PRE-CAST PANEL	INSULATED CONC PRE-CAST PANEL / CONC PRE-CAST PANEL	INSULATED CONC PRE-CAST PANEL	CMU / INSULATED CONC PRE-CAST PANEL	SEALED / FF	FF	FF	SEALED / FF	2X2 SECURITY CEILING	FF	
212A	MECH CHASE / STORAGE		BURNISHED CONC	CMU	CMU	CMU	INSULATED CONC PRE-CAST PANEL	SEALED	SEALED	SEALED	FF	OPEN TO STRUCTURE	-	
213	PROGRAM	-	BURNISHED CONC	CONC PRE-CAST PANEL	CMU	CMU	INSULATED CONC PRE-CAST PANEL	FF	SEALED	SEALED	FF	2X2 SECURITY CEILING	FF	
215	PROGRAM	-	BURNISHED CONC	CMU	CMU	CMU	INSULATED CONC PRE-CAST PANEL	SEALED	SEALED	SEALED	FF	2X2 SECURITY CEILING	FF	
216	STAIR	-	BURNISHED CONC	INSULATED CONC PRE-CAST PANEL	CMU	CMU	CMU	FF	SEALED	SEALED	SEALED	SECURITY GYP BD CEILING	PT	
218	CELL	-	BURNISHED CONC	CMU	CMU	CONC PRE-CAST PANEL	CMU	SEALED	SEALED	FF	SEALED	OPEN TO STRUCTURE	-	
219	CELL	-	BURNISHED CONC	CMU	CMU	CONC PRE-CAST PANEL	CMU	SEALED	SEALED	FF	SEALED	OPEN TO STRUCTURE	-	
220	CELL	-	BURNISHED CONC	CMU	CMU	CONC PRE-CAST PANEL	CMU	SEALED	SEALED	FF	SEALED	OPEN TO STRUCTURE	-	
221	CELL	-	BURNISHED CONC	CMU	CMU	CONC PRE-CAST PANEL	CMU	SEALED	SEALED	FF	SEALED	OPEN TO STRUCTURE	-	
222	CELL	-	BURNISHED CONC	CMU	CMU	CONC PRE-CAST PANEL	CMU	SEALED	SEALED	FF	SEALED	OPEN TO STRUCTURE	-	
223	CELL	-	BURNISHED CONC	CMU	CMU	CONC PRE-CAST PANEL	CMU	SEALED	SEALED	FF	SEALED	OPEN TO STRUCTURE	-	
224	CELL	-	BURNISHED CONC	CMU	CMU	CONC PRE-CAST PANEL	CMU	SEALED	SEALED	FF	SEALED	OPEN TO STRUCTURE	-	
225	CELL	-	BURNISHED CONC	CMU	CMU	CONC PRE-CAST PANEL	CMU	SEALED	SEALED	FF	SEALED	OPEN TO STRUCTURE	-	
226	CELL	-	BURNISHED CONC	CMU	CMU	CONC PRE-CAST PANEL	CMU	SEALED	SEALED	FF	SEALED	OPEN TO STRUCTURE	-	
227	CELL	-	BURNISHED CONC	CMU	CMU	CONC PRE-CAST PANEL	CMU	SEALED	SEALED	FF	SEALED	OPEN TO STRUCTURE	-	
228	CELL	-	BURNISHED CONC	CMU	INSULATED CONC PRE-CAST PANEL / CMU	CONC PRE-CAST PANEL / CMU	CMU	SEALED	FF	FF / SEALED	SEALED	OPEN TO STRUCTURE	-	
229	CELL	-	BURNISHED CONC	CMU	INSULATED CONC PRE-CAST PANEL	CMU	CMU	SEALED	FF	SEALED	SEALED	OPEN TO STRUCTURE	-	
230	CELL	-	BURNISHED CONC	CMU	INSULATED CONC PRE-CAST PANEL	CMU	CMU	SEALED	FF	SEALED	SEALED	OPEN TO STRUCTURE	-	
231	CELL	-	BURNISHED CONC	CMU	INSULATED CONC PRE-CAST PANEL	CMU	CMU	SEALED	FF	SEALED	SEALED	OPEN TO STRUCTURE	-	
232	CELL	-	BURNISHED CONC	CMU	INSULATED CONC PRE-CAST PANEL	CMU	CMU	SEALED	FF	SEALED	SEALED	OPEN TO STRUCTURE	-	
233	CORR. 233	-	BURNISHED CONC	CONC PRE-CAST PANEL	CMU	CMU	CMU	FF	SEALED	SEALED	SEALED	OPEN TO STRUCTURE	-	
235	DORM	-	BURNISHED CONC	INSULATED CONC PRE-CAST PANEL	INSULATED CONC PRE-CAST PANEL	CONC PRE-CAST PANEL	-	FF	FF	FF	-	2X2 SECURITY CEILING	FF	

NOTE: FOR BURNISHED CONCRETE FLOOR REFER TO CONCRETE CURE AND FINISHING SYSTEM SPECIFICATION

LICENSED ARCHITECT AR-986981

KYNDELL M. MADSEN STATE OF IDAHO

2/24/25

DATE

PHASE 1 PART B FOR:

TWIN FALLS COUNTY - WRIGHT AVE JAIL

2515 Wright Ave, Twin Falls, ID 83301

PH 1 PART B - FINISH SCHEDULE

Laughlin Ricks Architecture

architecture/planning

134 3RD Ave East, * Twin Falls, Idaho 83301

(208) 736-8050

DATE: 2/24/25

KM — Drawn

RCR — Checked

#23029 — PROJECT #

A1B-9.0

PH 1 PART B - Door Schedule

DOOR	ROOM	Phase Created	EL	Level	DOOR Width	DOOR Height	DOOR Thickness	DOOR SECURITY GRADE	DOOR Material	DOOR Finish	Accessories	Door Latch	FRAME Material	FRAME Finish	FRAME SIZE	FRAME SECURITY GRADE	UL RATING	Access Control	Comments
100	CORR. 100	Phase 1 PART B	b	Level 1	3' - 0"	7' - 0"	2"	2	HM	PT	HW GROUP 4	AIRTEQ 9500, ASSA CYLINDER	HM	PT	7 3/4"	2	3 HR	Yes	
101	ELECT.	Phase 1 PART B	o	Level 1	4' - 0"	7' - 0"	2"	3	HM	PT	HW GROUP 3	AIRTEQ 9500, ASSA CYLINDER	HM	PT	7 3/4"	2			
102	ELECT.	Phase 1 PART B	b	Level 1	3' - 0"	7' - 0"	2"	2	HM	PT	HW GROUP 4	AIRTEQ 9500, ASSA CYLINDER	HM	PT	7 3/4"	2	3/4 HR	Yes	
103	JAN.	Phase 1 PART B	b	Level 1	3' - 0"	7' - 0"	2"	2	HM	PT	HW GROUP 4	AIRTEQ 9500, ASSA CYLINDER	HM	PT	7 3/4"	2	3/4 HR	Yes	
104	KITCHEN	Phase 1 PART B	b	Level 1	3' - 0"	7' - 0"	2"	2	HM	PT	HW GROUP 4A	AIRTEQ 9500, ASSA CYLINDER	HM	PT	7 3/4"	2	3/4 HR	Yes	
104A	KITCHEN	Phase 1 PART B	d	Level 1	3' - 0"	7' - 0"	2"	2	HM	PT	HW GROUP 05A	ENTRACNCE OFFICE LOCK	HM	PT	5 3/4"	2			
104B	KITCHEN	Phase 1 PART B	l	Level 1	3' - 0"	7' - 0"	2"	2	HM	PT	HW GROUP 7	AIRTEQ 9500, ASSA CYLINDER	HM	PT	5 3/4"	2			
104C	KITCHEN	Phase 1 PART B	l	Level 1	3' - 0"	7' - 0"	2"	2	HM	PT	HW GROUP 7	AIRTEQ 9500, ASSA CYLINDER	HM	PT	5 3/4"	2			
105	KITCHEN	Phase 1 PART B	b	Level 1	3' - 0"	7' - 0"	2"	2	HM	PT	HW GROUP 4A	AIRTEQ 9500, ASSA CYLINDER	HM	PT	7 3/4"	2	3/4 HR	Yes	
106	DELIVERY	Phase 1 PART B	i	Level 1	6' - 0"	7' - 0"	2"	2	HM	PT	HW GROUP 6	STOREROOM	HM	PT	7 3/4"	2			
107	DELIVERY	Phase 1 PART B	d	Level 1	3' - 0"	7' - 0"	2"	2	HM	PT	HW GROUP 3	AIRTEQ 9500, ASSA CYLINDER	HM	PT	7 3/4"	2		Yes	
108	DELIVERY	Phase 1 PART B	--	Level 1	10' - 0"	9' - 4"	3"		HM	PT	HW GROUP R1	PER MANUFACTURER	HM	PT					DOOR MUST HAVE A DPS AND BE CONTROLLED BY CONTROL
109	CORR. 100	Phase 1 PART B	b	Level 1	3' - 0"	7' - 0"	2"	2	HM	PT	HW GROUP 4	AIRTEQ 9500, ASSA CYLINDER	HM	PT	7 3/4"	2	3/4 HR	Yes	
110	EMPLOYEE BREAK RM	Phase 1 PART B	b	Level 1	3' - 0"	7' - 0"	2"	2	HM	PT	HW GROUP 4	AIRTEQ 9500, ASSA CYLINDER	HM	PT	7 3/4"	2	3/4 HR	Yes	
111	LOCKERS	Phase 1 PART B	l	Level 1	3' - 0"	7' - 0"	2"	3	HM	PT	HW GROUP 10	PASSAGE	HM	PT	5 5/8"	3		No	
112	LOCKERS	Phase 1 PART B	d	Level 1	3' - 0"	7' - 0"	2"	2	HM	PT	HW GROUP 3	AIRTEQ 9500, ASSA CYLINDER	HM	PT	7 3/4"	2		Yes	
113	JANITOR	Phase 1 PART B	k	Level 1	3' - 0"	7' - 0"	2"	3	HM	PT	HW GROUP 7	STOREROOM	HM	PT	5 5/8"	3			
114	RR	Phase 1 PART B	k	Level 1	3' - 0"	7' - 0"	2"	3	HM	PT	HW GROUP 5	PRIVACY	HM	PT	5 5/8"	3			PRIVACY HAS OUTSIDE INDICATOR
115	RR	Phase 1 PART B	k	Level 1	3' - 0"	7' - 0"	2"	3	HM	PT	HW GROUP 5	PRIVACY	HM	PT	5 5/8"	3			PRIVACY HAS OUTSIDE INDICATOR
116	RR	Phase 1 PART B	k	Level 1	3' - 0"	7' - 0"	2"	3	HM	PT	HW GROUP 5	PRIVACY	HM	PT	5 5/8"	3			PRIVACY HAS OUTSIDE INDICATOR
117	CORR. 108	Phase 1 PART B	j	Level 1	4' - 0"	7' - 0"	2"	2	HM	PT	HW GROUP 4	AIRTEQ 9500, ASSA CYLINDER	HM	PT	7 3/4"	2	3/4 HR	Yes	
118	CONTROL	Phase 1 PART B	k	Level 1	3' - 0"	7' - 0"	2"	2	HM	PT	HW GROUP 4	AIRTEQ 9500, ASSA CYLINDER	HM	PT	7 3/4"	3	3/4 HR	Yes	REFLECTIVE FILM ON GLASS
118A	RR	Phase 1 PART B	k	C.R. DOWN	3' - 0"	7' - 0"	2"	3	HM	PT	HW GROUP 5	PRIVACY	HM	PT	5 5/8"				PRIVACY HAS OUTSIDE INDICATOR
118B	IT	Phase 1 PART B	k	C.R. DOWN	3' - 0"	7' - 0"	2"	2	HM	PT	HW GROUP 7	STOREROOM	HM	PT	5 5/8"	2			
118C	Room	Phase 1 PART B	m	C.R. DOWN	5' - 0"	7' - 0"	2"	3	HM	PT	HW GROUP 6A	PASSAGE	HM	PT		3			
119	CORR. 108	Phase 1 PART B	n	Level 1	3' - 0"	7' - 0"	2"	2	HM	PT	HW GROUP 4	AIRTEQ 9500, ASSA CYLINDER	HM	PT	7 3/4"	2	3/4 HR	Yes	
120	CORR. 110	Phase 1 PART B	d	Level 1	3' - 0"	7' - 0"	2"	2	HM	PT	HW GROUP 3	AIRTEQ 9500, ASSA CYLINDER	HM	PT	7 3/4"	2		Yes	
121	STAIR	Phase 1 PART B	b	Level 1	3' - 0"	7' - 0"	2"	2	HM	PT	HW GROUP 4	AIRTEQ 9500, ASSA CYLINDER	HM	PT	7 3/4"	2	1 HR	Yes	
122	STAIR	Phase 1 PART B	b	Level 1	3' - 0"	7' - 0"	2"	2	HM	PT	HW GROUP 4	AIRTEQ 9500, ASSA CYLINDER	HM	PT	7 3/4"	2	1 HR	Yes	
123	CORR. 108	Phase 1 PART B	n	Level 1	3' - 0"	7' - 0"	2"	2	HM	PT	HW GROUP 4	AIRTEQ 9500, ASSA CYLINDER	HM	PT	7 3/4"	2	3/4 HR	Yes	
124	PROGRAM	Phase 1 PART B	b	Level 1	3' - 0"	7' - 0"	2"	2	HM	PT	HW GROUP 4	AIRTEQ 9500, ASSA CYLINDER	HM	PT	7 3/4"	2	3/4 HR	Yes	
125	STORAGE / FUTURE CORR.	Phase 1 PART B	b	Level 1	3' - 0"	7' - 0"	2"	2	HM	PT	HW GROUP 4	AIRTEQ 9500, ASSA CYLINDER	HM	PT	7 3/4"	2	3/4 HR	Yes	
126	PROGRAM	Phase 1 PART B	b	Level 1	3' - 0"	7' - 0"	2"	2	HM	PT	HW GROUP 4	AIRTEQ 9500, ASSA CYLINDER	HM	PT	7 3/4"	2	3/4 HR	Yes	
127	STAIR	Phase 1 PART B	l	Level 1	3' - 0"	7' - 0"	2"	2	HM	PT	HW GROUP 4	AIRTEQ 9500, ASSA CYLINDER	HM	PT	7 3/4"	2	1 HR	Yes	
129	ELECT.	Phase 1 PART B		Level 1	0"	0"													
130	STAIR	Phase 1 PART B	d	Level 1	3' - 0"	7' - 0"	2"	2	HM	PT	HW GROUP 3	AIRTEQ 9500, ASSA CYLINDER	HM	PT	7 3/4"	2		Yes	
131	DAY ROOM	Phase 1 PART B	h	Level 1	3' - 0"	7' - 0"	1 3/4"	2	HM	PT	HW GROUP 2	AIRTEQ 9500, ASSA CYLINDER	HM	PT	7 3/4"	2	3/4 HR	Yes	REFLECTIVE FILM ON GLASS
132	CELL	Phase 1 PART B	c	Level 1	3' - 0"	7' - 0"	2"	2	HM	PT	HW GROUP 1	AIRTEQ 9500, ASSA CYLINDER	HM	PT	7 3/4"	2	20 MIN	Yes	FOOD PASS KEY'D TO MATCH ATTORNEY CLIENT ROOMS
133	CELL	Phase 1 PART B	c	Level 1	3' - 0"	7' - 0"	2"	2	HM	PT	HW GROUP 1	AIRTEQ 9500, ASSA CYLINDER	HM	PT	7 3/4"	2	20 MIN	Yes	FOOD PASS KEY'D TO MATCH ATTORNEY CLIENT ROOMS
134	CELL	Phase 1 PART B	c	Level 1	3' - 0"	7' - 0"	2"	2	HM	PT	HW GROUP 1	AIRTEQ 9500, ASSA CYLINDER	HM	PT	7 3/4"	2	20 MIN	Yes	FOOD PASS KEY'D TO MATCH ATTORNEY CLIENT ROOMS
135	CELL	Phase 1 PART B	c	Level 1	3' - 0"	7' - 0"	2"	2	HM	PT	HW GROUP 1	AIRTEQ 9500, ASSA CYLINDER	HM	PT	7 3/4"	2	20 MIN	Yes	FOOD PASS KEY'D TO MATCH ATTORNEY CLIENT ROOMS
136	CELL	Phase 1 PART B	c	Level 1	3' - 0"	7' - 0"	2"	2	HM	PT	HW GROUP 1	AIRTEQ 9500, ASSA CYLINDER	HM	PT	7 3/4"	2	20 MIN	Yes	FOOD PASS KEY'D TO MATCH ATTORNEY CLIENT ROOMS
137	CELL	Phase 1 PART B	c	Level 1	3' - 0"	7' - 0"	2"	2	HM	PT	HW GROUP 1	AIRTEQ 9500, ASSA CYLINDER	HM	PT	7 3/4"	2	20 MIN	Yes	FOOD PASS KEY'D TO MATCH ATTORNEY CLIENT ROOMS
138	CELL	Phase 1 PART B	c	Level 1	3' - 0"	7' - 0"	2"	2	HM	PT	HW GROUP 1	AIRTEQ 9500, ASSA CYLINDER	HM	PT	7 3/4"	2	20 MIN	Yes	FOOD PASS KEY'D TO MATCH ATTORNEY CLIENT ROOMS
139	CELL	Phase 1 PART B	c	Level 1	3' - 0"	7' - 0"	2"	2	HM	PT	HW GROUP 1	AIRTEQ 9500, ASSA CYLINDER	HM	PT	7 3/4"	2	20 MIN	Yes	FOOD PASS KEY'D TO MATCH ATTORNEY CLIENT ROOMS
140	CELL	Phase 1 PART B	c	Level 1	3' - 0"	7' - 0"	2"	2	HM	PT	HW GROUP 1	AIRTEQ 9500, ASSA CYLINDER	HM	PT	7 3/4"	2	20 MIN	Yes	FOOD PASS KEY'D TO MATCH ATTORNEY CLIENT ROOMS
141	CELL	Phase 1 PART B	c	Level 1	3' - 0"	7' - 0"	2"	2	HM	PT	HW GROUP 1	AIRTEQ 9500, ASSA CYLINDER	HM	PT	7 3/4"	2	20 MIN	Yes	FOOD PASS KEY'D TO MATCH ATTORNEY CLIENT ROOMS
142	ADA CELL	Phase 1 PART B	c	Level 1	3' - 0"	7' - 0"	2"	2	HM	PT	HW GROUP 1	AIRTEQ 9500, ASSA CYLINDER	HM	PT	7 3/4"	2	20 MIN	Yes	FOOD PASS KEY'D TO MATCH ATTORNEY CLIENT ROOMS
143	CELL	Phase 1 PART B	c	Level 1	3' - 0"	7' - 0"	2"	2	HM	PT	HW GROUP 1	AIRTEQ 9500, ASSA CYLINDER	HM	PT	7 3/4"	2	20 MIN	Yes	FOOD PASS KEY'D TO MATCH ATTORNEY CLIENT ROOMS
144	CELL	Phase 1 PART B	c	Level 1	3' - 0"	7' - 0"	2"	2	HM	PT	HW GROUP 1	AIRTEQ 9500, ASSA CYLINDER	HM	PT	7 3/4"	2	20 MIN	Yes	FOOD PASS KEY'D TO MATCH ATTORNEY CLIENT ROOMS
145	CELL	Phase 1 PART B	c	Level 1	3' - 0"	7' - 0"	2"	2	HM	PT	HW GROUP 1	AIRTEQ 9500, ASSA CYLINDER	HM	PT	7 3/4"	2	20 MIN	Yes	FOOD PASS KEY'D TO MATCH ATTORNEY CLIENT ROOMS
146	CELL	Phase 1 PART B	c	Level 1	3' - 0"	7' - 0"	2"	2	HM	PT	HW GROUP 1	AIRTEQ 9500, ASSA CYLINDER	HM	PT	7 3/4"	2	20 MIN	Yes	FOOD PASS KEY'D TO MATCH ATTORNEY CLIENT ROOMS
147	CORR. 133	Phase 1 PART B	d	Level 1	3' - 0"	7' - 0"	2"	2	HM	PT	HW GROUP 8	AIRTEQ 9500, ASSA CYLINDER	HM	PT	7 3/4"	2	3/4 HR	Yes	
148	CORR. 133	Phase 1 PART B	d	Level 1	3' - 0"	7' - 0"	2"	2	HM	PT	HW GROUP 3	AIRTEQ 9500, ASSA CYLINDER	HM	PT	7 3/4"	2		Yes	
149	MECH / ELECT	Phase 1 PART B	k	Level 1	3' - 0"	7' - 0"	2"	2	HM	PT	HW GROUP 8	AIRTEQ 9500, ASSA CYLINDER	HM	PT	7 3/4"	2	3/4 HR	Yes	
150	MECH / ELECT	Phase 1 PART B	d	Level 1	3' - 0"	7' - 0"	2"	2	HM	PT	HW GROUP 3	AIRTEQ 9500, ASSA CYLINDER	HM	PT	7 3/4"	2		Yes	
151	MECH / ELECT	Phase 1 PART B		Level 1	7' - 0"	10' - 0"	3"		HM	PT	HW GROUP R1	PER MANUFACTURER	HM	PT					DOOR MUST HAVE A DPS AND BE CONTROLLED BY CONTROL
152	DORM	Phase 1 PART B	h	Level 1	3' - 0"	7' - 0"	1 3/4"	2	HM	PT	HW GROUP 2	AIRTEQ 9500, ASSA CYLINDER	HM	PT	7 3/4"	2	3/4 HR	Yes	REFLECTIVE FILM ON GLASS
153	DORM	Phase 1 PART B	d	Level 1	3' - 0"	7' - 0"	2"	2	HM	PT	HW GROUP 3	AIRTEQ 9500, ASSA CYLINDER	HM	PT	7 3/4"	2		Yes	
154	INDOOR REC	Phase 1 PART B	h	Level 1	3' - 0"	7' - 0"	1 3/4"	2	HM	PT	HW GROUP 2	AIRTEQ 9500, ASSA CYLINDER	HM	PT	7 3/4"	2	3/4 HR	Yes	REFLECTIVE FILM ON GLASS
155	INDOOR REC	Phase 1 PART B	b	Level 1	3' - 0"	7' - 0"	2"		HM	PT	HW GROUP 3	AIRTEQ 9500, ASSA CYLINDER	HM	PT	7 3/4"	2		Yes	
156	INDOOR REC	Phase 1 PART B	b	Level 1	3' - 0"	7' - 0"	2"	2	HM	PT	HW GROUP 3	AIRTEQ 9500, ASSA CYLINDER	HM	PT	7 3/4"	2		Yes	
157	OUTDOOR REC	Phase 1 PART B	k	Level 1	3' - 0"	7' - 0"	2"	2	HM	PT	HW GROUP 3B	AIRTEQ 9500, ASSA CYLINDER	HM	PT	7 3/4"	2		Yes	
158	OUTDOOR REC	Phase 1 PART B	k	Level 1	3' - 0"	7' - 0"	2"	2	HM	PT	HW GROUP 3B	AIRTEQ 9500, ASSA CYLINDER	HM	PT	7 3/4"	2		Yes	
159	CORR. 108	Phase 1 PART B	k	Level 1	3' - 0"	7' - 0"	2"	2	HM	PT	HW GROUP 3A	AIRTEQ 9500, ASSA CYLINDER	HM	PT	7 3/4"	2	3/4 HR	Yes	
200	STAIR	Phase 1 PART B	l	UPPER MEZZANINE	3' - 0"	7' - 0"	2"	2	HM	PT	HW GROUP 4	AIRTEQ 9500, ASSA CYLINDER	HM	PT	7 3/4"	2	1 HR	Yes	
201	STAIR	Phase 1 PART B	b	UPPER MEZZANINE	3' - 0"	7' - 0"	2"	2	HM	PT	HW GROUP 4	AIRTEQ 9500, ASSA CYLINDER	HM	PT	7 3/4"	2	1 HR	Yes	
202	PROGRAM	Phase 1 PART B	b	UPPER MEZZANINE	3' - 0"	7' - 0"	2"	2	HM	PT	HW GROUP 4	AIRTEQ 9500, ASSA CYLINDER	HM	PT	7 3/4"	2	3/4 HR	Yes	
203	MECH CHASE / STORAGE	Phase 1 PART B	b	UPPER MEZZANINE	3' - 0"	7' - 0"	2"	2	HM	PT	HW GROUP 4	AIRTEQ 9500, ASSA CYLINDER	HM	PT	7 3/4"	2	3/4 HR	Yes	
204	PROGRAM	Phase 1 PART B	b	UPPER MEZZANINE	3' - 0"	7' - 0"	2"	2	HM	PT	HW GROUP 4	AIRTEQ 9500, ASSA CYLINDER	HM	PT	7 3/4"	2	3/4 HR	Yes	
205	STAIR	Phase 1 PART B	l	UPPER MEZZANINE	3' - 0"	7' - 0"	2"	2	HM	PT	HW GROUP 4	AIRTEQ 9500, ASSA CYLINDER	HM	PT	7 3/4"	2	3/4 HR	Yes	
206	CELL	Phase 1 PART B	c	UPPER MEZZANINE	3' - 0"	7' - 0"	2"	2	HM	PT	HW GROUP 1	AIRTEQ 9500, ASSA CYLINDER	HM	PT	7 3/4"	2	20 MIN	Yes	FOOD PASS KEY'D TO MATCH ATTORNEY CLIENT ROOMS
207	CELL	Phase 1 PART B	c	UPPER MEZZANINE	3' - 0"	7' - 0"	2"	2	HM	PT	HW GROUP 1	AIRTEQ 9500, ASSA CYLINDER	HM	PT	7 3/4"	2	20 MIN	Yes	FOOD PASS KEY'D TO MATCH ATTORNEY CLIENT ROOMS
208	CELL	Phase 1 PART B	c	UPPER MEZZANINE	3' - 0"	7' - 0"	2"	2	HM	PT	HW GROUP 1	AIRTEQ 9500, ASSA CYLINDER	HM	PT	7 3/4"	2	20 MIN	Yes	FOOD PASS KEY'D TO MATCH ATTORNEY CLIENT ROOMS
209	CELL	Phase 1 PART B	c	UPPER MEZZANINE	3' - 0"	7' - 0"	2"	2	HM	PT	HW GROUP 1	AIRTEQ 9500, ASSA CYLINDER	HM	PT	7 3/4"	2	20 MIN	Yes	FOOD PASS KEY'D TO MATCH ATTORNEY CLIENT ROOMS
210	CELL	Phase 1 PART B	c	UPPER MEZZANINE	3' - 0"	7' - 0"	2"	2	HM	PT	HW GROUP 1	AIRTEQ 9500, ASSA CYLINDER	HM	PT	7 3/4"	2	20 MIN	Yes	FOOD PASS KEY'D TO MATCH ATTORNEY CLIENT ROOMS
211	CELL	Phase 1 PART B	c	UPPER MEZZANINE	3' - 0"	7' - 0"	2"	2	HM	PT	HW GROUP 1	AIRTEQ 9500, ASSA CYLINDER	HM	PT	7 3/4"	2	20 MIN	Yes	FOOD PASS KEY'D TO MATCH ATTORNEY CLIENT ROOMS
212	CELL	Phase 1 PART B	c	UPPER MEZZANINE	3' - 0"	7' - 0"	2"	2	HM	PT	HW GROUP 1	AIRTEQ 9500, ASSA CYLINDER	HM	PT	7 3/4"	2	20 MIN	Yes	FOOD PASS KEY'D TO MATCH ATTORNEY CLIENT ROOMS
213	CELL	Phase 1 PART B	c	UPPER MEZZANINE	3' - 0"	7' - 0"	2"	2	HM	PT	HW GROUP 1	AIRTEQ 9500, ASSA CYLINDER	HM	PT	7 3/4"	2	20 MIN	Yes	FOOD PASS KEY'D TO MATCH ATTORNEY CLIENT ROOMS
214	CELL	Phase 1 PART B	c	UPPER MEZZANINE	3' - 0"	7' - 0"	2"	2	HM	PT	HW GROUP 1	AIRTEQ 9500, ASSA CYLINDER	HM	PT	7 3/4"	2	20 MIN	Yes	FOOD PASS KEY'D TO MATCH ATTORNEY CLIENT ROOMS
215	CELL	Phase 1 PART B	c	UPPER MEZZANINE	3' - 0"	7' - 0"	2"	2	HM	PT	HW GROUP 1	AIRTEQ 9500, ASSA CYLINDER	HM	PT	7 3/4"	2	20 MIN	Yes	FOOD PASS KEY'D TO MATCH ATTORNEY CLIENT ROOMS
216	CELL	Phase 1 PART B	c	UPPER MEZZANINE	3' - 0"	7' - 0"	2"	2	HM	PT	HW GROUP 1	AIRTEQ 9500, ASSA CYLINDER	HM	PT	7 3/4"	2	20 MIN	Yes	FOOD PASS KEY'D TO MATCH ATTORNEY CLIENT ROOMS
217	CELL	Phase 1 PART B	c	UPPER MEZZANINE	3' - 0"	7' - 0"	2"	2	HM	PT	HW GROUP 1	AIRTEQ 9500, ASSA CYLINDER	HM	PT	7 3/4"	2	20 MIN	Yes	FOOD PASS KEY'D TO MATCH ATTORNEY CLIENT ROOMS
218	CELL	Phase 1 PART B	c	UPPER MEZZANINE	3' - 0"	7' - 0"	2"	2	HM	PT	HW GROUP 1	AIRTEQ 9500, ASSA CYLINDER	HM	PT	7 3/4"	2	20 MIN	Yes	FOOD PASS KEY'D TO MATCH ATTORNEY CLIENT ROOMS
219	CELL	Phase 1 PART B	c	UPPER MEZZANINE	3' - 0"	7' - 0"	2"	2	HM	PT	HW GROUP 1	AIRTEQ 9500, ASSA CYLINDER	HM	PT	7 3/4"	2	20 MIN	Yes	FOOD PASS KEY'D TO MATCH ATTORNEY CLIENT ROOMS
220	CELL	Phase 1 PART B	c	UPPER MEZZANINE	3' - 0"	7' - 0"	2"	2	HM	PT	HW GROUP 1	AIRTEQ 9500, ASSA CYLINDER	HM	PT	7 3/4"	2	20 MIN	Yes	FOOD PASS KEY'D TO MATCH ATTORNEY CLIENT ROOMS
221	CORR. 233	Phase 1 PART B	d	UPPER MEZZANINE	3' - 0"	7' - 0"	2"	2	HM	PT	HW GROUP 8	AIRTEQ 9500, ASSA CYLINDER	HM	PT	7 3/4"	2	3/4 HR	Yes	
222	DORM	Phase 1 PART B	k	UPPER MEZZANINE	1' - 8"	3' - 8"	2"	2	HM	PT	HW GROUP 8	AIRTEQ 9500, ASSA CYLINDER	HM	PT	7 3/4"	2	3/4 HR	Yes	
C1		Phase 1 PART B	p	Level 1	1' - 8"	3' - 8"	2"	2	HM	PT	HW GROUP C1	DEADBOLT	HM	PT	7 3/4"	2	20 MIN		THERE ARE 7 OF THESE CHASE DOORS
C2		Phase 1 PART B	p	UPPER MEZZANINE	1' - 8"	3' - 8"	2"	2	HM	PT	HW GROUP C1	DEADBOLT	HM	PT	7 3/4"	2	20 MIN		THERE ARE 7 OF THESE CHASE DOORS
C3	ADA CELL	Phase 1 PART B	p	Level 1	1' - 8"	3' - 8"	2"	2	HM	PT	HW GROUP C2	DEADBOLT	HM	PT	7 3/4"	2			
C4	CELL	Phase 1 PART B	p	UPPER MEZZANINE	1' - 8"	3' - 8"	2"	2	HM	PT	HW GROUP C2	DEADBOLT	HM	PT	7 3/4"	2			
C5	INDOOR REC	Phase 1 PART B	p	Level 1	2' - 0"	4' - 0"	2"	2	HM	PT	HW GROUP C2	DEADBOLT	HM	PT	7 3/4"	2			

DOOR NOTES
1. ALL CELLS TO BE A SEPERATE KEY
2. ALL EXTERIOR DOORS TO BE A SEPERATE KEY
3. REFLECTIVE COATING 3M PRIVACY SERIES ONE-WAY MIRROR OR EQUAL, CONTROL ROOM SHALL BE REFLECTIVE TOWARD THE HALLWAY SIDE WITH THE FILM ON THE CONTROL ROOM SIDE CORR 8 WINDOWS INTO CELLS SHALL BE REFLECTIVE CELL SIDE WITH THE FILM PLACED ON THE CORR 8 SIDE
4. ALL DOOR FRAMES SHALL BE FULLY GROUTED

LICENSED ARCHITECT AR-986981
KYNDELL M. MADSEN STATE OF IDAHO
2/24/25

DATE

PHASE 1 PART B FOR:
TWIN FALLS COUNTY - WRIGHT AVE JAIL
2515 Wright Ave, Twin Falls, ID 83301
PH 1 PART B - DOOR SCHEDULE

Laughlin Ricks Architecture
architecture/planning
134 3RD Ave East * Twin Falls, Idaho 83301
(208) 736-8050

DATE: 2/24/25
KM Drawn
RCR Checked
#23029 PROJECT #

A1B-9.1

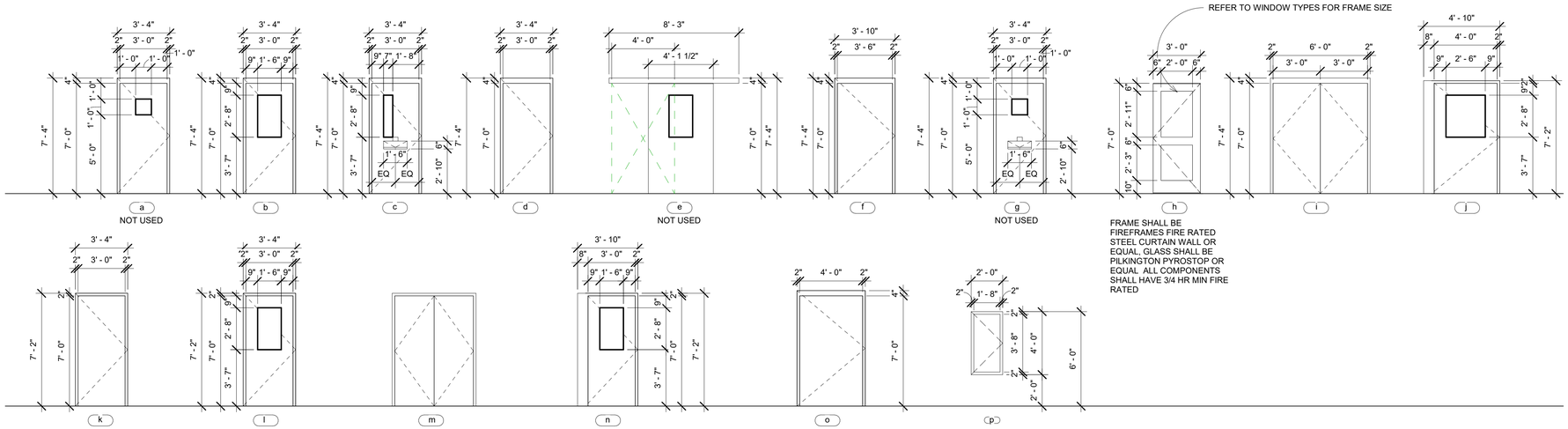

FRAME SHALL BE FIREFRAMES FIRE RATED STEEL CURTAIN WALL OR EQUAL, GLASS SHALL BE PILKINGTON PYROSTOP OR EQUAL ALL COMPONENTS SHALL HAVE 3/4 HR MIN FIRE RATED

IBC 408.7 SECURITY GLAZING
IN OCCUPANCIES IN GROUP I-3, WINDOWS AND DOORS IN 1 HR FIRE BARRIERS, FIRE PARTIONS, & SMOKE BARRIERS CONSTRUCTED IN ACCORDANCE WITH SECTION 709 SHALL BE PERMITTED TO HAVE SECURITY GLAZING INSTALLED PROVIDED THAT THE FOLLOWING CONDITIONS ARE MET.

1. INDIVIDUAL PANELS OF GLAZING SHALL NOT EXCEED 1,296 SQ IN.
2. THE GLAZING SHALL BE PROTECTED ON BOTH SIDES BY AN AUTOMATIC SPRINKLER SYSTEM. THE SPRINKLER SYSTEM SHALL BE DESIGNED TO, WHEN ACTUATED, WET COMPLETELY THE ENTIRE SURFACE OF ANY GLAZING AFFECTED BY FIRE
3. THE GLAZING SHALL BE IN A GASKETED FRAME AND INSTALLED IN SUCH A MANNER THAT THE FRAMING SYSTEM WILL DEFLECT WITHOUT BREAKING (LOADING) THE GLASS BEFORE THE SPRINKLER SYSTEM OPERATES
4. OBSTRUCTIONS, SUCH AS CURTAIN RODS, DRAPERY TRAVERSE RODS, CURTAINS, DRAPES, OR SIMILAR MATERIALS SHALL NOT BE INSTALLED BETWEEN AUTOMATIC SPRINKLERS AND THE GLAZING

NOTE: REFER TO DOOR SCHEDULE FOR DOOR FIRE RATINGS U.N.O.

DOOR TYPES - PH 1 PART B
1/4" = 1'-0"

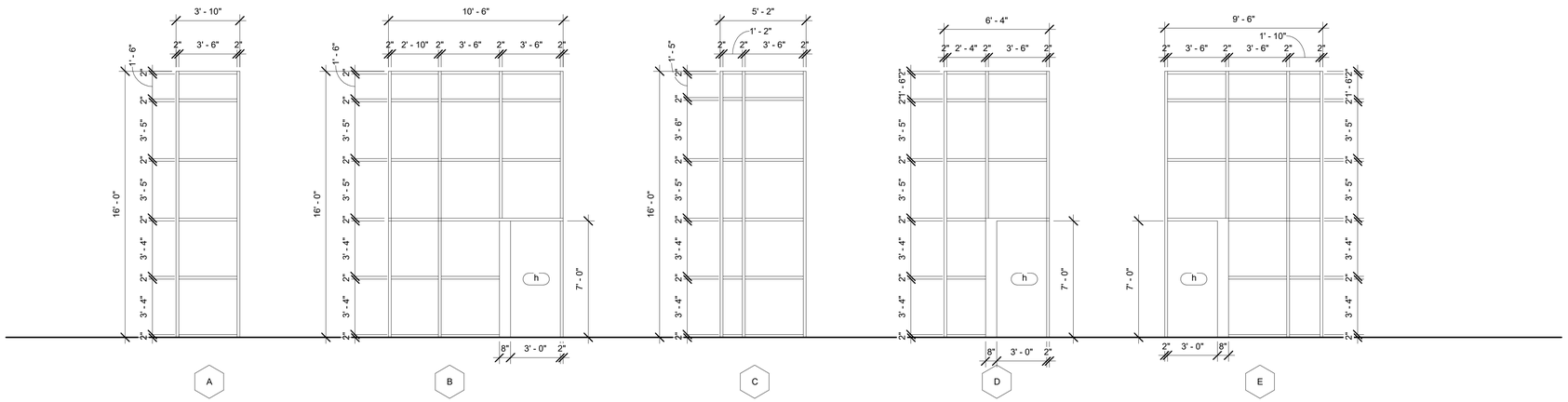

FIRE RATED CURTAIN WALL - FRAMES SHALL BE FIREFRAMES FIRE RATED STEEL CURTAIN WALL OR EQUAL, GLASS SHALL BE PILKINGTON PYROSTOP OR EQUAL ALL COMPONENTS SHALL HAVE 3/4 HR MIN FIRE RATED
ALL WINDOWS SHALL HAVE A REFLECTIVE COATING 3M PRIVACY SERIES ONE-WAY MIRROR OR EQUAL.
CONTROL ROOM SHALL BE REFLECTIVE TOWARD THE HALLWAY SIDE WITH THE FILM ON THE CONTROL ROOM SIDE
CORR 8 WINDOWS INTO CELLS SHALL BE REFLECTIVE CELL SIDE WITH THE FILM PLACED ON THE CORR 8 SIDE

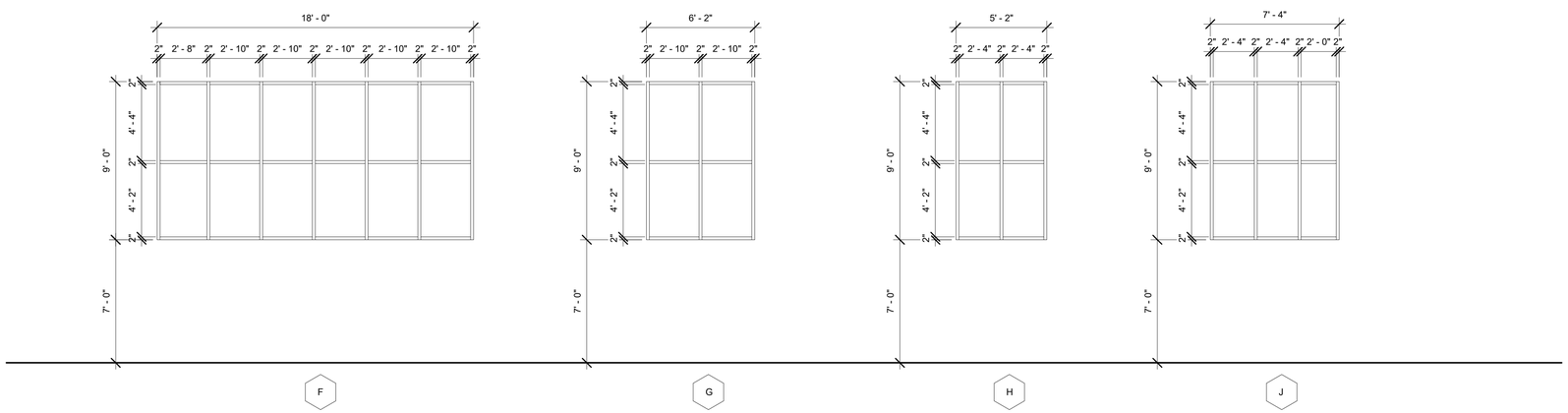

FIRE RATED CURTAIN WALL - FRAMES SHALL BE FIREFRAMES FIRE RATED STEEL CURTAIN WALL OR EQUAL, GLASS SHALL BE PILKINGTON PYROSTOP OR EQUAL ALL COMPONENTS SHALL HAVE 3/4 HR MIN FIRE RATED
ALL WINDOWS SHALL HAVE A REFLECTIVE COATING 3M PRIVACY SERIES ONE-WAY MIRROR OR EQUAL.
CONTROL ROOM SHALL BE REFLECTIVE TOWARD THE HALLWAY SIDE WITH THE FILM ON THE CONTROL ROOM SIDE
CORR 8 WINDOWS INTO CELLS SHALL BE REFLECTIVE CELL SIDE WITH THE FILM PLACED ON THE CORR 8 SIDE

PH 1B WINDOW TYPES
1/4" = 1'-0"

LICENSED ARCHITECT AR-986981
KYNDELL M. MADSEN STATE OF IDAHO
2/24/25

DATE

PHASE 1 PART B FOR:
TWIN FALLS COUNTY - WRIGHT AVE JAIL
2515 Wright Ave, Twin Falls, ID 83301
PH 1 PART B - DOOR & WINDOW TYPES

Laughlin Ricks Architecture
architecture/planning
134 3RD Ave East * Twin Falls, Idaho 83301
(208) 736-8050

DATE: 2/24/25
KM Drawn
RCR Checked
#23029 PROJECT #

A1B-9.3

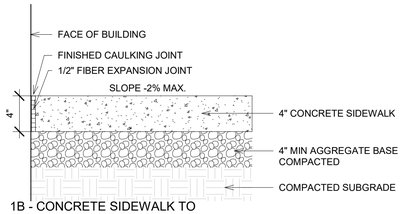

1 1B - CONCRETE SIDEWALK TO BUILDING WALL DETAIL
1 1/2" = 1'-0"

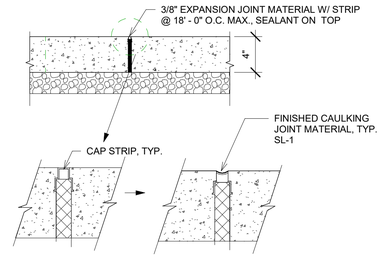

2 1B - CONCRETE EXPANSION JOINT
1 1/2" = 1'-0"

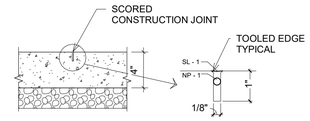

3 1B - CONCRETE CONTROL JOINT
1 1/2" = 1'-0"

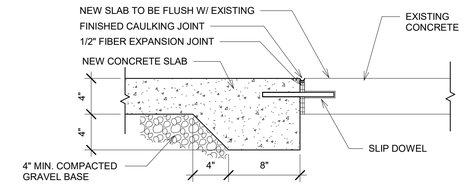

4 1B - NEW CONCRETE TO EXISTING
1 1/2" = 1'-0"

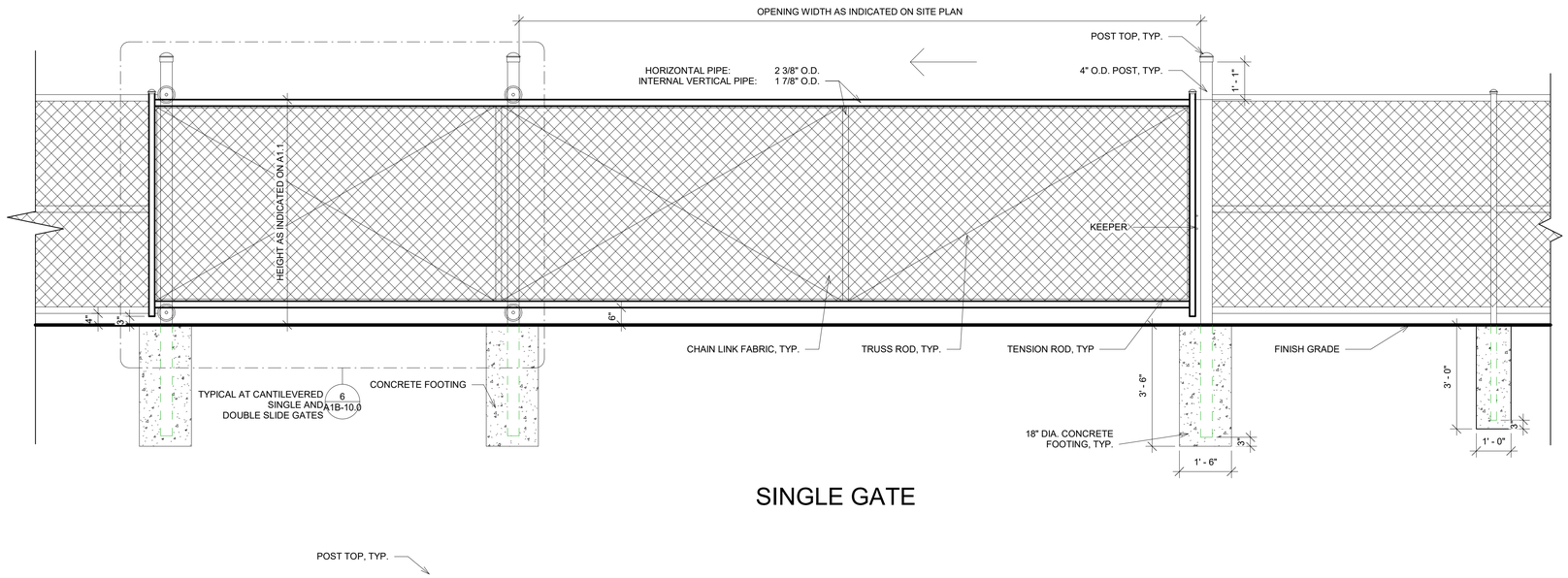

SINGLE GATE

5 SITE - CANTILEVER SLIDE GATE
1/2" = 1'-0"

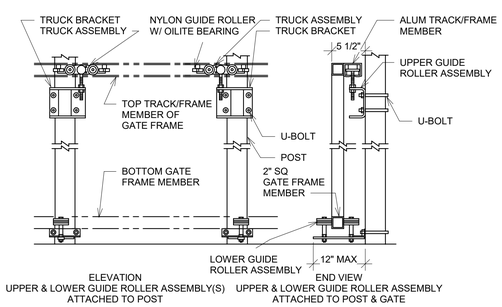

6 SITE - CANTILEVERED ROLLER GATE DETAIL
1" = 1'-0"

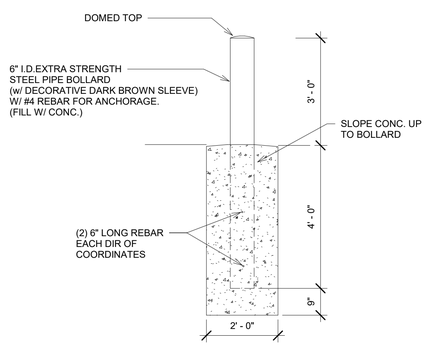

7 BOLLARD DETAIL
1/2" = 1'-0"

LICENSED ARCHITECT
AR-986981
KYNDELL M. MADSEN
STATE OF IDAHO
2/24/25

DATE

PHASE 1 PART B FOR:
TWIN FALLS COUNTY - WRIGHT AVE JAIL
2515 Wright Ave, Twin Falls, ID 83301
DETAILS - SITE

Laughlin Ricks Architecture
architecture/planning
134 3RD Ave East * Twin Falls, Idaho 83301
(208) 736-8050

DATE: 2/24/25
KM Drawn
RCR Checked
#23029 PROJECT #

A1B-10.0

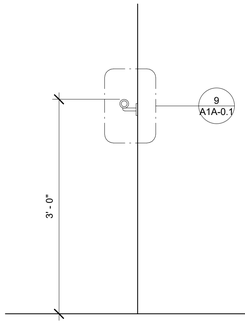

A

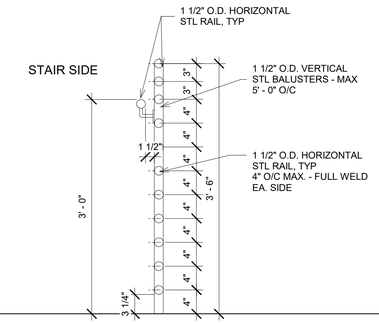

B

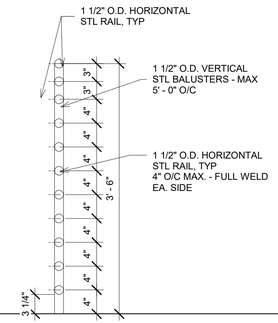

C

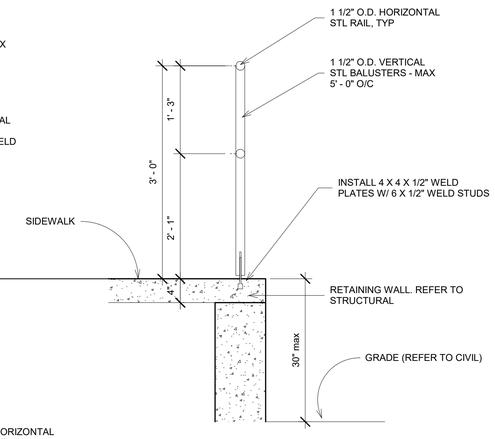

D

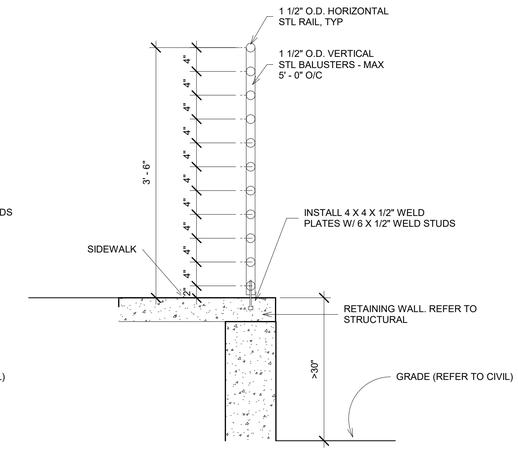

E

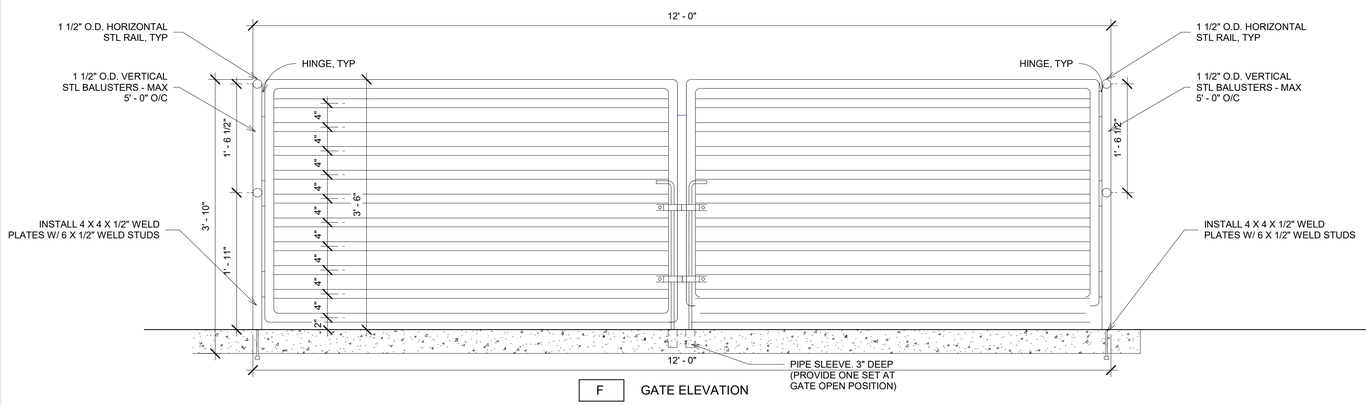

F GATE ELEVATION

1 RAILINGS
1" = 1'-0"

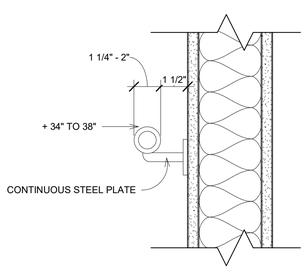

2 HANDRAIL TO BUILDING DETAIL.
3" = 1'-0"

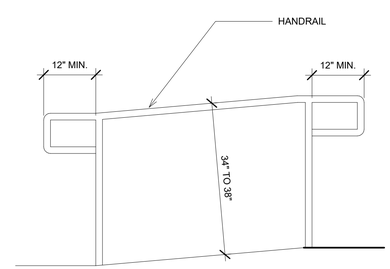

3 RAMP/STAIR HANDRAIL EXTENTIONS
3/4" = 1'-0"

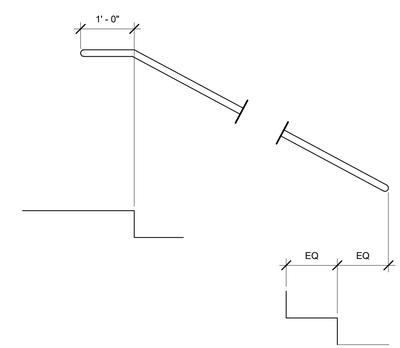

4 STAIR EXTENSIONS Copy 1
3/4" = 1'-0"

LICENSED
ARCHITECT
AR-986981
KYNDELL M. MADSEN
STATE OF IDAHO
2/24/25

DATE

PHASE 1 PART B FOR:
TWIN FALLS COUNTY - WRIGHT AVE JAIL
2515 Wright Ave, Twin Falls, ID 83301
DETAILS - RAILINGS

Laughlin Ricks Architecture
architecture/planning
134 3RD Ave East * Twin Falls, Idaho 83301
(208) 736-8050

DATE: 2/24/25
KM Drawn
RCR Checked
#23029 PROJECT #

A1B-10.1

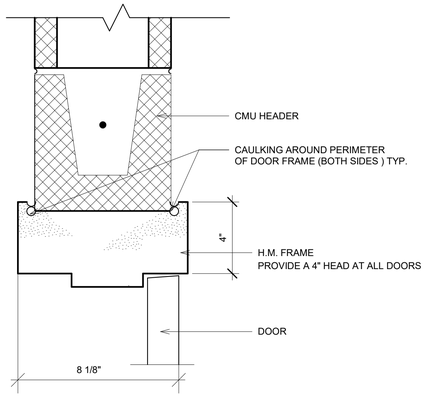

1 HM DOOR HEAD DETAIL @ CMU
3" = 1'-0"

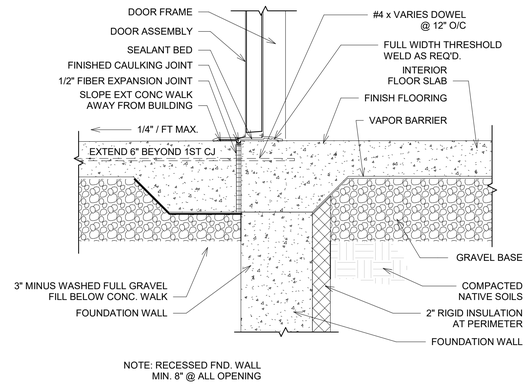

2 1B - DOOR THRESHOLD DETAIL
1 1/2" = 1'-0"

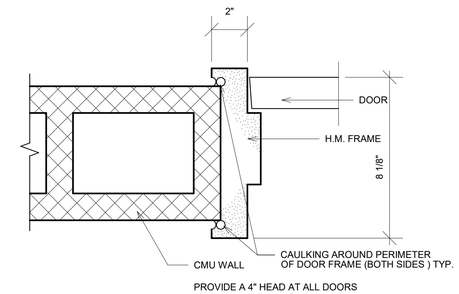

3 1B- HM DOOR JAMB DETAIL
3" = 1'-0"

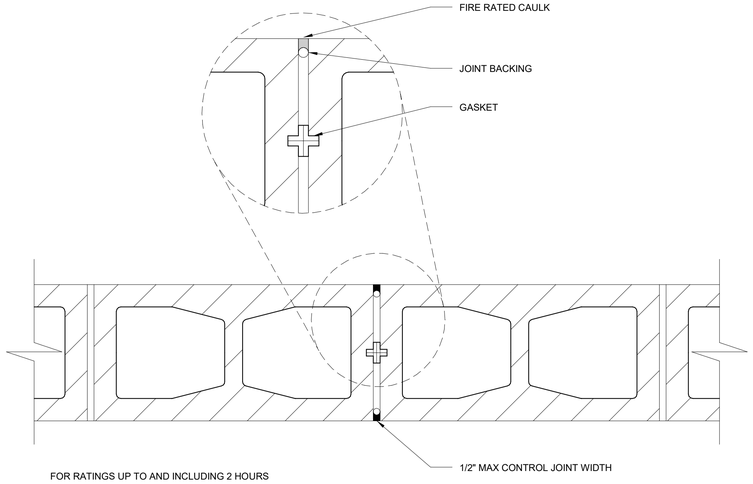

FOR RATINGS UP TO AND INCLUDING 2 HOURS

4 FIRE RATED CONTROL JOINT DETAIL,
TYP. @ EXTERIOR CMU Copy 1
3" = 1'-0"

LICENSED
ARCHITECT
AR-986981
KYNDELL M. MADSEN
STATE OF IDAHO
2/24/25

DATE

PHASE 1 PART B FOR:
TWIN FALLS COUNTY - WRIGHT AVE JAIL
2515 Wright Ave, Twin Falls, ID 83301
DETAILS - CMU MATERIALS AND DOORS

Laughlin Ricks Architecture
architecture/planning
134 3RD Ave East, * Twin Falls, Idaho 83301
(208) 736-8050

DATE: 2/24/25
KM Drawn
RCR Checked
#23029 PROJECT #

A1B-10.2

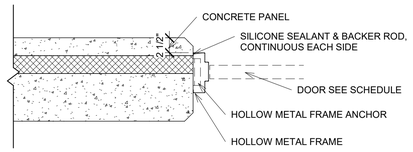

1 HM DOOR JAM @ PRECAST
1" = 1'-0"

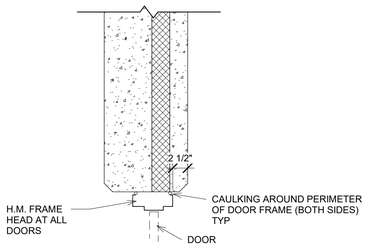

2 HM DOOR HEAD @ PRECAST
1" = 1'-0"

1. SIKAFLEX NP2
2. SIKAFLEX CR195 OR SIKADUR-31 HI-MOD GEL

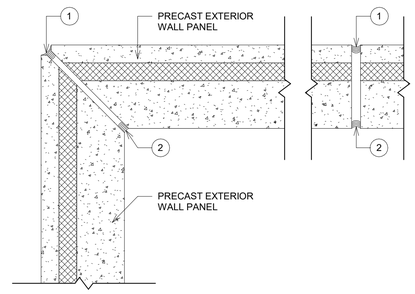

3 PRECAST EXT WALL CORNER
1" = 1'-0"

1. SIKAFLEX NP2
2. SIKAFLEX CR195 OR SIKADUR-31 HI-MOD GEL

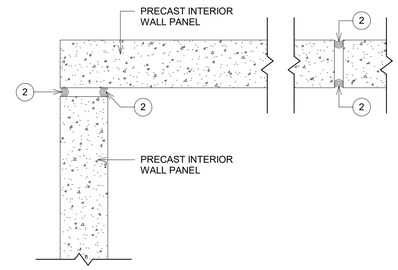

4 PRECAST INT WALL CORNER
1" = 1'-0"

LICENSED ARCHITECT AR-986981
KYNDELL M. MADSEN STATE OF IDAHO
2/24/25

DATE

PHASE 1 PART B FOR:
TWIN FALLS COUNTY - WRIGHT AVE JAIL
2515 Wright Ave, Twin Falls, ID 83301
DETAILS - PRECAST MATERIALS AND DOORS

Laughlin Ricks Architecture
architecture/planning
134 3RD Ave East * Twin Falls, Idaho 83301
(208) 736-8050

DATE: 2/24/25
KM Drawn
RCR Checked
#23029 PROJECT #

A1B-10.3

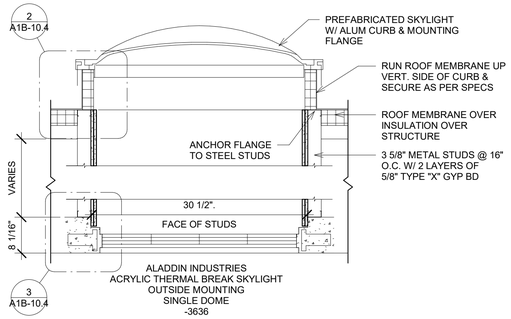

1 SKYLIGHT DETAIL
3/4" = 1'-0"

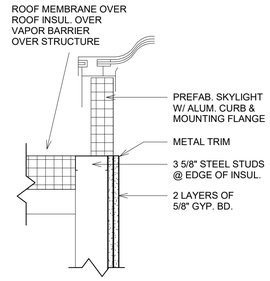

2 SKYLIGHT CURB DETAIL
1 1/2" = 1'-0"

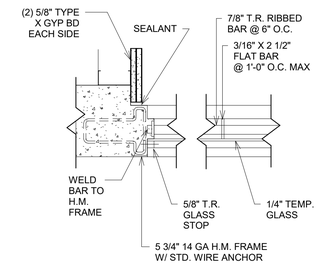

3 SKYLIGHT JAMB
1 1/2" = 1'-0"

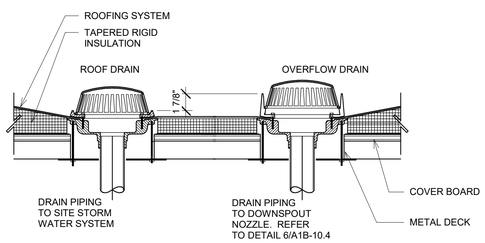

4 ROOF DRAIN DETAIL
1 1/2" = 1'-0"

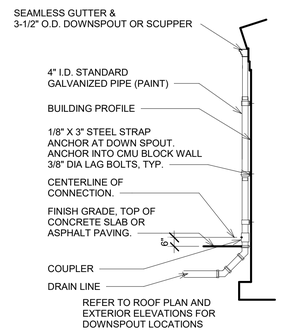

5 GUTTER & DOWNSPOUT
1/4" = 1'-0"

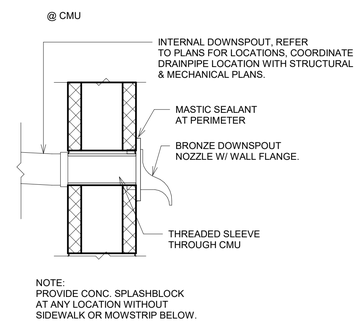

6 OVERFLOW DOWNSPOUT NOZZLE DETAIL
1 1/2" = 1'-0"

LICENSED
ARCHITECT
AR-986981

KYNDELL M. MADSEN
STATE OF IDAHO

2/24/25

DATE

PHASE 1 PART B FOR:
TWIN FALLS COUNTY - WRIGHT AVE JAIL
2515 Wright Ave, Twin Falls, ID 83301
DETAILS - SKYLIGHTS & ROOF DRAINS

Laughlin Ricks Architecture
architecture/planning
134 3RD Ave East, * Twin Falls, Idaho 83301
(208) 736-8050

DATE: 2/24/25
KM Drawn
RCR Checked
#23029 PROJECT #

A1B-10.4

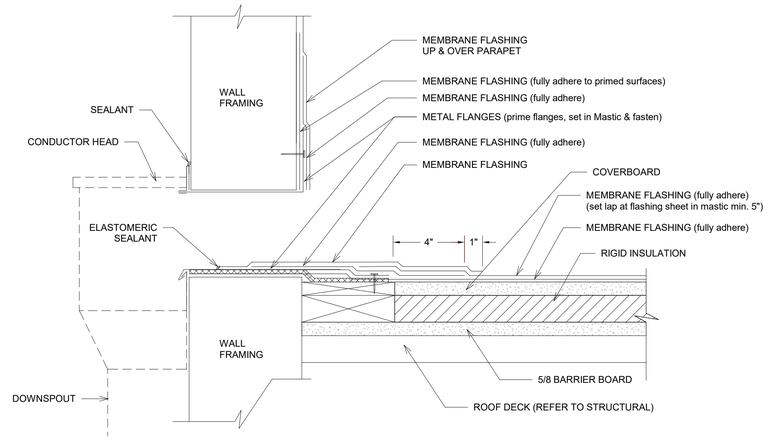

NOTE: REFER TO ROOF TYPES

1 SCUPPER W/ CONDUCTOR HEAD1
3" = 1'-0"

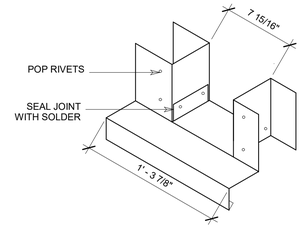

ISOMETRIC

SCALE: NO SCALE

2 SCUPPER ISO DETAIL1
1 1/2" = 1'-0"

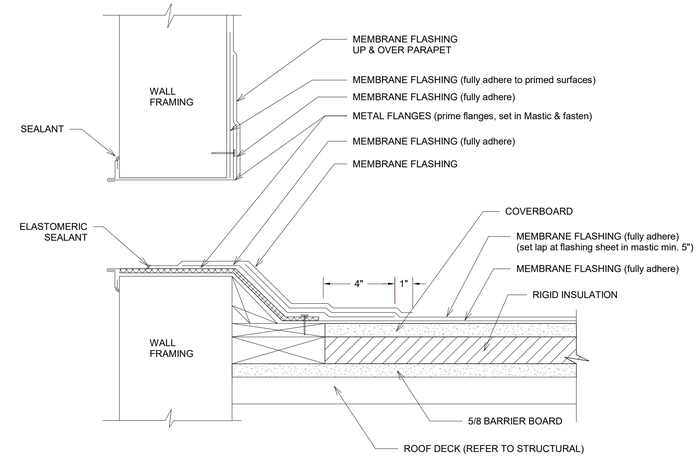

NOTE: REFER TO ROOF TYPES

3 OVERFLOW SCUPPER1
3" = 1'-0"

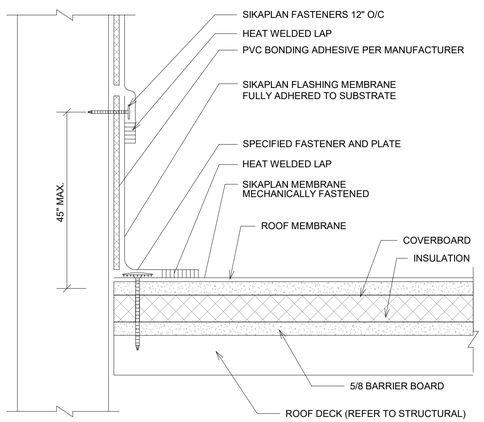

NOTE: REFER TO ROOF TYPES

4 HIGH PARAPET WALL FLASHING1
3" = 1'-0"

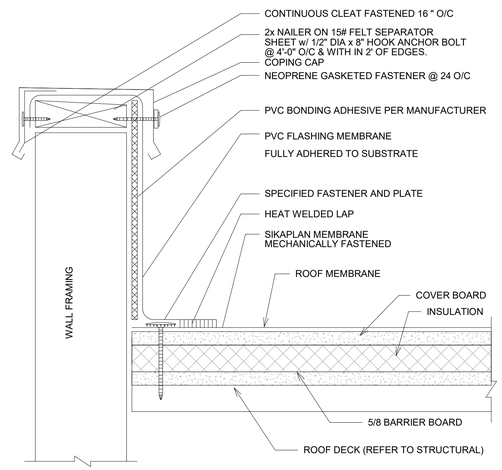

NOTE: REFER TO ROOF TYPES

5 PARAPET WALL FLASHING1
3" = 1'-0"

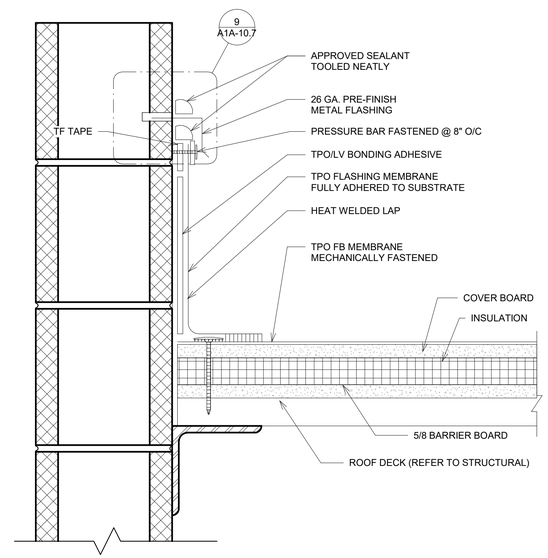

6 COUNTER FLASHING DETAIL Copy 1
3" = 1'-0"

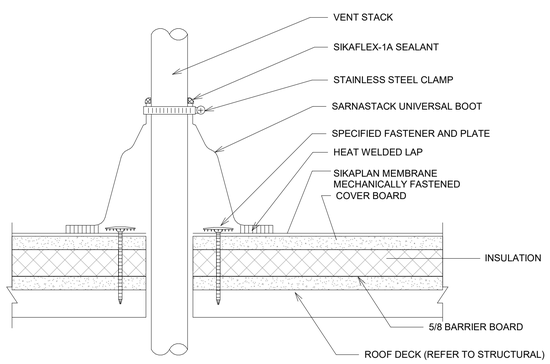

NOTE:

1. DO NOT CUT PREFABRICATED BOOT. IT MUST BE PULLED OVER VENT PIPE.
2. PREFABRICATED BOOTS ARE AVAILABLE IN SMALL & LARGE SIZES, AND MUST BE USED WHENEVER POSSIBLE TO FLASH PIPES 1" TO 8" IN DIAMETER.

7 PREFABRICATED VENT PIPE FLASHING1
3" = 1'-0"

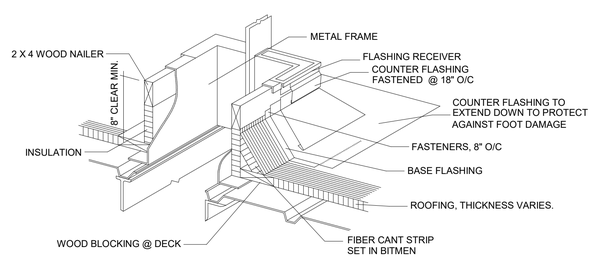

NOTE:
1. CURB, WOOD NAILER, INSULATION AND SEAL STRIP TO BE SUPPLIED BY CURB MANUFACTURE.
2. 4 X 4 PRESSURE TREATED PLATE TO BE USED FOR LEVELING OF CURB.

NOTE:
CONTRACTOR TO BUILD FLAT WOOD CURB
FOR FACTORY CURB TO SIT ON IF REQUIRED
BY MANUFACTURER.

8 TYP. EQUIPMENT & VENT CURB1
1 1/2" = 1'-0"

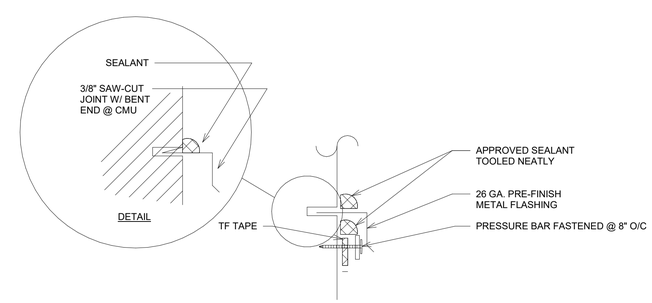

9 COUNTERFLASHING DETAIL1 Copy 1
3" = 1'-0"

LICENSED
ARCHITECT
AR-986981
KYNDELL M. MADSEN
STATE OF IDAHO
2/24/25

DATE

PHASE 1 PART B FOR:
TWIN FALLS COUNTY - WRIGHT AVE JAIL
2515 Wright Ave, Twin Falls, ID 83301
DETAILS - ROOF DETAILS

Laughlin Ricks Architecture
architecture/planning
134 3RD Ave East, * Twin Falls, Idaho 83301
(208) 736-8050

DATE: 2/24/25
KM RCR
Drawn Checked
#23029
PROJECT #

A1B-10.5

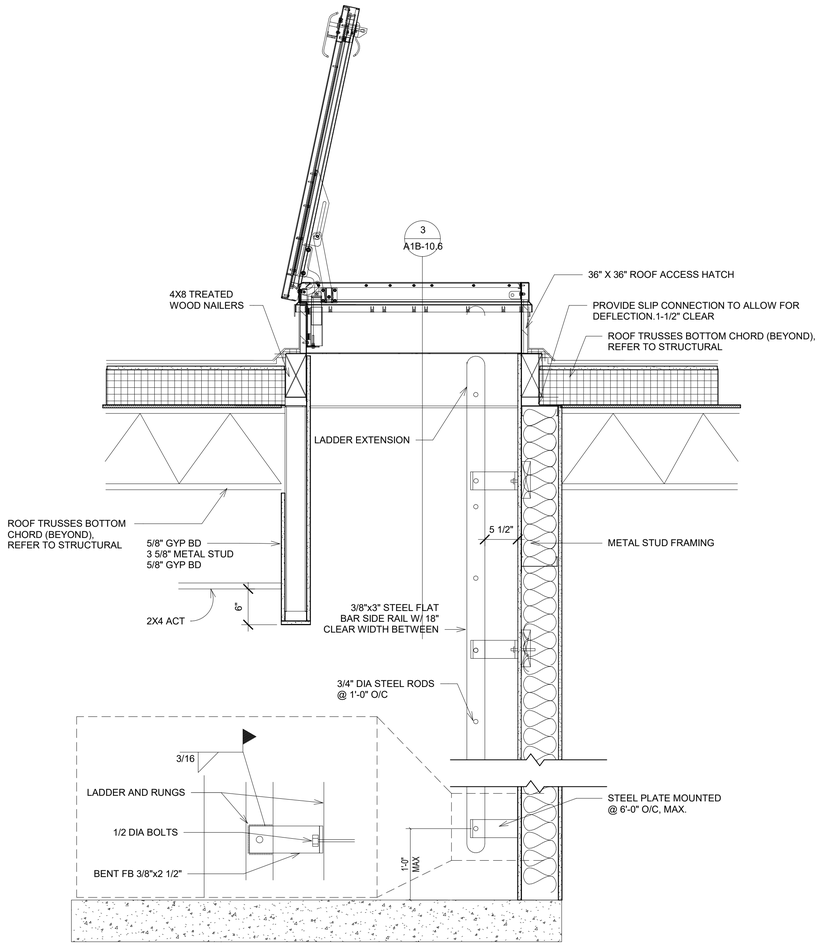

1 LADDER DETAIL / ROOF HATCH.
1" = 1'-0"

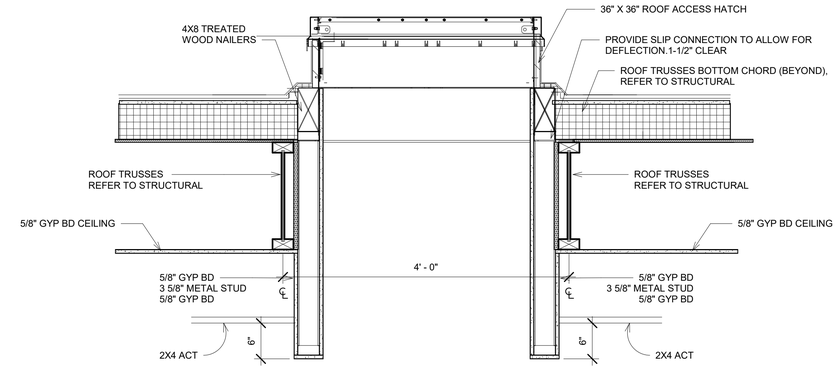

3 LADDER DETAIL / ROOF HATCH OPP.
1" = 1'-0"

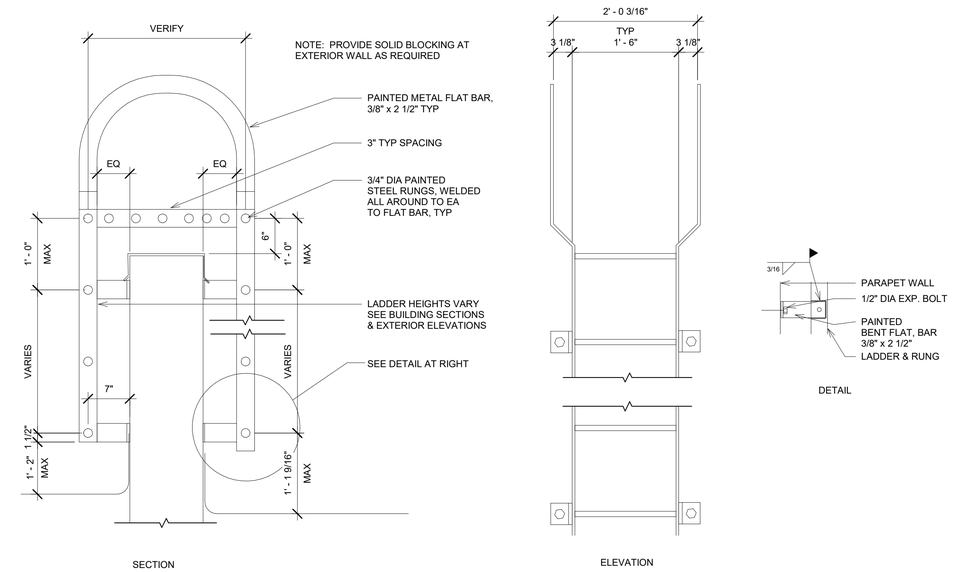

2 ROOF ACCESS LADDER Copy 1
1" = 1'-0"

LICENSED
ARCHITECT
AR-986981
KYNDELL M. MADSEN
STATE OF IDAHO
2/24/25

DATE

PHASE 1 PART B FOR:
TWIN FALLS COUNTY - WRIGHT AVE JAIL
2515 Wright Ave, Twin Falls, ID 83301
DETAILS - LADDERS & ACCESS HATCH

Laughlin Ricks Architecture
architecture/planning
134 3RD Ave East * Twin Falls, Idaho 83301
(208) 736-8050

DATE: 2/24/25
KM Drawn
RCR Checked
#23029 PROJECT #

A1B-10.6

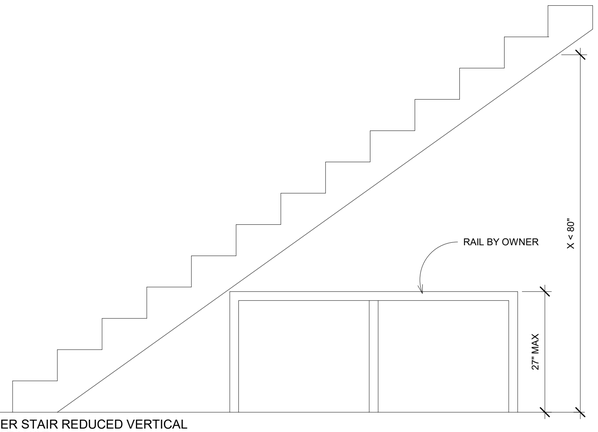

2 UNDER STAIR REDUCED VERTICAL CLEARANCE
3/4" = 1'-0"

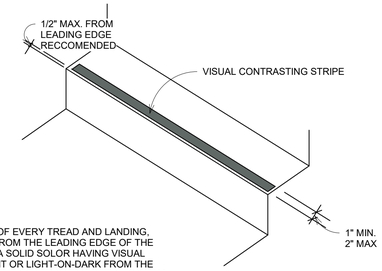

504.6 VISUAL CONTRAST.
THE LEADING 1 TO 2 INCHES OF EVERY TREAD AND LANDING, MEASURED HORIZONTALLY FROM THE LEADING EDGE OF THE NOSING, SHALL CONSIST OF A SOLID SOLOR HAVING VISUAL CONTRAST OF DARK-ON-LIGHT OR LIGHT-ON-DARK FROM THE REMAINDER OF THE TREAD. THE CONTRASTING MARKING SHALL BE DURABLE AND SHALL EXTEND FROM ONE SIDE OF EACH TREAD TO THE OTHER SIDE OF EACH TREAD.

a) TREAD MARKING

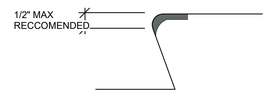

b) ALTERNATE LOCATION

3 STAIR CONTRAST Copy 1
3/4" = 1'-0"

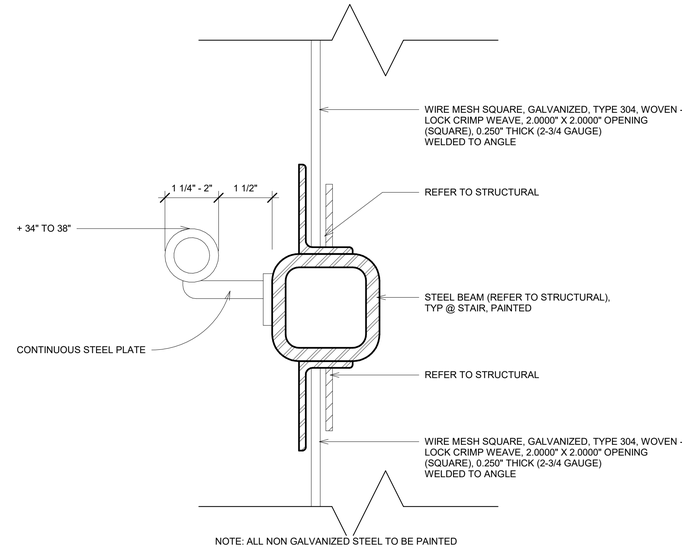

NOTE: ALL NON GALVANIZED STEEL TO BE PAINTED

4 HANDRAIL TO STEEL BEAM
6" = 1'-0"

LICENSED ARCHITECT
AR-986981
KYNDELL M. MADSEN
STATE OF IDAHO
2/24/25

DATE

PHASE 1 PART B FOR:
TWIN FALLS COUNTY - WRIGHT AVE JAIL
2515 Wright Ave, Twin Falls, ID 83301
DETAILS - STAIRS & MESH

Laughlin Ricks Architecture
architecture/planning
134 3RD Ave East * Twin Falls, Idaho 83301
(208) 736-8050

DATE: 2/24/25
KM Drawn
RCR Checked
#23029 PROJECT #

A1B-10.7

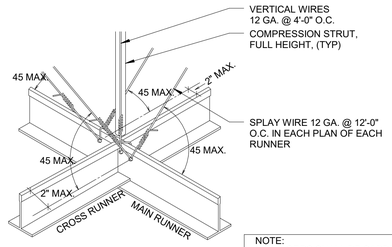

NOTE:
1. HANGERS SHALL BE SADDLE-TIED AROUND MAIN RUNNERS.
2. LOWER ENDS OF FLAT HANGERS SHALL BE BOLTED WITH 3/8" BOLTS TO RUNNER CHANNELS.
3. SPLAY WIRES MUST BE AT 90 DEGREE ANGLES TO EACH ADJACENT WIRE.

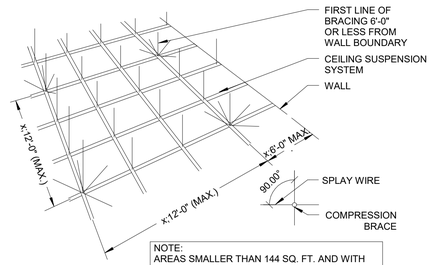

NOTE:
AREAS SMALLER THAN 144 SQ. FT. AND WITH WALLS ON FOUR SIDES EXTENDING TO THE STRUCTURE NEED NOT BE BRACED. NOTE: BOUNDARY WALLS MUST BE BRACED TOP AND BOTTOM INDEPENDENT OF CEILING TO QUALIFY.

1 CEILING DETAILS PH 1B
1" = 1'-0"

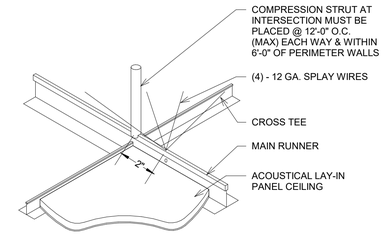

STRUT SIZE	MAXIMUM LENGTH
3/4" DIAMETER CONDUIT (EMT)	8'-6"
1" DIAMETER CONDUIT (EMT)	10'-0"
SINGLE 2 1/2"x20 GA. METAL STUD (Imin = 0.18 in4)	11'-6"
BACK TO BACK 2 1/2"x20 GA. METAL STUDS SCREWED TOGETHER @ 24" O.C.	15'-0"

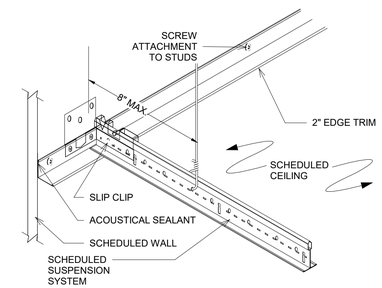

2 CEILING GRID DETAILS PH 1B
3" = 1'-0"

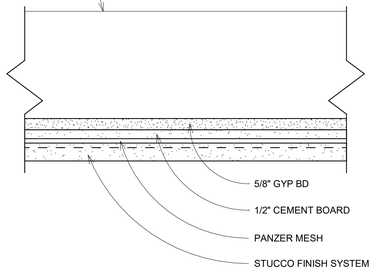

3 SECURITY GYP BD CEILING PH1B
3" = 1'-0"

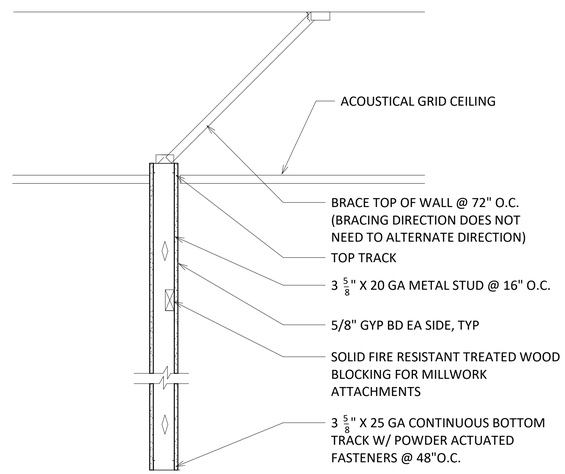

4 PARTITION WALL DETAIL1
1" = 1'-0"

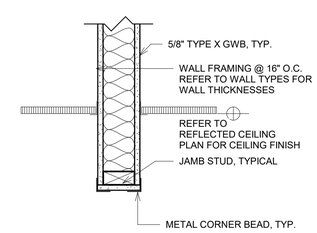

5 BULKHEAD DETAIL
1 1/2" = 1'-0"

LICENSED
ARCHITECT
AR-986981
KYNDELL M. MADSEN
STATE OF IDAHO
2/24/25

DATE

PHASE 1 PART B FOR:
TWIN FALLS COUNTY - WRIGHT AVE JAIL
2515 Wright Ave, Twin Falls, ID 83301
DETAILS - CEILING

Laughlin Ricks Architecture
architecture/planning
134 3RD Ave East, * Twin Falls, Idaho 83301
(208) 736-8050

DATE: 2/24/25
KM Drawn
RCR Checked
#23029 PROJECT #

A1B-10.8

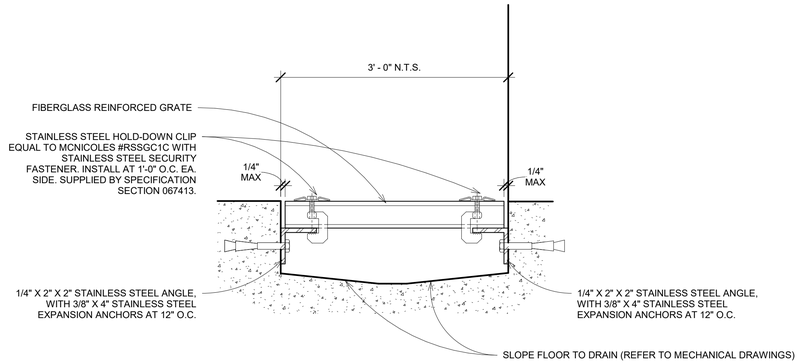

1 GRATE DETAIL
3" = 1'-0"

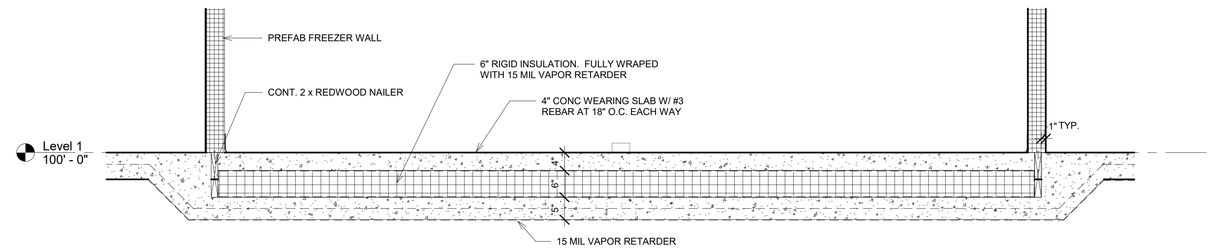

2 Section B6 - Callout 1
3/4" = 1'-0"

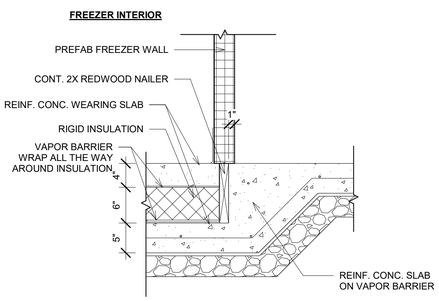

3 FREEZER SLAB @ INT.
1" = 1'-0"

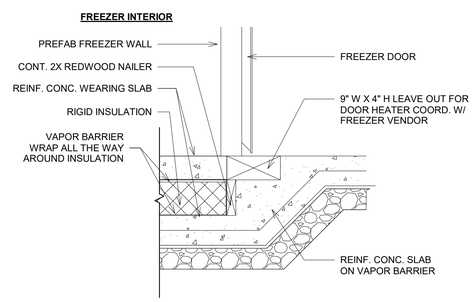

4 FREEZER SLAB DETAIL @ DOOR
1" = 1'-0"

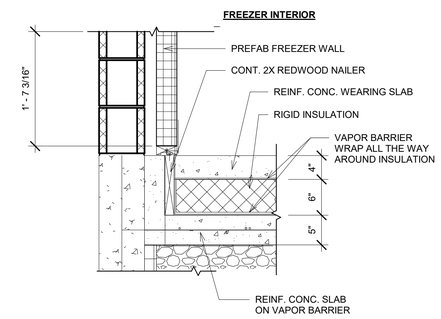

5 FREEZER SLAB DETAIL @ EXT. WALL
1" = 1'-0"

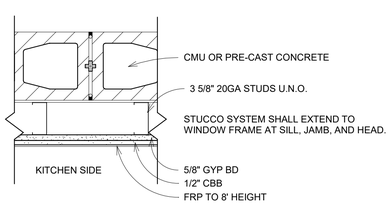

6 KITCHEN FURRING WALL DETAIL
1 1/2" = 1'-0"

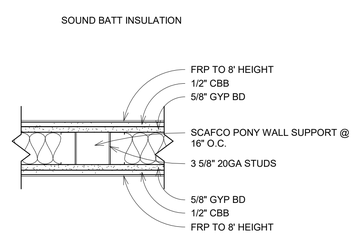

7 KITCHEN PONY WALL DETAIL
1 1/2" = 1'-0"

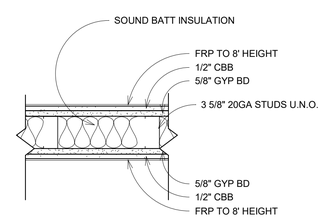

8 KITCHEN WALLS
1 1/2" = 1'-0"

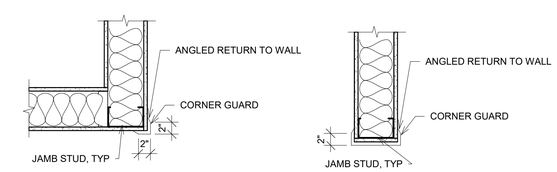

NOTE: CORNER GUARDS @ ALL OUTSIDE CORNERS & ALCOVES ON ANY FRAMED WALL. CORNER GUARD HEIGHTS 5' U.N.O.

9 INTERIOR - CORNER GUARD DETAILS
1" = 1'-0"

LICENSED ARCHITECT AR-986981
KYNDELL M. MADSEN STATE OF IDAHO
2/24/25

DATE

PHASE 1 PART B FOR:
TWIN FALLS COUNTY - WRIGHT AVE JAIL
2516 Wright Ave, Twin Falls, ID 83301
DETAILS - INTERIOR

Laughlin Ricks Architecture
architecture/planning
134 3RD Ave East * Twin Falls, Idaho 83301
(208) 736-8050

DATE: 2/24/25
KM Drawn
RCR Checked
#23029 PROJECT #

A1B-10.9

GENERAL STRUCTURAL NOTES

(APPLY UNLESS NOTED OTHERWISE ON PLANS/DETAILS)

GENERAL REQUIREMENTS:

1. THE STRUCTURAL SYSTEMS AND MEMBERS DEPICTED HEREIN HAVE BEEN DESIGNED PRIMARILY TO SAFEGUARD AGAINST MAJOR STRUCTURAL DAMAGE AND LOSS OF LIFE, NOT TO LIMIT DAMAGE OR MAINTAIN FUNCTION (IBC SECTION 101.3).
2. THESE DRAWINGS, AND THEIR ASSOCIATED STRUCTURAL CALCULATIONS, HAVE BEEN PERFORMED USING STANDARDS OF PROFESSIONAL CARE AND COMPLETENESS NORMALLY EXERCISED UNDER SIMILAR CIRCUMSTANCES BY REPUTABLE STRUCTURAL ENGINEER'S IN THIS OR SIMILAR LOCALITIES. THEY NECESSARILY ASSUME THAT THE WORK DEPICTED WILL BE PERFORMED BY AN EXPERIENCED CONTRACTOR AND/OR WORKMEN WHO HAVE A WORKING KNOWLEDGE OF THE INTERNATIONAL BUILDING CODE CONVENTIONAL FRAMING REQUIREMENTS AND OF INDUSTRY ACCEPTED STANDARD GOOD PRACTICE. AS NOT EVERY CONDITION OR FRAMING ELEMENT IS (OR CAN BE) EXPLICITLY SHOWN ON THESE DRAWINGS, IT IS UNDERSTOOD THAT THE CONTRACTOR WILL USE INDUSTRY ACCEPTED STANDARD GOOD PRACTICE FOR ALL MISCELLANEOUS WORK NOT EXPLICITLY SHOWN.
3. THESE DRAWINGS REPRESENT THE FINISHED STRUCTURE. THEY DO NOT INDICATE THE METHOD OF CONSTRUCTION. THE CONTRACTOR SHALL BE SOLELY RESPONSIBLE FOR CONSTRUCTION MEANS, METHODS, TECHNIQUES, SEQUENCES AND PROCEDURES. CONSTRUCTION MATERIALS SHALL BE SPREAD OUT IF PLACED ON FRAMED CONSTRUCTION SUCH THAT DESIGN LIVE LOAD PER SQUARE FOOT AS STATED HEREIN IS NOT EXCEEDED. OPTIONS ARE FOR CONTRACTOR'S CONVENIENCE. IF AN OPTION IS USED, THE CONTRACTOR SHALL BE RESPONSIBLE FOR ALL NECESSARY CHANGES, AND SHALL COORDINATE ALL DETAILS.
4. WHERE DISCREPANCIES OCCUR BETWEEN PLANS, DETAILS, GENERAL STRUCTURAL NOTES AND SPECIFICATIONS, THE GREATER REQUIREMENTS SHALL GOVERN. TYPICAL DETAILS AND NOTES ARE NOT NECESSARILY INDICATED ON THE PLANS, BUT SHALL APPLY NONE-THE-LESS. WHERE NO DETAILS ARE SHOWN, CONSTRUCTION SHALL CONFORM TO SIMILAR WORK ON THE PROJECT. DETAILS MAY SHOW ONLY ONE SIDE OF CONNECTION OR MAY OMIT INFORMATION FOR CLARITY.
5. ESTABLISH AND VERIFY ALL OPENINGS AND INSERTS FOR ARCHITECTURAL, MECHANICAL, PLUMBING AND ELECTRICAL WITH APPROPRIATE TRADES, DRAWINGS AND SUBCONTRACTORS PRIOR TO CONSTRUCTION. CONTRACTOR SHALL BE RESPONSIBLE FOR VERIFICATION OF ALL DIMENSIONS WITH ARCHITECTURAL DRAWINGS PRIOR TO START OF CONSTRUCTION. RESOLVE ANY DISCREPANCY WITH THE ARCHITECT AND STRUCTURAL ENGINEER.
6. ANY INSPECTIONS, SPECIAL (IBC CHAPTER 17) OR OTHERWISE THAT ARE REQUIRED BY THE BUILDING CODES, LOCAL BUILDING DEPARTMENTS, OR BY THESE PLANS SHALL BE DONE BY AN INDEPENDENT INSPECTION COMPANY OR THE BUILDING DEPARTMENT, SITE VISITS BY THE STRUCTURAL ENGINEER DO NOT CONSTITUTE AN OFFICIAL INSPECTION, UNLESS SPECIFICALLY CONTRACTED FOR.
7. SHOP DRAWINGS SHALL BE SUBMITTED FOR ALL STRUCTURAL ITEMS IN ADDITION TO ITEMS REQUIRED BY ARCHITECTURAL SPECIFICATIONS, THE CONTRACTOR SHALL REVIEW ALL SHOP DRAWINGS PRIOR TO SUBMITTAL. ITEMS NOT IN ACCORDANCE WITH CONTRACT DRAWINGS SHALL BE FLAGGED UPON HIS REVIEW. VERIFY ALL DIMENSIONS WITH ARCHITECT. ANY CHANGES, SUBSTITUTIONS, OR DEVIATIONS FROM ORIGINAL CONTRACT DRAWINGS SHALL BE CLOUDED. ANY OF THE AFOREMENTIONED WHICH ARE NOT CLOUDED OR FLAGGED BY SUBMITTING PARTIES, SHALL NOT BE CONSIDERED APPROVED AFTER THE STRUCTURAL ENGINEER'S REVIEW, UNLESS NOTED ACCORDINGLY. ANY ENGINEERING PROVIDED BY OTHERS AND SUBMITTED FOR REVIEW, SHALL BEAR THE SEAL OF A STRUCTURAL ENGINEER REGISTERED IN THE APPROPRIATE STATE. THE SHOP DRAWINGS DO NOT REPLACE THE ORIGINAL CONTRACT DRAWINGS. ITEMS OMITTED OR SHOWN INCORRECTLY AND ARE NOT FLAGGED BY THE STRUCTURAL ENGINEER ARE NOT TO BE CONSIDERED CHANGES TO ORIGINAL DRAWINGS. THE ADEQUACY OF ENGINEERING DESIGNS AND LAYOUT PERFORMED BY THE OTHERS RESTS WITH THE DESIGNING OR SUBMITTING AUTHORITY. REVIEWING IS INTENDED ONLY AS AN AID TO THE CONTRACTOR IN OBTAINING CORRECT SHOP DRAWINGS. RESPONSIBILITY FOR CORRECTNESS SHALL REST WITH THE CONTRACTOR. ALLOW (5) WORKING DAYS FOR THE STRUCTURAL ENGINEER'S REVIEW. ONE COPY OF EACH SUBMITTAL WILL BE RETAINED FOR THE STRUCTURAL ENGINEER'S RECORDS.

BASIS FOR DESIGN:

1. BUILDING CODE: 2018 EDITION OF THE IBC WITH CITY/COUNTY AMENDMENTS.

   RISK CATEGORY = IV

2. VERTICAL LOADS:

LOCATION	LIVE / SNOW LOAD	DEAD LOAD
ROOF	ROOF = 25 PSF GROUND = 15 PSF	20 PSF (STEEL JOISTS) 140 PSF (32" PRECAST DBL Ts)
FLOOR	40 PSF (CELL BLOCKS) 80 PSF (CORRIDORS AND OFFICE SPACE) 100 PSF (PUBLIC SPACE) 125 PSF (LIGHT STORAGE)	155 PSF (8" PRECAST SLABS) 140 PSF (12" HOLLOWCORE) 85 PSF (CONCRETE OVER STEEL DECK) 110 PSF (24" PRECAST DBL Ts)
BALCONY	60 PSF	20 PSF
STAIRS	100 PSF	50 PSF

3. DEFLECTION LIMITS:

ELEMENTS	LIVE LOAD	TOTAL LOAD
ROOF JOISTS/DBL Ts	L/360	L/240
FLOOR HOLLOWCORE/FLAT SLABS	L/360	L/240
BEAMS	L/360	L/240

4. SEISMIC DESIGN PARAMETERS:

ANALYSIS PROCEDURE	EQUIVALENT LATERAL FORCE PROCEDURE
IMPORTANCE FACTOR	I_e = 1.50
SITE CLASS	D
SEISMIC DESIGN CATEGORY	C
MAPPED SPECTRAL RESPONSE ACCELERATIONS	S_1 = 0.082, S_S = 0.194
DESIGN SPECTRAL RESPONSE ACCELERATIONS	S_{D1} = 0.131, S_{DS} = 0.207
PERCENT OF LIGHT STORAGE LIVE LOAD INCLUDED WITH SEISMIC LOADS	25
VERTICAL SHEAR TRANSFER ELEMENTS:	
INTERMEDIATE PRECAST CONCRETE SHEARWALL(S)	R = 4.0, C_S = 0.078
ORDINARY MASONRY SHEARWALL(S)	R = 2, C_S = 0.155

5. WIND DESIGN PARAMETERS (STRENGTH):

ULTIMATE WIND SPEED	113 MPH (3 SECOND GUST)
WIND EXPOSURE	C
IMPORTANCE FACTOR	I_w = 1.00
INTERNAL PRESSURE COEFFICIENT	-0.18
COMPONENT AND CLADDING PRESSURE	27.1 PSF
NET UPLIFT ON ROOF	21.3 PSF

FOUNDATION NOTES:

1. FOUNDATIONS HAVE BEEN DESIGNED IN CONFORMANCE WITH RECOMMENDATIONS BY: STRATA REPORT NO. TF24135E DATED SEPTEMBER 6, 2024.
2. SITE PREPARATION AND GRADING REQUIREMENTS OF THE SOIL REPORT AND ANY ADDENDUM'S SHALL BE COMPLETED PRIOR TO CONSTRUCTION OF FOUNDATIONS. ANY TESTS OR INSPECTIONS REQUIRED BY THE SOIL REPORT SHALL BE PERFORMED PRIOR TO PLACEMENT OF FOUNDATION REINFORCING STEEL OR CONCRETE. ALTERATIONS TO SITE PREPARATION OR GRADING SHALL BE REPORTED TO THE GEOTECHNICAL ENGINEER PRIOR TO FOUNDATION CONSTRUCTION.

THE SOIL DESIGN VALUES FOR THE FOUNDATION ARE:

ALLOWABLE BEARING PRESSURE	4000 PSF
ALLOWABLE LATERAL BEARING PRESSURE	300 PSF/FT
ALLOWABLE LATERAL SLIDING COEFFICIENT	0.35
LATERAL BACKFILL PRESSURE (UNRESTRAINED)	37 PSF/FT
LATERAL BACKFILL PRESSURE (RESTRAINED)	62 PSF/FT

3. A 30% INCREASE IN BEARING PRESSURES IS ALLOWED WITH SEISMIC OR WIND LOAD COMBINATIONS. LATERAL BEARING AND LATERAL SLIDING RESISTANCE MAY BE COMBINED.

FOUNDATION BEARING DEPTH
24" BELOW FINISHED GRADE

4. ALL FOUNDATIONS SHALL BEAR ON A MIN. OF 5'-0" OF OVER-EXCAVATED AND RE-COMPACTED GRANULAR STRUCTURAL FILL COMPACTED TO 95% DRY DENSITY (MODIFIED PROCTOR). ALL OVER-EXCAVATIONS SHOULD EXTEND 1 FOOT LATERALLY BEYOND THE IMPROVEMENT AREA FOR EVERY 2 FEET OF EXCAVATION DEPTH. CONCRETE FOOTING EXCAVATIONS SHALL BE CLEAN AND FREE OF LOOSE DEBRIS OR UN-COMPACTED MATERIAL AT TIME OF CONCRETE PLACEMENT.
5. GRADE IS DEFINED AS LOWEST ADJACENT GRADE WITHIN 5 FEET OF THE BUILDING FOR PERIMETER FOOTINGS. WHERE EXTERIOR PAVING OR CONCRETE IS DIRECTLY ADJACENT TO BUILDING, GRADE IS DEFINED AS TOP OF EXTERIOR PAVING AT LEAST 5 FEET FROM BUILDING.
6. CONCRETE SLABS ON GRADE SHALL BE SUPPORTED ON A 6 INCH (MIN) LAYER OF FREE-DRAINING GRANULAR MAT (DRAINAGE FILL COURSE). THE MAT SHOULD CONSIST OF A WELL GRADED SAND AND GRAVEL MIXTURE WITH MAXIMUM 3/4-INCH CRUSHED AGGREGATE. THE GRANULAR MAT SHOULD BE COMPACTED TO NO LESS THAN 95% OF THE MAXIMUM DRY DENSITY (MODIFIED PROCTOR) THE SUBGRADE BELOW GRANULAR MAT SHOULD BE PROOF-ROLLED AND ANY SOFT OR LOOSE AREAS REMOVED AND REPLACED WITH GRANULAR STRUCTURAL FILL. PROVIDE A VAPOR BARRIER WHERE REQUIRED PER ARCHITECTURAL DRAWINGS.

REINFORCING STEEL:

1. ASTM A615 GRADE 60 (FY = 60 KSI) DEFORMED BARS FOR ALL BARS
2. WELDING OF REINFORCING BARS SHALL BE MADE ONLY TO ASTM A706 GRADE 60 BARS AND ONLY USING E90 SERIES RODS. WELDING OF REINFORCING BARS SHALL BE MADE ONLY AT LOCATIONS SHOWN ON PLANS OR DETAILS.
3. REINFORCING BAR SPACING GIVEN ARE MAXIMUM ON CENTERS. ALL BARS PER CRSI SPECIFICATIONS AND HANDBOOK. DOWEL ALL VERTICAL REINFORCING TO FOUNDATION. SECURELY TIE ALL BARS IN LOCATION BEFORE PLACING CONCRETE.

STEEL:

1. MATERIALS: ROLLED W SHAPES, SHALL CONFORM TO ASTM A992 (FY=50 KSI). ALL OTHER STRUCTURAL STEEL SHAPES, ROLLED SECTIONS, BARS AND PLATES SHALL CONFORM TO ASTM A36 (FY = 36 KSI). ALL PIPE STEEL SHALL BE ASTM A501 (FY = 36 KSI) OR ASTM A53, TYPE E OR S, GRADE B (FY = 35 KSI). ALL TUBULAR STEEL SHALL BE ASTM A500 GRADE C (FY = 50 KSI).
2. ALL BOLTS AND STUDS SHALL BE ASTM A307, UNLESS NOTED OTHERWISE. ALL EXPANSION BOLTS TO HAVE CURRENT ICC REPORT RATING FOR MATERIAL INTO WHICH INSTALLATION TAKES PLACE. HEADED STUDS SHALL CONFORM TO ALL REQUIREMENTS OF THE LATEST EDITION OF THE "RECOMMENDED PRACTICES FOR STUD WELDING" AND THE "STRUCTURAL WELDING CODE" PUBLISHED BY AWS. ALL BOLTS, ANCHOR BOLTS, EXPANSION BOLTS, ETC. SHALL BE INSTALLED WITH STEEL WASHERS AT FACE OF WOOD OR AT SLOTTED HOLES IN STEEL SECTIONS.
3. ALL STRUCTURAL AND MISCELLANEOUS STEEL SHALL BE FABRICATED AND ERECTED IN ACCORDANCE WITH AISC SPECIFICATIONS FOR THE DESIGN, FABRICATION AND ERECTION OF STRUCTURAL STEEL FOR BUILDINGS, LATEST EDITION.
4. WELDING SHALL BE BY WELDERS HOLDING VALID CERTIFICATES AND HAVING CURRENT EXPERIENCE IN THE TYPE OF WELD SHOWN ON THE DRAWINGS OR NOTES. ALL WELDING SHALL USE E70 SERIES LOW HYDROGEN RODS UNLESS NOTED OTHERWISE. ALL WELDING PER LATEST AMERICAN WELDING SOCIETY STANDARDS. ALL WELDS ON DRAWINGS ARE SHOWN AS SHOP WELDS. CONTRACTOR MAY SHOP WELD OR FIELD WELD AT HIS DISCRETION. ALL FULL PENETRATION WELDS SHALL BE TESTED AND CERTIFIED BY AN INDEPENDENT TESTING LABORATORY.
5. STEEL TO STEEL BOLTED CONNECTIONS: HIGH STRENGTH BOLTS SHALL BE ASTM A325N AND SHALL BE INSTALLED AS BEARING-TYPE CONNECTIONS WITH THREADS INCLUDED IN SHEAR PLANE (TYPE "N" CONNECTION UNLESS NOTED OTHERWISE). BOLTS MAY BE TIGHTENED USING ANY AISC APPROVED METHOD.
6. DRYPACK SHALL BE 5,000 PSI FIVE STAR NON-SHRINK GROUT OR EQUIVALENT. INSTALL DRYPACK UNDER BEARING PLATES BEFORE FRAMING MEMBER IS INSTALLED. AT COLUMNS, INSTALL DRYPACK UNDER BASE PLATES AFTER COLUMN HAS BEEN PLUMBED BUT PRIOR TO FLOOR OR ROOF INSTALLATION.

CONCRETE:

1. MINIMUM 28 DAY CONCRETE STRENGTH SHALL BE AS FOLLOWS:

USE:	CONCRETE STRENGTH:	MAX W/C RATIO	AIR ENTRAINMENT
FOOTINGS	4000 PSI	0.50	5.5% ± 1%
FOUNDATION WALLS	4500 PSI	0.45	5.5% ± 1%
INTERIOR CONCRETE SLABS ON GRADE, TOPPING SLABS, AND SLAB OVER STEEL DECK	4500 PSI	0.45	N/A
EXTERIOR CONCRETE SLABS ON GRADE	4500 PSI	0.45	5.5% ± 1%

2. ALL NORMAL WEIGHT CONCRETE SHALL BE REGULAR WEIGHT OF 150 POUNDS PER CUBIC FOOT USING HARD ROCK AGGREGATES. AGGREGATE USED IN CONCRETE SHALL CONFORM TO ASTM C33.
3. LAP SPLICES FOR BEAMS AND FLOOR SLABS SLABS SHALL BE ACCORDING TO CHAPTER 12 OF ACI 318 OR LAP SCHEDULE ON THESE DRAWINGS.

   STAGGER SPLICES A MINIMUM OF ONE LAP LENGTH. NO TACK WELDING OF REINFORCING BARS ALLOWED WITHOUT PRIOR REVIEW OF PROCEDURE WITH THE STRUCTURAL ENGINEER. LATEST ACI CODE AND DETAILING MANUAL APPLY. PROVIDE BENT CORNER BARS TO MATCH AND LAP WITH HORIZONTAL BARS AT ALL CORNERS AND INTERSECTIONS PER TYPICAL DETAILS. VERTICAL WALL BARS SHALL BE SPLICED AT OR NEAR FLOOR LINES.
4. ALL DIMENSIONS SHOWING THE LOCATION OF REINFORCING STEEL NOT NOTED AS "CLEAR" OR "CLR" ARE TO CENTER OF STEEL. MINIMUM COVER FOR NON-PRESTRESSED CONCRETE REINFORCING SHALL BE AS FOLLOWS:

LOCATION:	MINIMUM COVER	TOLERANCE
CAST AGAINST EARTH (FOOTINGS)	3"	± 3/8"
SLABS ON GRADE	1 1/2"	± 1/4"
EXPOSED TO EARTH OR WEATHER - #5 AND SMALLER	1 1/2"	± 3/8"
EXPOSED TO EARTH OR WEATHER - #6 AND LARGER	2"	± 3/8"
NOT EXPOSED TO WEATHER OR IN CONTACT WITH THE GROUND ROOF SLAB	1"	1/8"
STRUCTURAL SLABS AND WALLS	3/4"	1/8"
BEAMS AND COLUMNS (PRIMARY) REINFORCEMENT, TIES, STIRRUPS AND SPIRALS	1 1/2"	3/8"

5. MAXIMUM SLUMP FOR ALL CONCRETE SHALL BE 4" UNLESS A WATER REDUCER OR PLASTICIZER IS USED. PORTLAND CEMENT SHALL CONFORM TO ASTM C595 AND BE TYPE 1L.
6. NO MORE THAN 90 MINUTES SHALL ELAPSE BETWEEN CONCRETE BATCHING AND CONCRETE PLACEMENT UNLESS APPROVED BY THE TESTING AGENCY.
7. CONCRETE PLACEMENT AND QUALITY SHALL BE PER RECOMMENDATIONS IN ACI 614, ACI 301 AND ACI 318. MECHANICALLY VIBRATE ALL CONCRETE WHEN PLACED, EXCEPT THAT SLABS ON GRADE NEED BE VIBRATED ONLY AROUND AND UNDER FLOOR DUCTS, ETC. CAST CLOSURE POUR, WHERE SHOWN ON PLANS AROUND COLUMNS AFTER COLUMN DEAD LOAD IS APPLIED. REMOVE ALL DEBRIS FROM FORMS BEFORE PLACING CONCRETE.

   ALL ITEMS TO BE CAST IN CONCRETE SUCH AS REINFORCING, DOWELS, BOLTS, ANCHORS, PIPES, SLEEVES, ETC., SHALL BE SECURELY POSITIONED IN THE FORMS BEFORE PLACING THE CONCRETE.
8. ALL CONCRETE SLABS ON GRADE SHALL BE DIVIDED INTO AREAS BY CONTROL JOINTS (KEYED OR SAW CUT) SUCH THAT ONE SLAB AREA DOES NOT EXCEED A MAXIMUM LENGTH OF 36 TIMES THE SLAB THICKNESS IN BOTH DIRECTIONS (EXAMPLE: 4" SLAB = 12'-0" LENGTH). SQUARE LAYOUTS ARE PREFERRED, BUT THE SLAB GEOMETRY MAY DICTATE OTHERWISE. THE RATIO OF THE LONG TO SHORT DISTANCE SHALL NOT EXCEED 1.3. IT IS RECOMMENDED THAT SAW CUTS BE MADE WITHIN 16 HOURS OF CONCRETE BATCHING.

   KEYED CONTROL JOINTS NEED ONLY OCCUR AT EXPOSED EDGES DURING POURING, ALL OTHER JOINTS MAY BE SAW CUT.
9. HORIZONTAL PIPES AND ELECTRICAL CONDUITS SHALL NOT BE EMBEDDED IN STRUCTURAL CONCRETE AND SLABS ON GRADE EXCEPT WHERE SPECIFICALLY APPROVED OR NOTED BY THE STRUCTURAL ENGINEER. PIPES AND CONDUITS SHALL NOT IMPAIR THE STRENGTH OF THE WORK.
10. CEMENTITIOUS MATERIALS SHALL CONFORM TO THE FOLLOWING TABLE.

SUPPLEMENTARY CEMENTITIOUS MATERIALS:	MAX % BY MASS
FLY ASH OR NATURAL POZZOLANS CONFORMING TO ASTM C618	25
SLAG CEMENT CONFORMING TO ASTM C989	50
SILICA FUME CONFORMING TO ASTM C1240	10
TOTAL OF FLY ASH OR NATURAL POZZOLANS AND SILICA FUME	10
TOTAL OF FLY ASH OR NATURAL POZZOLANS, SLAG CEMENT, AND SILICA FUME	50

11. COLD/HOT WEATHER CONCRETE CONSTRUCTION: PROTECT CONCRETE FROM DAMAGE OR REDUCED STRENGTH IN COMPLIANCE WITH ACI 305 AND 306.
12. CONCRETE MIXES SHALL BE DESIGNED BY A CERTIFIED LABORATORY AND APPROVED BY THE STRUCTURAL ENGINEER.
13. LIMIT ALKALI-SILICA REACTION (ASR) TO 0.1% EXPANSION AT 28 DAYS IN CONCRETE MIX AT ALL EXTERIOR CONCRETE AND INTERIOR CONCRETE EXPOSED TO MOISTURE.
14. PRIOR TO ERECTING ANY PRECAST CONCRETE, THE SUPPORTING CAST-IN-PLACE CONCRETE SHALL HAVE CURED FOR AT LEAST 7 DAYS AND REACHED A MINIMUM COMPRESSION STRENGTH OF 3,000 PSI.

MASONRY (CONCRETE BLOCK):

MINIMUM 28 DAY MASONRY STRENGTH SHALL BE 2000 PSI.

MASONRY COMPRESSIVE STRENGTH: NET COMPRESSIVE STRENGTH OF THE OVERALL MASONRY SYSTEM (MORTAR, UNITS, AND GROUT) SHALL BE f'M=2,000 PSI (BY UNIT STRENGTH METHOD)

1. VERTICAL REINFORCING: PROVIDE AS REQUIRED PER PLAN AND SCHEDULE. REINFORCING TO BE FULL HEIGHT OF WALL. CENTERED IN GROUTED CELL, UNO. PROVIDE A MINIMUM OF ONE FULL-HEIGHT BAR AT ALL WALL INTERSECTIONS, CORNERS, WALL ENDS, JAMBS, COLUMN CORNERS AND EACH SIDE OF CONTROL JOINTS, UNO ON PLANS/DETAILS. TIE AT 8'-0" VERTICALLY, WITH SINGLE WIRE LOOP TIE OR EQUIVALENT. DOWEL ALL REINFORCING TO FOUNDATION WITH DOWELS TO MATCH AND LAP VERTICAL WALL OR COLUMN REINFORCING.
2. CONTROL JOINTS: UNLESS NOTED OTHERWISE ON THE PLANS, PLACE CONTROL JOINTS IN MASONRY WALLS SUCH THAT NO STRAIGHT RUN OF WALL EXCEEDS 24'-0". CONTROL JOINTS SHALL NOT OCCUR AT WALL CORNERS, INTERSECTIONS, ENDS, WITHIN 24" OF CONCENTRATED POINTS OF BEARING OR JAMBS, OR OVER OPENINGS UNLESS SPECIFICALLY SHOWN ON THE STRUCTURAL DRAWINGS.
3. HORIZONTAL REINFORCING: PROVIDE AS REQUIRED PER PLAN AND SCHEDULE. (MINIMUM UNLESS NOTED OTHERWISE ON PLANS/DETAILS) ONE #5 BAR IN TOP AND BOTTOM OF 16 INCH DEEP CONTINUOUS GROUTED BOND BEAM AT ELEVATED FLOOR AND ROOF LINES.

   HORIZONTAL BARS AT TOP OF PARAPET OR FREE STANDING WALLS SHALL BE ONE #5 BAR IN CENTER OF 8 INCH DEEP CONTINUOUS GROUTED BOND BEAM.

   BOND BEAM REINFORCING AT FLOOR, ROOF OR TOP OF WALL SHALL RUN CONTINUOUS THROUGH CONTROL JOINTS, UNO. PROVIDE BENT BARS PER TYPICAL DETAILS, TO MATCH HORIZONTAL BOND BEAM REINFORCING, AT CORNERS AND WALL INTERSECTION TO MAINTAIN BOND BEAM CONTINUITY.
4. TENSION LAP SPLICES OF REINFORCING STEEL IN MASONRY SHALL BE AS FOLLOWS:

REBAR SIZE	STANDARD LAP	RETAINING WALLS (AT FACE OF WALL)
#4	24"	30"
#5	30"	46"
#6	43"	55"
#7	60"	64"
#8	72"	72"

5. REINFORCING PLACEMENT TOLERANCES: ALL DIMENSIONS SHOWING THE LOCATION OF REINFORCING STEEL NOT NOTED AS "CLEAR" OR "CLR" ARE TO CENTER OF STEEL. TOLERANCES FOR PLACEMENT OF VERTICAL REINFORCING SHALL BE (±) 1/2" PERPENDICULAR TO WALL AND (±) 2" ALONG THE LENGTH OF THE WALL. PROVIDE 1/2" CLEARANCE BETWEEN MASONRY UNITS AND REINFORCING, AND REINFORCING RUNNING IN THE SAME DIRECTION. LAPS MAY BE BESIDE OR OVER THE REINFORCING BEING SPLICED.
6. BLOCK QUALITY: CONCRETE BLOCK SHALL BE MEDIUM WEIGHT LOAD-BEARING CONCRETE MASONRY UNITS CONFORMING TO ASTM C90 WITH A MINIMUM COMPRESSIVE STRENGTH OF 2000 PSI. USE BOND BEAM UNITS AT HORIZONTAL REINFORCING.
7. MORTAR: MORTAR MIX SHALL CONFORM TO REQUIREMENTS OF THE ASTM C270 AND ASTM C780 STANDARDS, TYPE M OR S.
8. GROUT: GROUT SHALL CONFORM TO REQUIREMENTS OF ASTM C476. USE SUFFICIENT WATER FOR GROUT TO FLOW INTO ALL JOINTS OF THE MASONRY WITHOUT SEGREGATION. GROUT SHALL ATTAIN A MINIMUM COMPRESSIVE STRENGTH OF 2500 PSI AT 28 DAYS. ALL CELLS IN CONCRETE BLOCKS CONTAINING REINFORCING SHALL BE FILLED SOLID WITH GROUT. ALL MASONRY BELOW FINISHED FLOOR OR GRADE SHALL BE GROUTED SOLID. ALL GROUT SHALL BE MECHANICALLY VIBRATED.

   GROUT LIFTS OF 5 FEET OR LESS IS RECOMMENDED. FOR HIGHER GROUT LIFTS, CLEANOUTS (3"x3") AT THE BOTTOM OF ALL VERTICALLY REINFORCED CELLS SHALL BE PROVIDED. IN ADDITION, MECHANICAL DEVICES SHALL BE USED TO POSITION AND SECURE REINFORCING WHEN GROUT LIFTS EXCEED 5 FEET IN HEIGHT. IN SOLID GROUTED MASONRY, CLEANOUTS SHALL NOT BE SPACED MORE THAN 32" O.C.
9. BLOCK CONSTRUCTION: ALL BLOCKS SHALL BE PLACED IN RUNNING BOND CONSTRUCTION (UNLESS OTHERWISE NOTED) WITH ALL VERTICAL CELLS IN ALIGNMENT.
10. LINTELS: FULLY GROUT FOR THE DEPTH SPECIFIED ON PLANS/DETAILS. LINTELS SHALL BE SUPPORTED ON FULLY GROUTED MASONRY. BEARING SHALL NOT BE LESS THAN THE SPECIFIED JAMB LENGTH OR 8" MINIMUM. EXTEND LINTEL REINFORCING FOR A MINIMUM OF 2'-0" BEYOND THE OPENING OR PROVIDE STANDARD HOOK, SEE TYPICAL MASONRY DETAILS FOR ADDITIONAL INFORMATION.
11. PROVIDE 9 GA. GALVANIZED (ASTM A153) HORIZONTAL JOINT REINFORCEMENT, CONFORMING TO ASTM A951. PLACE IN WALLS AT 16" O.C. VERTICALLY, UNO. PROVIDE HORIZONTAL JOINT REINFORCEMENT IN BOND BEAMS AT 8" O.C. VERTICALLY. LAP JOINT REINFORCEMENT 6" MINIMUM. JOINT REINFORCEMENT MAY BE LADDER OR TRUSS TYPE.

STEEL DECKING:

1. PROTECT STEEL DECK FROM CORROSION, DEFORMATION, AND OTHER DAMAGE DURING DELIVERY, STORAGE AND HANDLING.

   IF GROUND STORAGE IS NEEDED, THE DECK BUNDLES MUST BE STORED OFF THE GROUND, WITH ONE END ELEVATED TO PROVIDE DRAINAGE. BUNDLES MUST BE PROTECTED AGAINST CONDENSATION WITH A VENTILATED WATERPROOF COVERING. BUNDLES MUST BE STACKED SO THERE IS NO DANGER OF TIPPING, SLIDING, ROLLING, SHIFTING OR MATERIAL DAMAGE. BUNDLES MUST BE PERIODICALLY CHECKED FOR TIGHTNESS, AND RETIGHTENED AS NECESSARY.

   DECK BUNDLES PLACED ON THE BUILDING FRAME MUST BE PLACED NEAR A MAIN SUPPORTING BEAM AT A COLUMN OR WALL. IN NO CASE ARE THE BUNDLES TO BE PLACED ON UNBOLTED FRAMES OR ON UNATTACHED AND/OR UNBRIDGED JOISTS. THE STRUCTURAL FRAME MUST BE PROPERLY BRACED TO RECEIVE THE BUNDLES.
2. EXAMINE SUPPORT FRAMING AND FIELD CONDITIONS FOR COMPLIANCE WITH REQUIREMENTS FOR INSTALLATION TOLERANCES AND OTHER CONDITIONS AFFECTING PERFORMANCE OF WORK OF THIS SECTION. ALL OSHA RULES FOR ERECTION MUST BE FOLLOWED.

   PLACE DECK IN ACCORDANCE WITH APPROVED INSTALLATION DRAWINGS.

   LOCATE DECK BUNDLES TO PREVENT OVERLOADING OF SUPPORT MEMBERS.

   INSTALL DECK PANELS AND ACCESSORIES ACCORDING TO ANSI/SDI RD - 2010 AND IN ACCORDANCE WITH APPROVED INSTALLATION DRAWINGS AND REQUIREMENTS OF THIS SECTION.

   PLACE DECK PANELS ON STRUCTURAL SUPPORTS AND ADJUST TO FINAL POSITION WITH ENDS ALIGNED. ATTACH FIRMLY TO THE SUPPORTS INNEDIATELY AFTER PLACEMENT IN ORDER TO FORM A SAFE WORKING PLATFORM.

   CUT AND NEATLY FIT DECK UNITS AND ACCESSORIES AROUND OPENINGS AND OTHER WORK PROJECTING THROUGH OR ADJACENT TO THE DECKING.

   TRADES THAT SUBSEQUENTLY CUT UNSCHEDULED OPENINGS THROUGH THE DECK ARE RESPONSIBLE FOR REINFORCING THE OPENINGS.

   BEFORE PLACEMENT OF ROOF INSULATION AND ROOF COVERING, THE DECK SHALL BE INSPECTED FOR TEARS, DENTS OR OTHER DAMAGE THAT MAY PREVENT THE DECK FROM ACTING AS A STRUCTURAL ROOF BASE. THE NEED FOR REPAIR OF DAMAGED DECK SHALL BE DETERMINED BY THE ENGINEER OF RECORD BASED ON STRUCTURAL PERFORMANCE, UNLESS AESTHETICS HAVE BEEN SPECIFICALLY ADDRESSED IN THE CONTRACT DOCUMENTS.

   DO NOT USE DECK UNITS AS A WORKING PLATFORM OR STORAGE AREA UNTIL UNITS ARE IN POSITION AND PERMANENTLY ATTACHED TO THE STRUCTURE.

   CONSTRUCTION LOADS MUST NOT EXCEED LOAD CARRYING CAPACITY OF THE DECK.

   MATERIALS: GRADE 50 STEEL, G60 GALVANIZED

DEFERRED SUBMITTAL ITEMS:

1. ITEMS LISTED AS DEFERRED SUBMITTALS TO BE DOCUMENTED WITH CALCULATIONS AND CONSTRUCTION DETAIL. DOCUMENTS TO BE STAMPED AND SIGNED BY THE DESIGN PROFESSIONAL RESPONSIBLE FOR THE DESIGN, WHO IS TO BE LICENSED BY THE STATE WHERE THE PROJECT IS LOCATED. DOCUMENTS TO BE REVIEWED BY ENGINEER OF RECORD WHO IS TO MARK THE DOCUMENTS VERIFYING THE REVIEW. DOCUMENTS TO BE PROVIDED TO THE CITY BUILDING OFFICIAL AFTER REVIEW BY ENGINEER OF RECORD.
2. THE FOLLOWING ITEMS WILL BE DEFERRED SUBMITTAL ITEMS FOR THIS PROJECT:

- PREFABRICATED STEEL ROOF JOISTS
- PRECAST CONCRETE DBL Ts, WALLS, HOLLOWCORE PLANKS, AND SOLID SLABS

SYMBOLS LEGEND

(NOT ALL SYMBOLS NECESSARILY APPLY TO THIS PROJECT)

- INDICATES CONTROL JOINT (C.C.J.) IN CONCRETE SLAB. (ORANGE)
- INDICATES LOCATION AND LENGTH OF EXTRA REBAR BUNDLES IN SLABS. (BLUE)
- WALLS WITH SOLID LINES DESIGNATE STRUCTURAL (BEARING) WALLS.
- WALLS WITH DASHED LINES DESIGNATE NON-STRUCTURAL (NON-BEARING) MASONRY WALLS.
- WALLS WITH HATCH DESIGNATE BEARING MASONRY WALLS.
- RME XXX# — INDICATES HVAC EQUIPMENT ON ROOF OR IN ATTIC SPACE. SEE TYPICAL DETAILS FOR FRAMING INFORMATION.
- SCX — SC1, SC2, ETC. - AS SHOWN ON PLAN INDICATES A STEEL COLUMN. SEE STEEL COLUMN SCHEDULE FOR ADDITIONAL INFORMATION. COLUMNS START AT THE LEVEL THEY ARE CALLED OUT ON.

ABBREVIATIONS

A.B.C.	AGGREGATE BASE COURSE	GT	GIRDER TRUSS
A/C	AIR CONDITIONER	I.F.W.	INSIDE FACE OF WALL
A.F.F.	ABOVE FINISHED FLOOR	HORIZ.	HORIZONTAL
ALT.	ALTERNATE	K(KIP)	1000 POUNDS
A.B.	ANCHOR BOLT	L.L.	LIVE LOAD
@	AT (MEASUREMENT)	LBS (#)	POUNDS
BM	BEAM	LLH	LONG LEG HORIZONTAL
B.F.F	BELOW FINISHED FLOOR	LLV	LONG LEG VERTICAL
B.O.B.	BOTTOM OF BEAM	MIN.	MINIMUM
B.O.D.	BOTTOM OF DECK	MAX.	MAXIMUM
B.O.F.	BOTTOM OF FOOTING	MFR('S)	MANUFACTURER('S)
BRG	BEARING	M.C.J.	MASONRY CONTROL JOINT
C.I.P.	CAST IN PLACE	MECH'L.	MECHANICAL
C.L.	CENTERLINE	N/A	NOT APPLICABLE
C.L.B.	CENTERLINE OF BEAM	N.T.S.	NOT TO SCALE
C.L.C.	CENTERLINE OF COLUMN	O.C.	ON CENTER
C.L.F.	CENTERLINE OF FOOTING	O.F.W.	OUTSIDE FACE OF WALL
C.L.W.	CENTERLINE OF WALL	OPP.	OPPOSITE
CLR	CLEAR	P.C.	PRECAST CONCRETE
CONC	CONCRETE	PLF	POUNDS PER LINEAR FOOT
C.C.J.	CONCRETE CONTROL JOINT	PREFAB	PREFABRICATED
C.S.J.	CONCRETE SAWCUT JOINT	PSF	POUNDS PER SQUARE FOOT
C.M.U.	CONCRETE MASONRY UNIT	PSI	POUNDS PER SQUARE INCH
CONN.	CONNECTION	REINF.	REINFORCING
CONT.	CONTINUOUS	SLH	SHORT LEG HORIZONTAL
D.L.	DEAD LOAD	SLV	SHORT LEG VERTICAL
ø OR DIA.	DIAMETER	SIM.	SIMILAR
DN.	DOWN	SQ.	SQUARE
DWG(S)	DRAWING(S)	STD	STANDARD
E.O.S.	EDGE OF SLAB	T.L.	TOTAL LOAD
EQ.	EQUAL	T.O.B.	TOP OF BEAM
EQUIP.	EQUIPMENT	T.O.D.	TOP OF DECK
EXP. BOLT	EXPANSION BOLT	T.O.F.	TOP OF FOOTING
EXP. JT (E.J.)	EXPANSION JOINT	T.O.L.	TOP OF LEDGER
(E)	EXISTING	T.O.M.	TOP OF MASONRY
E.W.	EACH WAY	T.O.P.	TOP OF PLATE
F.F.	FINISHED FLOOR	T.O.S.	TOP OF STEEL
F.O.M.	FACE OF MEMBER	T.O.W.	TOP OF WALL
F.O.S.	FACE OF STEEL	TYP.	TYPICAL
F.O.W.	FACE OF WALL	U.N.O.	UNLESS NOTED OTHERWISE
GA.	GAUGE	VERT	VERTICAL
GALV.	GALVANIZED	W.W.F.	WELDED WIRE FABRIC
GSN	GENERAL STRUCTURAL NOTES	W/	WITH
GLB (GLULAM)	GLUED-LAMINATED BEAM	W/O	WITHOUT

SHEET INDEX

SHEET	DESCRIPTION	DETAILS
S1B-1.0	GENERAL STRUCTURAL NOTES	---
S1B-1.1	GENERAL STRUCTURAL NOTES	---
S1B-1.2	TYPICAL DETAILS	T - SERIES
S1B-1.3	TYPICAL DETAILS	T - SERIES
S1B-1.4	TYPICAL DETAILS	
S1B-2.0	FOUNDATION PLAN	---
S1B-2.1	MEZZANINE FLOOR AND LOW ROOF FRAMING PLAN	---
S1B-2.2	ROOF FRAMING PLAN	---
S1B-2.3	CONTROL ROOM FLOOR FRAMING AND FOUNDATION PLANS	---
S1B-3.0	FOUNDATION DETAILS	100 - SERIES
S1B-3.1	FOUNDATION DETAILS	100 - SERIES
S1B-4.0	FLOOR FRAMING DETAILS	200 - SERIES
S1B-4.1	FLOOR FRAMING DETAILS	200 - SERIES
S1B-5.0	ROOF FRAMING DETAILS	300 - SERIES
S1B-5.1	ROOF FRAMING DETAILS	
S1B-5.2	ROOF FRAMING DETAILS	
S1B-6.0	ROOF AND FLOOR LOADING KEY PLANS	---

This drawing is the property of Ridge Structural Engineering, Inc. Legally, the drawing can NOT be copied in whole or in pieces. It is only to be used for the project and site specifically identified hereon and is not to be used on any other project. Contractor shall carefully review all dimensions, details, and conditions and report at once any error, inconsistency or omission discovered before construction. The contractor assumes full liability for deviations from the intent of these plans.

JOB NO.: 24.145 | PROJECT MANAGER: KBB | CAD OPERATOR: GTC

Ridge Structural Engineering
1152 Bond Avenue, Suite B
Rexburg, ID 83440
phone: 208.227.8404
contact@ridgestructural.com

PROFESSIONAL ENGINEER — LICENSED — 14134 — STATE OF IDAHO — DAVID B. PORTER
03/17/2025

DATE

PHASE 1 PART B FOR:
TWIN FALLS COUNTY - WRIGHT AVE JAIL
2515 Wright Ave, Twin Falls, ID 83301
GENERAL STRUCTURAL NOTES

Laughlin Ricks Architecture
architecture/planning
134 3RD Ave East, * Twin Falls, Idaho 83301
(208) 736-8050

DATE: 03/17/2025

GTC — Drawn
KBB — Checked
24-145 — PROJECT #

S1B-1.0

STEEL JOISTS AND JOIST GIRDERS:

1. SPECIFICATIONS: ALL JOISTS SHALL BE DESIGNED, FABRICATED, WELDED AND ERECTED IN ACCORDANCE WITH THE LATEST EDITION OF THE "STANDARD SPECIFICATIONS" OF THE STEEL JOIST INSTITUTE.

2. JOIST DESIGN: JOIST MANUFACTURER SHALL DESIGN AND SUBMIT CALCULATIONS BY A REGISTERED ENGINEER FOR ALL JOISTS, EXCEPT PARALLEL CHORD JOISTS WITH UNIFORM LOADS AND CONTINUOUSLY SUPPORTED COMPRESSION CHORDS PER SJI STANDARD LOAD TABLES.

   GIRDER DESIGN: JOIST MANUFACTURER SHALL DESIGN AND SUBMIT CALCULATIONS BY A REGISTERED ENGINEER FOR ALL JOIST GIRDERS.

3. CALCULATIONS: CALCULATIONS SHALL INCLUDE DEFLECTION AND CAMBER REQUIREMENTS. LIVE LOAD DEFLECTIONS SHALL BE LIMITED TO SPAN/360. TOTAL LOAD DEFLECTIONS SHALL BE LIMITED TO SPAN/240. ALL JOISTS AND JOIST GIRDERS SHALL BE CAMBERED FOR THE DESIGN DEAD LOAD. MANUFACTURER SHALL ADD ADDITIONAL WEB MEMBERS AS REQUIRED AND ADJUST CHORD AND WEB SIZES ACCORDINGLY, BUT SHALL NOT ALTER DEPTH OF JOISTS. DESIGN CALCULATIONS SHALL INCLUDE SUPERIMPOSED LOADS FOR FRAMING SUPPORTED EQUIPMENT. VERIFY SIZE, WEIGHT AND LOCATION OF EQUIPMENT WITH ARCHITECTURAL, MECHANICAL, PLUMBING AND ELECTRICAL DRAWINGS.

4. SHOP DRAWINGS: CONTRACTOR SHALL SUBMIT SHOP DRAWINGS FOR REVIEW PRIOR TO MANUFACTURE. CONTRACTOR SHALL SUBMIT DESIGN CALCULATIONS SEALED BY A REGISTERED ENGINEER FOR REVIEW PRIOR TO INSTALLATION. SHOP DRAWINGS AND CALCULATIONS SHALL INCLUDE DETAILS OF OPTIONAL FIELD SPLICES.

5. BEARING: ALL STEEL JOISTS/GIRDERS OR BEAMS SHALL BEAR AT A PANEL POINT. JOISTS OR BEAMS TO BE EQUALLY SPACED BETWEEN COLUMN LINES UNLESS NOTED OTHERWISE. MANUFACTURER SHALL DESIGN JOIST SHOES WHERE BEARING LENGTH IS LESS THAN 4" AT LH SERIES JOIST AND LESS THAN 3" AT K SERIES JOIST.

6. BRIDGING: MANUFACTURERS SHALL PROVIDE BRIDGING AS REQUIRED, PER SJI SPECIFICATIONS. DO NOT WELD BOTTOM CHORD TO JOIST SUPPORT UNTIL FULL DEAD LOAD IS IN PLACE. WHERE CROSS BRIDGING INTERFERES WITH MECHANICAL INSTALLATIONS, REMOVE THIS CROSS BRIDGING AFTER TOTAL DEAD LOAD IS APPLIED AND REPLACE WITH HORIZONTAL ANGLES L2x2x3 16 AT TOP AND BOTTOM CHORDS.

POST-INSTALLED ANCHORS:

1. EXCEPT WHERE INDICATED ON THE DRAWINGS, POST-INSTALLED ANCHORS SHALL CONSIST OF THE FOLLOWING ANCHOR TYPES. ALL ANCHORS ARE TO BE INSTALLED PER THE MANUFACTURERS RECOMMENDATIONS.

ANCHORAGE TO CONCRETE:

ADHESIVE ANCHORS:

HILTI HIT-HY 200	PER ICC ESR-3187
HILTI HIT-RE 500 V3	PER ICC ESR-3814
SIMPSON AT-3G	PER ICC ESR-5026
SIMPSON SET-3G	PER ICC ESR-4057

MECHANICAL ANCHORS:

HILTI KWIK HUS	PER ICC ESR-3027
SIMPSON TITEN HD	PER ICC ESR-2713

REBAR DOWELING TO CONCRETE:

ADHESIVES:

HILTI HIT-HY 200	PER ICC ESR-3187
HILTI HIT-RE 500 V3	PER ICC ESR-3814
SIMPSON AT-3G	PER ICC ESR-5026
SIMPSON SET-3G	PER ICC ESR-4057

ANCHORAGE TO SOLID GROUTED MASONRY:

ADHESIVE ANCHORS:

HILTI HIT-HY 200	PER ICC ESR-3963
SIMPSON SET-3G	PER ICC ESR-4057

MECHANICAL ANCHORS:

SIMPSON TITEN HD	PER ICC ESR-1056

2. SUBSTITUTION REQUESTS FOR ALTERNATE PRODUCTS MUST BE APPROVED IN WRITING BY THE STRUCTURAL ENGINEER OF RECORD AND OWNER PRIOR TO USE. CONTRACTOR SHALL PROVIDE CALCULATIONS DEMONSTRATING THAT THE SUBSTITUTED PRODUCT IS CAPABLE OF ACHIEVING THE PERFORMANCE VALUES OF THE SPECIFIED PRODUCT. SUBSTITUTIONS WILL BE EVALUATED BY THEIR HAVING AN ICC ESR OR IAPMO ER SHOWING COMPLIANCE WITH THE RELEVANT BUILDING CODE FOR SEISMIC USES, LOAD RESISTANCE, INSTALLATION CATEGORY, AND AVAILABILITY OF COMPREHENSIVE INSTALLATION INSTRUCTIONS. ADHESIVE ANCHOR EVALUATION WILL ALSO CONSIDER CREEP, IN-SERVICE TEMPERATURE AND INSTALLATION TEMPERATURE.

3. INSTALL THE ANCHORS PER THE MANUFACTURER INSTRUCTIONS, AS INCLUDED IN THE ANCHOR PACKAGING.

4. ANCHOR CAPACITY IS DEPENDANT UPON SPACING BETWEEN ADJACENT ANCHORS AND PROXIMITY OF ANCHORS TO EDGE OF CONCRETE. INSTALL ANCHORS IN ACCORDANCE WITH SPACING AND EDGE CLEARANCES INDICATED ON THE DRAWINGS.

SPECIAL INSPECTION ITEMS:

1. THE OWNER OR THE OWNER'S AUTHORIZED AGENT, OTHER THAN THE CONTRACTOR, SHALL EMPLOY ONE OR MORE APPROVED AGENCIES TO PROVIDE SPECIAL INSPECTIONS AND TESTS DURING CONSTRUCTION ON THE TYPES OF WORK SPECIFIED PER IBC SECTION 1705 AND IDENTIFY THE APPROVED AGENCIES TO THE BUILDING OFFICIAL. SPECIAL INSPECTIONS ARE REQUIRED AS FOLLOWS:

VERIFICATION AND INSPECTION OF STRUCTURAL STEEL

	VERIFICATION AND INSPECTION	OBSERVE	PERFORM
1.	INSPECTION TASKS PRIOR TO WELDING (TABLE N5.4-1)		
A.	WELDER QUALIFICATION RECORDS AND CONTINUITY RECORDS	X	
B.	WELDING PROCEDURE SPECIFICATIONS (WPS) AVAILABLE		X
C.	MANUFACTURER CERTIFICATIONS FOR WELDING CONSUMABLES AVAILABLE		X
D.	MATERIAL IDENTIFICATION (TYPE/GRADE)	X	
E.	WELDER IDENTIFICATIONS SYSTEM (THE FABRICATOR OR ERECTOR, AS APPLICABLE, SHALL MAINTAIN A SYSTEM BY WHICH A WELDER WHO HAS WELDED A JOINT OR MEMBER CAN BE IDENTIFIED. (STAMPS, IF USED, SHALL BE THE LOW STRESS TYPE)	X	
F.	FIT-UP OF GROOVE WELDS (INCLUDING JOINT GEOMETRY), JOINT PREPARATION, DIMENSIONS (ALIGNMENT, ROOT OPENING, ROOT FACE, BEVEL), CLEANLINESS (CONDITION OF STEEL SURFACES), TACKING (TACK WELD QUALITY AND LOCATION) , BACKING TYPE AND FIT (IF APPLICABLE)	X	
G.	FIT-UP OF CJP GROOVE WELDS OF HSS T-, Y- AND K-JOINTS WITHOUT BACKING (INCLUDING JOINT GEOMETRY), JOINT PREPARATIONS, DIMENSIONS (ALIGNMENT, ROOT OPENING, ROOT FACE, BEVEL), CLEANLINESS (CONDITION OF STEEL SURFACES), TACKING (TACK WELD QUALITY AND LOCATION	X	
H.	CONFIGURATION AND FINISH OF ACCESS HOLES	X	
I.	FIT-UP OF FILLET WELDS, DIMENSIONS (ALIGNMENT, GAPS AT ROOT), CLEANLINESS (CONDITION OF STEEL SURFACES) TACKING (TACK WELD QUALITY AND LOCATION)	X	
J.	CHECK WELDING EQUIPMENT	-	-
2.	INSPECTION TASKS DURING WELDING (TABLE N5.4-2)		
A.	CONTROL AND HANDLING OF WELDING CONSUMABLES, PACKAGING, EXPOSURE CONTROL	X	
B.	NO WELDING OVER CRACKED TACK WELDS	X	
C.	ENVIRONMENTAL CONDITIONS, WIND SPEED WITHIN LIMITS, PRECIPITATION AND TEMPERATURE	X	
D.	WELDING PROCEDURE SPECIFICATIONS (WPS) FOLLOWED, SETTINGS ON WELDING EQUIPMENT, TRAVEL SPEED, SELECTED WELDING MATERIALS, SHIELDING GAS TYPE/FLOW RATE, PREHEAT APPLIED, INTERPASS TEMPERATURE MAINTAINED (MIN./MAX.), PROPER POSITION (F, V, H, OH)	X	
E.	WELDING TECHNIQUES, INTERPASS AND FINAL CLEANING. EACH PASS WITHIN PROFILE LIMITATIONS. EACH PASS MEETS QUALITY REQUIREMENTS	X	
F.	PLACEMENT AND INSTALLATION OF STEEL HEADED STUD ANCHORS		X
3.	INSPECTION TASKS AFTER WELDING (TABLE N5.4-3)		
A.	WELDS CLEANED	X	
B.	SIZE LENGTH AND LOCATION OF WELDS		X
C.	WELDS MEET VISUAL ACCEPTANCE CRITERIA, CRACK PROHIBITION, WELD/BASE-METAL FUSION, CRATER CROSS SECTION, WELD PROFILES, WELD SIZE, UNDERCUT, POROSITY		X
D.	ARC STRIKES		X
E.	K-AREA (WHEN WELDING OF DOUBLER PLATES, CONTINUITY PLATES OR STIFFENERS HAS BEEN PERFORMED IN THE K-AREA, VISUALLY INSPECT THE WEB K-AREA FOR CRACKS WITHIN 3 IN. (75 MM) OF THE WELD).		X
F.	WELD ACCESS HOLES IN ROLLED HEAVY SHAPES AND BUILT-UP HEAVY SHAPES (AFTER ROLLED HEAVY SHAPES AND BUILT-UP HEAVY SHAPES ARE WELDED, VISUALLY INSPECT THE WELD ACCESS HOLE FOR CRACKS)		X
G.	BACKING REMOVED AND WELD TABS REMOVED (IF REQUIRED)		X
H.	REPAIR ACTIVITIES		X
I.	DOCUMENT ACCEPTANCE OR REJECTION OF WELDED JOINT OR MEMBER		X
J.	NO PROHIBITED WELDS HAVE BEEN ADDED WITHOUT THE APPROVAL OF THE EOR	X	
4.	INSPECTION TASKS PRIOR TO BOLTING (TABLE N5.6-1)		
A.	MANUFACTURER'S CERTIFICATIONS AVAILABLE FOR FASTENER MATERIALS		X
B.	FASTENERS MARKED IN ACCORDANCE WITH ASTM REQUIREMENTS	X	
C.	CORRECT FASTENERS SELECTED FOR THE JOINT DETAIL (GRADE, TYPE, BOLT LENGTH IF THREADS ARE TO BE EXCLUDED FROM SHEAR PLANE)	X	
D.	CORRECT BOLTING PROCEDURE SELECTED FOR JOINT DETAIL	X	
E.	CONNECTION ELEMENTS, INCLUDING THE APPROPRIATE FAYING SURFACE CONDITION AND HOLE PREPARATION, IF SPECIFIED, MEET APPLICABLE REQUIREMENTS	X	
F.	PRE-INSTALLED VERIFICATION TESTING BY INSTALLATION PERSONNEL OBSERVED AND DOCUMENTED FOR FASTENER ASSEMBLIES AND METHODS USED	X	
G.	PROTECTED STORAGE PROVIDED FOR BOLTS, NUTS, WASHERS AND OTHER FASTENER COMPONENTS	X	
5.	INSPECTION TASKS DURING BOLTING (TABLE N5.6-2)		
A.	FASTENER ASSEMBLIES PLACED IN ALL HOLES AND WASHERS AND NUTS ARE POSITIONED AS REQUIRED	X	
B.	JOINT BROUGHT TO THE SNUG-TIGHT CONDITION PRIOR TO THE PRETENSIONING OPERATION	X	
C.	FASTENER COMPONENT NOT TURNED BY THE WRENCH PREVENTED FROM ROTATING	X	
D.	FASTENERS ARE PRETENSIONED IN ACCORDANCE WITH THE RCSC SPECIFICATION, PROGRESSING SYSTEMATICALLY FROM THE MOST RIGID POINT TOWARDS THE FREE EDGES	X	
6.	INSPECTION TASKS AFTER BOLTING (TABLE N5.6-3)		
A.	DOCUMENT ACCEPTANCE OR REJECTION OF BOLTED CONNECTIONS		X
7.	INSPECTOR SHALL BE ON PREMISES FOR INSPECTION DURING THE PLACEMENT OF ANCHOR RODS AND OTHER EMBEDMENTS SUPPORTING STRUCTURAL STEEL. THE INSPECTOR SHALL INSPECT THE FABRICATED STEEL OR ERECTED STEEL FRAME, AS APPLICABLE, TO VERIFY COMPLIANCE WITH THE DETAILS SHOWN ON THE CONSTRUCTION DOCUMENTS (SECTION N5.7)	X	

SPECIAL INSPECTION FOR MASONRY LEVEL 3 (TMS602)

	TYPE	CONTINUOUS	PERIODIC
1.	PRIOR TO CONSTRUCTION, VERIFY CERTIFICATES OF COMPLIANCE USED IN MASONRY CONSTRUCTION		X
2.	PRIOR TO CONSTRUCTION, VERIFICATION OF F'm AND F'AAC, EXCEPT WHERE SPECIFICALLY EXEMPTED BY THE CODE.		X
3.	DURING CONSTRUCTION, VERIFICATION OF SLUMP FLOW AND VISUAL STABILITY INDEX (VSI) WHEN SELF-CONSOLIDATING GROUT IS DELIVERED TO THE PROJECT SITE.		X
4.	DURING CONSTRUCTION, VERIFICATION OF F'm AND F'AAC FOR EVERY 5,000 SQ. FT.		X
5.	DURING CONSTRUCTION, VERIFICATION OF PROPORTIONS OF MATERIALS AS DELIVERED TO THE PROJECT SITE FOR PREMIXED OR PREBLENDED MORTAR, PRESTRESSING GROUT, AND GROUT OTHER THAN SELF-CONSOLIDATING GROUT.		X
6.	AS MASONRY CONSTRUCTION BEGINS, VERIFY THAT THE FOLLOWING ARE IN COMPLIANCE:		
A.	PROPORTIONS OF SITE-PREPARED MORTAR		X
B.	GRADE, TYPE AND SIZE OF REINFORCEMENT, CONNECTORS, ANCHOR BOLTS, AND PRESTRESSING TENDONS AND ANCHORAGES		X
C.	PROPERTIES OF THIN-BED MORTAR FOR AAC MASONRY	X	
D.	SAMPLE PANEL CONSTRUCTION	X	
7.	PRIOR TO GROUTING, VERIFY THAT THE FOLLOWING ARE IN COMPLIANCE:		
A.	GROUT SPACE	X	
B.	PLACEMENT OF REINFORCEMENT, CONNECTORS, AND ANCHOR BOLTS	X	
C.	PROPORTIONS OF SITE-PREPARED GROUT AND PRESTRESSING GROUT FOR BONDED TENDONS		X
8.	VERIFY COMPLIANCE OF THE FOLLOWING DURING CONSTRUCTION:		
A.	MATERIALS AND PROCEDURES WITH THE APPROVED SUBMITTALS		X
B.	PLACEMENT OF MASONRY UNITS AND MORTAR JOINT CONSTRUCTION		X
C.	SIZE AND LOCATION OF STRUCTURAL MEMBERS		X
D.	TYPE, SIZE, AND LOCATION OF ANCHORS, INCLUDING OTHER DETAILS OF ANCHORAGE OF MASONRY TO STRUCTURAL MEMBERS, FRAMES, OR OTHER CONSTRUCTION	X	
E.	WELDING OF REINFORCEMENT	X	
F.	PREPARATION, CONSTRUCTION, AND PROTECTION OF MASONRY DURING COLD WEATHER (TEMPERATURE BELOW 40°F) OR HOT WEATHER (TEMPERATURE ABOVE 90°F)		X
9.	OBSERVE PREPARATION OF GROUT SPECIMENS, MORTAR SPECIMENS, AND/OR PRISMS	X	

CONCRETE (IBC TABLE 1705.3)

	VERIFICATION AND INSPECTION	CONTINUOUS	PERIODIC
1.	INSPECT REINFORCEMENT, INCLUDING PRESTRESSING TENDONS, AND VERIFY PLACEMENT		X
2.	REINFORCING BAR WELDING:		
A.	VERIFY WELDABILITY OF REINFORCING BARS OTHER THAN ASTM A 706;		X
B.	INSPECT SINGLE-PASS FILLET WELDS, MAXIMUM 5/16"; AND	X	
C.	INSPECT ALL OTHER WELDS.	X	
3.	INSPECT ANCHORS CAST IN CONCRETE		
4.	INSPECT ANCHORS POST INSTALLED IN HARDENED CONCRETE MEMBERS.		
A.	ADHESIVE ANCHORS INSTALLED IN HORIZONTALLY OR UPWARDLY INCLINED ORIENTATIONS TO RESIST SUSTAINED TENSION LOADS.	X	
B.	MECHANICAL ANCHORS AND ADHESIVE ANCHORS NOT DEFINED IN 4.A.		X
5.	VERIFY USE OF REQUIRED DESIGN MIX.		X
6.	PRIOR TO CONCRETE PLACEMENT, FABRICATE SPECIMENS FOR STRENGTH TESTS, PERFORM SLUMP AND AIR CONTENT TESTS, AND DETERMINE THE TEMPERATURE OF THE CONCRETE.	X	
7.	INSPECT CONCRETE AND SHOTCRETE PLACEMENT FOR PROPER APPLICATION TECHNIQUES.	X	
8.	VERIFY MAINTENANCE OF SPECIFIED CURING TEMPERATURE AND TECHNIQUES.		X
9.	INSPECT PRESTRESSED CONCRETE FOR:		
A.	APPLICATION OF PRESTRESSING FORCES; AND	X	
B.	GROUTING OF BONDED PRESTRESSING TENDONS.	X	
10.	INSPECT ERECTION OF PRECAST CONCRETE MEMBERS.	X	
11.	INSPECT FORMWORK FOR SHAPE, LOCATION AND DIMENSIONS OF THE CONCRETE MEMBER BEING FORMED.	X	

VERIFICATION AND INSPECTION OF STEEL DECK (PER SDI QA/QC)

	VERIFICATION AND INSPECTION	OBSERVE	PERFORM
1.	INSPECTION OR EXECUTION TASKS PRIOR TO DECK PLACEMENT (TABLE 1.1)		
A.	VERIFY COMPLIANCE OF MATERIALS (DECK AND ALL DECK ACCESSORIES) WITH CONSTRUCTION DOCUMENTS, INCLUDING PROFILES, MATERIAL PROPERTIES, AND BASE METAL THICKNESS		X
B.	DOCUMENT ACCEPTANCE OR REJECTION OF DECK AND DECK ACCESSORIES		X
2.	INSPECTION OR EXECUTION TASKS AFTER TO DECK PLACEMENT (TABLE 1.2)		
A.	VERIFY COMPLIANCE OF DECK AND ALL DECK ACCESSORIES INSTALLATION WITH CONSTRUCTION DOCUMENTS		X
B.	VERIFY COMPLIANCE OF DECK AND ALL DECK ACCESSORIES INSTALLATION WITH CONSTRUCTION DOCUMENTS		X
C.	DOCUMENT ACCEPTANCE OR REJECTION OF INSTALLATION OF DECK AND DECK ACCESSORIES		X
3.	INSPECTION OR EXECUTION TASKS PRIOR TO WELDING (TABLE 1.3)		
A.	WELDING PROCEDURE SPECIFICATIONS (WPS) AVAILABLE	X	
B.	MANUFACTURER CERTIFICATIONS FOR WELDING CONSUMABLES AVAILABLE	X	
C.	MATERIAL IDENTIFICATION (TYPE/GRADE)	X	
D.	CHECK WELDING EQUIPMENT	X	
4.	INSPECTION OR EXECUTION TASKS DURING WELDING (TABLE 1.4)		
A.	USE OF QUALIFIED WELDERS	X	
B.	CONTROL AND HANDLING OF WELDING CONSUMABLES	X	
C.	ENVIRONMENTAL CONDITIONS (WIND SPEED, MOISTURE, TEMPERATURE)	X	
D.	WPS FOLLOWED	X	
5.	INSPECTION OR EXECUTION TASKS AFTER WELDING (TABLE 1.5)		
A.	VERIFY SIZE AND LOCATION OF WELDS, INCLUDING SUPPORT, SIDELAP, AND PERIMETER WELDS		X
B.	WELDS MEET VISUAL ACCEPTANCE CRITERIA	X	
C.	VERIFY REPAIR ACTIVITIES	X	
D.	DOCUMENT ACCEPTANCE OR REJECTION OF WELDS	X	
6.	INSPECTION OR EXECUTION TASKS PRIOR TO MECHANICAL FASTENING (TABLE 1.6)		
A.	MANUFACTURER INSTALLATION INSTRUCTIONS AVAILABLE FOR MECHANICAL FASTENERS	X	
B.	PROPER TOOLS AVAILABLE FOR FASTENER INSTALLATION	X	
C.	PROPER STORAGE FOR MECHANICAL FASTENERS	X	
7.	INSPECTION OR EXECUTION TASKS DURING MECHANICAL FASTENING (TABLE 1.7)		
A.	FASTENERS ARE POSITIONED AS REQUIRED	X	
B.	FASTENERS ARE INSTALLED IN ACCORDANCE WITH MANUFACTURER'S INSTRUCTIONS	X	
8.	INSPECTION OR EXECUTION TASKS AFTER MECHANICAL FASTENING (TABLE 1.8)		
A.	CHECK SPACING, TYPE, AND INSTALLATION OF SUPPORT FASTENERS		X
B.	CHECK SPACING, TYPE, AND INSTALLATION OF SIDELAP FASTENERS		X
C.	CHECK SPACING, TYPE, AND INSTALLATION OF PERIMETER FASTENERS		X
D.	VERIFY REPAIR ACTIVITIES		X
E.	DOCUMENT ACCEPTANCE OR REJECTION OF MECHANICAL FASTENERS		X

SPECIAL INSPECTION AND TESTS OF SOILS (IBC TABLE 1705.6)

	TYPE	CONTINUOUS	PERIODIC
1.	VERIFY MATERIALS BELOW SHALLOW FOUNDATIONS ARE ADEQUATE TO ACHIEVE THE DESIGN BEARING CAPACITY.		X
2.	VERIFY EXCAVATIONS ARE EXTENDED TO PROPER DEPTH AND HAVE REACHED PROPER MATERIAL.		X
3.	PERFORM CLASSIFICATION AND TESTING OF COMPACTED FILL MATERIALS.		X
4.	DURING FILL PLACEMENT, VERIFY USE OF PROPER MATERIALS AND PROCEDURES IN ACCORDANCE WITH THE PROVISIONS OF THE APPROVED GEOTECHNICAL REPORT. VERIFY DENSITIES AND LIFT THICKNESS DURING PLACEMENT AND COMPACTION OF COMPACTED FILL.	X	
5.	PRIOR TO PLACEMENT OF COMPACTED FILL, INSPECT SUBGRADE AND VERIFY THAT SITE HAS BEEN PREPARED PROPERLY.		X

SPECIAL INSPECTION OF OPEN-WEB STEEL JOISTS AND JOIST GIRDERS (IBC TABLE 1705.2.3)

	TYPE	CONTINUOUS	PERIODIC
1.	OPEN-WEB STEEL JOISTS AND JOIST GIRDERS.		
A.	END CONNECTIONS - WELDING OR BOLTED		X
B.	BRIDGING - HORIZONTAL OR DIAGONAL		
	1. STANDARD BRIDGING		X
	2. BRIDGING THAT DIFFERS FROM THE SJI SPECIFICATIONS LISTED IN SECTION 2207.1		X

QUALITY ASSURANCE PROGRAM:

A. THE SPECIAL INSPECTOR SHALL OBSERVE THE WORK ASSIGNED TO BE CERTAIN IT CONFORMS WITH THE APPROVED DESIGN DRAWINGS AND SPECIFICATIONS.

B. THE SPECIAL INSPECTOR SHALL FURNISH INSPECTION REPORTS TO THE BUILDING OFFICIAL, AND TO THE STRUCTURAL ENGINEER OF RECORD. ALL DISCREPANCIES SHALL BE BROUGHT TO THE IMMEDIATE ATTENTION OF THE CONTRACTOR FOR CORRECTION, THEN, IF UNCORRECTED, TO THE DESIGN AUTHORITY AND THE BUILDING OFFICIAL.

C. SITE OBSERVATIONS SHALL BE DONE BY THE ENGINEER OF RECORD OR AN APPROVED LICENSED STRUCTURAL ENGINEER. THE CONTRACTOR SHALL NOTIFY THE ENGINEER WHEN HE HAS REACHED THE CONSTRUCTION STAGE LISTED BELOW AND BEFORE THE WORK TO BE OBSERVED IS COVERED UP, BECOMES HIDDEN FROM VIEW, OR BECOMES UNACCESSABLE. THIS IS TO PROVIDE THE STRUCTURAL ENGINEER THE OPPORTUNITY TO PERFORM A SITE OBSERVATION, AT THE ENGINEERS DISCRETION, AT THAT STAGE. AT THE CONCLUSION OF THE PROJECT, THE STRUCTURAL OBSERVER SHALL SUBMIT TO THE BUILDING OFFICIAL A WRITTEN STATEMENT THAT THE SITE VISITS HAVE BEEN MADE AND IDENTIFY ANY REPORTED DEFICIENCIES THAT HAVE NOT BEEN RESOLVED.
   1. PRIOR TO FOOTING POURS.
   2. PRIOR TO THE FIRST GROUTING OF MASONRY, REVIEW THE PLACEMENT OF MASONRY AND PLACEMENT OF REINFORCING FOR ALL STRUCTURAL ELEMENTS.
   3. AFTER SUBSTANTIAL COMPLETION OF PRECAST ERECTION AND PRIOR TO FIRST TOPPING SLAB POUR OF BOTH FLOOR AND ROOF LEVELS.
   4. REVIEW THE STRUCTURAL FRAMING AND PLACEMENT AND CONNECTIONS OF THE STEEL ROOF DECK.

PROFESSIONAL ENGINEER LICENSED 14134 STATE OF IDAHO DAVID B. PORTER 03/17/2025

DATE

PHASE 1 PART B FOR:
TWIN FALLS COUNTY - WRIGHT AVE JAIL
2515 Wright Ave, Twin Falls, ID 83301
GENERAL STRUCTURAL NOTES

Laughlin Ricks Architecture
architecture/planning
134 3RD Ave East, * Twin Falls, Idaho 83301
(208) 736-8050

DATE: 03/17/2025
GTC Drawn | KBB Checked
24-145 PROJECT #

S1B-1.1

This drawing is the property of Ridge Structural Engineering, Inc. Legally, the drawing can NOT be copied in whole or in pieces. It is only to be used for the project and site specifically identified hereon and is not to be used on any other project. Contractor shall carefully review all dimensions, details, and conditions and report at once any error, inconsistency or omission discovered before construction. The contractor assumes full liability for deviations from the intent of these plans.

JOB NO.: 24.145 | PROJECT MANAGER: KBB | CAD OPERATOR: GTC

Ridge Structural Engineering
1152 Bond Avenue, Suite B
Rexburg, ID 83440
phone: 208.227.8404
contact@ridgestructural.com

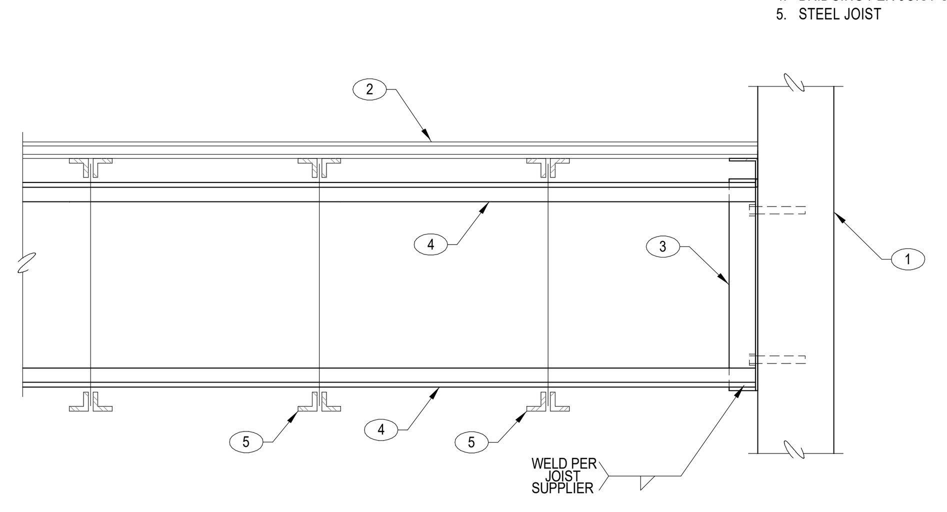

KEYNOTES:
1. MASONRY OR PRECAST WALL
2. STEEL DECK
3. L3x3x1/4 W/ (2) 5/8" DIA SCREW ANCHORS W/ 5" MINIMUM EMBEDMENT
4. BRIDGING PER JOIST SUPPLIER
5. STEEL JOIST

NOTES:
A. PER 'SJI' REQUIREMENTS BOTTOM HORIZONTAL BRIDGING SHALL NOT KICK UP AT AN ANGLE TOWARDS DECK BEARING, BUT SHALL BE INSTALLED HORIZONTAL AS SHOWN.

T12 TYPICAL JOIST BRIDGING ADJACENT TO MASONRY OR PRECAST WALL
SCALE: NTS

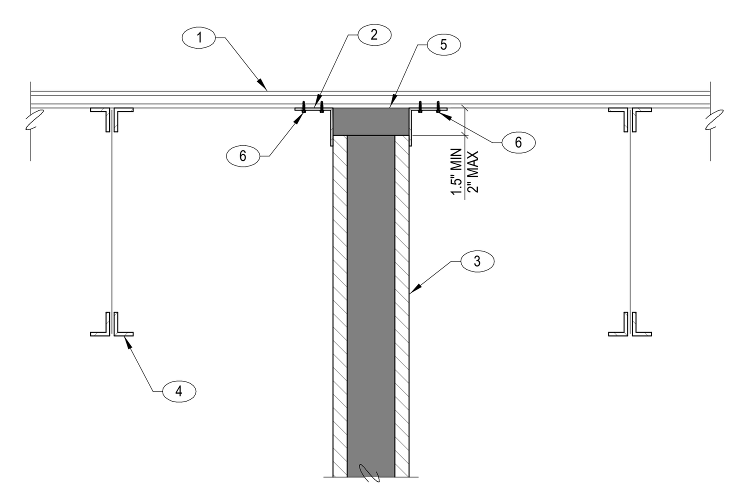

KEYNOTES:
1. STEEL DECK
2. L4x4x1/4 x CONT STEEL ANGLES AT EACH SIDE OF MASONRY WALL
3. MASONRY WALL
4. STEEL JOIST
5. SEE ARCH FOR FIRE-PROOFING AND SMOKE SEAL REQUIREMENT
6. (2) #10 SCREWS AT 18" O.C.

T8 TYPICAL INTERIOR MASONRY WALL PARALLEL W/ JOISTS (NON-BEARING)
SCALE: NTS

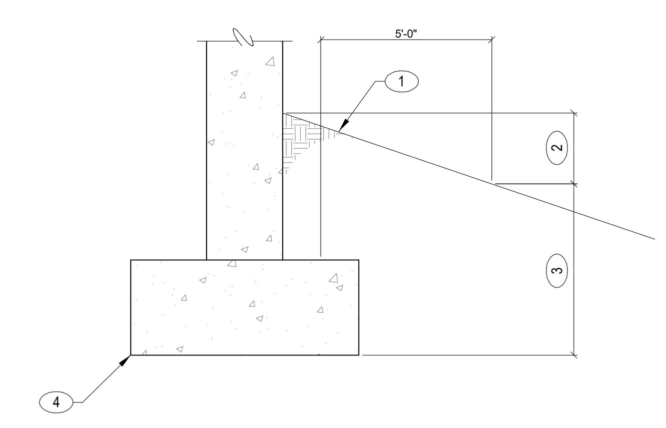

KEYNOTES:
1. SLOPED FINISH GRADE
2. MINIMUM FOOTING DEPTH PER GSN (12" MINIMUM)
3. DEEPEN FOOTING AS REQUIRED TO ACCOUNT FOR SLOPED GRADE
4. CONCRETE FOOTING

NOTES:
A. FOR ADDITIONAL INFORMATION, SEE PLANS AND DETAILS

T4 TYPICAL DETAIL FOR FOUNDATION EMBEDMENT
SCALE: NTS

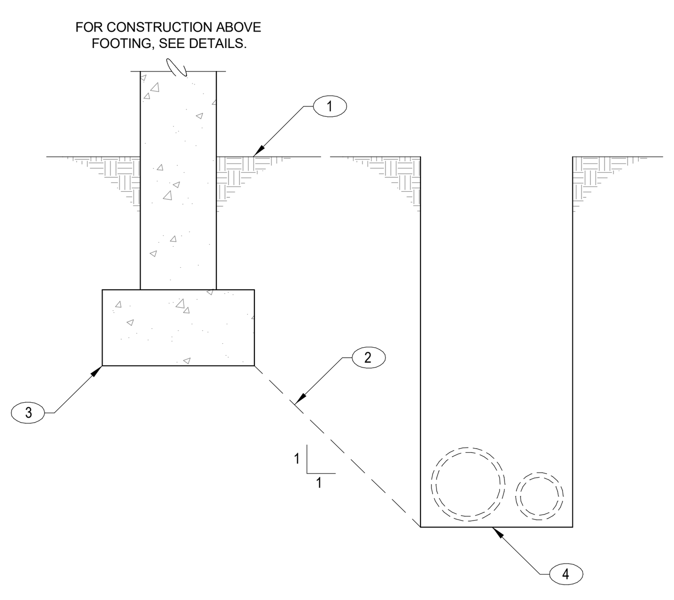

KEYNOTES:
1. FINISHED GRADE WHERE OCCURS
2. DO NOT EXCAVATE A TRENCH CLOSER THAN 45° ANGLE TO BELOW BOTTOM FOOTING OR FOUNDATION
3. BOTTOM OF CONCRETE FOOTING
4. BOTTOM OF TRENCH

NOTES:
A. DO NOT UNDERCUT EXISTING FOOTINGS
B. NO PIPE OR OTHER UTILITIES SHALL PASS THRU WALL FOOTINGS OR UNDER COLUMN FOOTINGS

T1 TRENCH PARALLEL TO CONTINUOUS STRIP FOOTING
SCALE: NTS

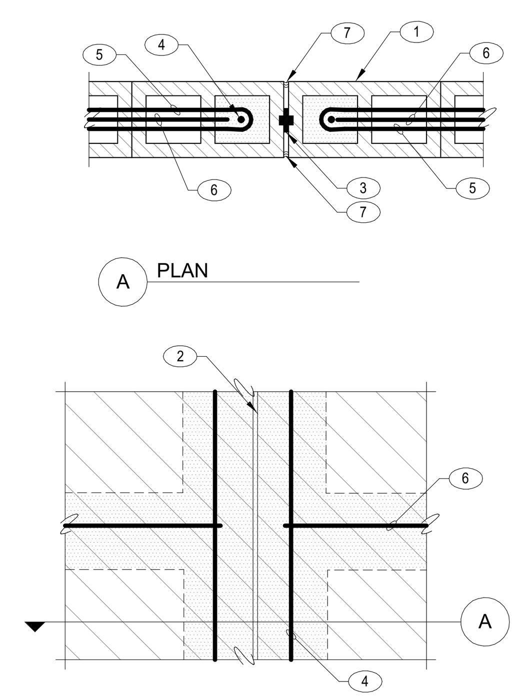

KEYNOTES:
1. MASONRY WALL
2. CONTROL JOINT
3. CONTROL JOINT MATERIAL PER ARCHITECTURAL DRAWINGS AND SPECIFICATIONS
4. A(1) VERTICAL BAR EACH SIDE IN SOLID GROUTED CELLS TO MATCH VERTICAL WALL REINFORCING
5. #4 x 35" LONG (18" EACH LEG) HAIRPIN AT HORIZONTAL BAR SPACING
6. TYPICAL HORIZONTAL BAR
7. EXTERIOR GRADE SEALANT OVER BACKER ROD

NOTES:
A. BOND BEAM BARS AT FLOOR AND ROOF LINES SHALL RUN CONTINUOUS THROUGH CONTROL JOINT

T13 CONTROL JOINT IN MASONRY WALL
SCALE: NTS

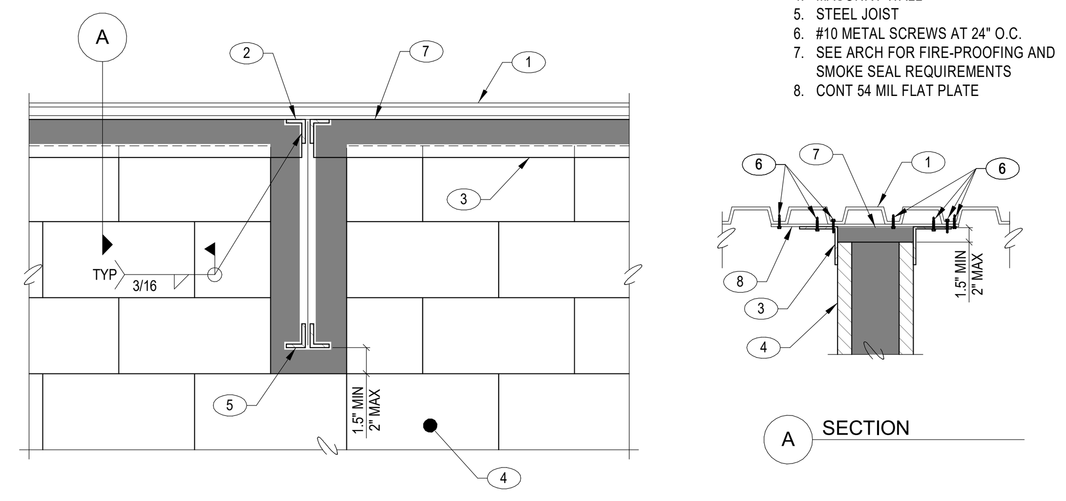

KEYNOTES:
1. STEEL DECK
2. BOUNDARY ATTACHMENT
3. L4x4x1/4 STEEL ANGLES BETWEEN JOISTS EACH SIDE OF MASONRY WALL
4. MASONRY WALL
5. STEEL JOIST
6. #10 METAL SCREWS AT 24" O.C.
7. SEE ARCH FOR FIRE-PROOFING AND SMOKE SEAL REQUIREMENTS
8. CONT 54 MIL FLAT PLATE

NOTES:
A. ALL OTHER FRAMING NOT SHOWN FOR CLARITY

T9 TYPICAL INTERIOR MASONRY WALL PERPENDICULAR W/ JOISTS (NON-BEARING)
SCALE: NTS

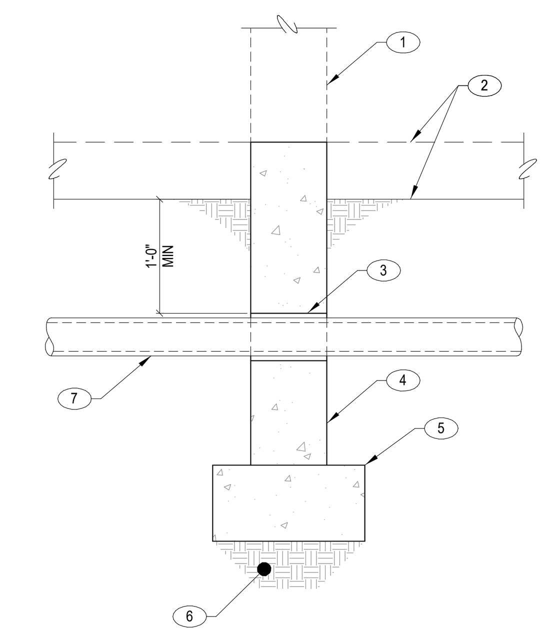

KEYNOTES:
1. CAST-IN-PLACE WALL AS OCCURS, SEE PLAN
2. SIDEWALK, PAVEMENT, OR FINISH GRADE PER ARCH
3. SLEEVE, 8" DIA MAX, PROVIDE 1/2" MINIMUM CLEARANCE AROUND PIPE-CONDUIT
4. CONCRETE WALL, SEE PLAN
5. CONCRETE FOOTING, SEE PLAN
6. COMPACTED SUB-GRADE BELOW FOOTING, SEE PLAN
7. PIPE OR CONDUIT

NOTES:
A. NO PIPE SHALL PASS THROUGH FOOTINGS OR UNDER COLUMN FOOTINGS. FOR ADDITIONAL INFORMATION SEE PLANS AND DETAILS
B. MULTIPLE PIPES/CONDUIT SLEEVES ALLOWED PROVIDED SLEEVES ARE SPACED W/ MINIMUM OF 2x SLEEVE DIAMETER BETWEEN SLEEVES
C. SLEEVES SHALL NOT OCCUR WITHIN 12" OF POINT LOADS OR HOLDOWN ANCHORS
D. PIPES PASSING THROUGH PRECAST WALLS SHALL BE CORE-DRILLED AFTER WALL ERECTION. COORDINATE CORE LOCATIONS WITH PRECAST SHOP DRAWINGS TO AVOID CUTTING PRESTRESSING REINFORCEMENT.

T5 TYPICAL PIPE THROUGH CAST-IN-PLACE STEM WALL
SCALE: NTS

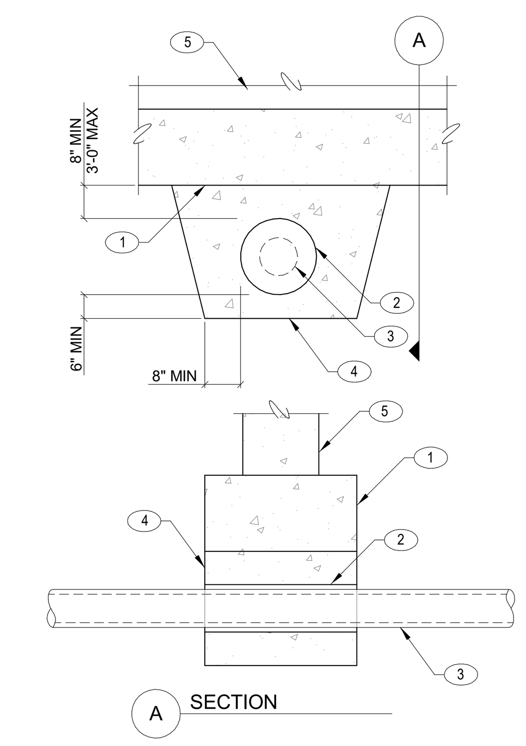

KEYNOTES:
1. CONCRETE FOOTING
2. SLEEVE - PROVIDE 1/2" MINIMUM CLEARANCE AROUND PIPE OR CONDUIT
3. PIPE OR CONDUIT
4. CONCRETE FILL TO BE PLACED BEFORE FOOTING IS POURED - FORM SAME AS FOOTING AND POUR FULL WIDTH OF PIPE TRENCH
5. STEM WALL

NOTES:
A. NO PIPE SHALL PASS THRU FOOTING OR UNDER COLUMN FOOTINGS. FOR TRENCHES GREATER THAN 3'-6" BELOW BOTTOM OF FOOTING, SEE PIPE PASSING BELOW WALL FOOTING DETAIL.

T2 PIPE PASSING UNDER WALL FOOTING IN SHALLOW TRENCH
SCALE: NTS

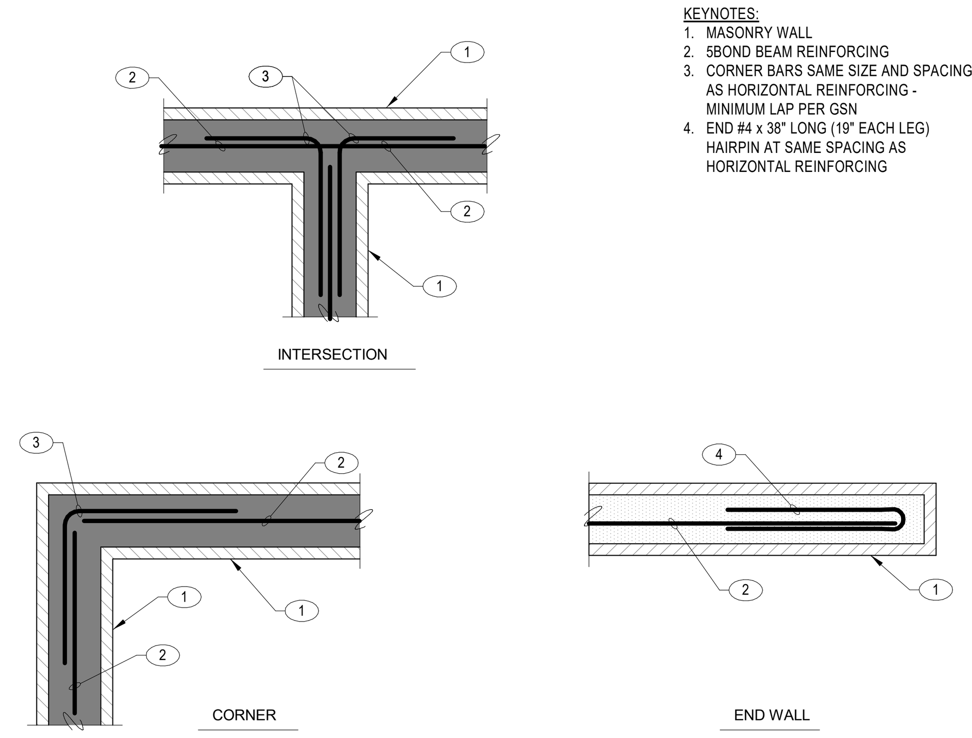

KEYNOTES:
1. MASONRY WALL
2. 5BOND BEAM REINFORCING
3. CORNER BARS SAME SIZE AND SPACING AS HORIZONTAL REINFORCING - MINIMUM LAP PER GSN
4. END #4 x 38" LONG (19" EACH LEG) HAIRPIN AT SAME SPACING AS HORIZONTAL REINFORCING

T14 PLAN - CORNER AND END REINFORCING IN MASONRY WALLS
SCALE: NTS

CLASS B TENSION SPLICE LENGTHS

BAR SIZE	f'c = 3,000 PSI HORIZONTAL BARS W/ >12" OF CONC. BELOW	f'c = 3,000 PSI VERTICAL AND BOTTOM HORIZONTAL BARS	f'c = 4,000 PSI HORIZONTAL BARS W/ >12" OF CONC. BELOW	f'c = 4,000 PSI VERTICAL AND BOTTOM HORIZONTAL BARS	f'c = 5,000 PSI HORIZONTAL BARS W/ >12" OF CONC. BELOW	f'c = 5,000 PSI VERTICAL AND BOTTOM HORIZONTAL BARS
#3	12"	12"	12"	12"	12"	12"
#4	19"	15"	17"	13"	15"	12"
#5	29"	23"	26"	20"	23"	18"
#6	32"	25"	28"	21"	25"	19"
#7	54"	41"	47"	36"	42"	32"
#8	70"	54"	61"	47"	54"	42"
#9	89"	68"	77"	59"	69"	53"
#10	112"	87"	97"	75"	87"	67"

NOTES:
1. TOP BARS ARE ANY HORIZONTAL BARS PLACED SO THAT MORE THAN 12" OF FRESH CONCRETE IS CAST IN THE MEMBER BELOW THE REINFORCEMENT.
2. UNLESS NOTED OTHERWISE, LAP SPLICES IN CONCRETE BEAMS, SLABS AND WALLS SHALL BE CLASS "B" TENSION LAP SPLICES.

T10 STEEL REINFORCING LAP SPLICES IN CONCRETE
SCALE: NTS

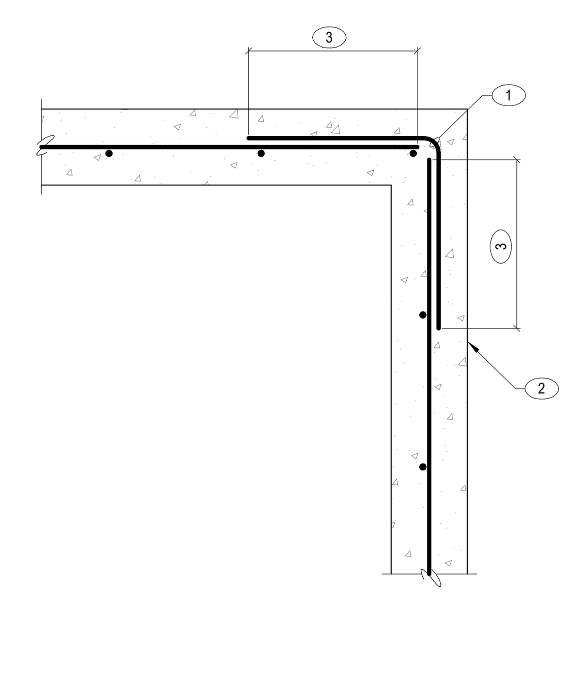

KEYNOTES:
1. CORNER DOWELS TO MATCH HORIZONTAL REINFORCEMENT
2. CONCRETE WALL WITH REINFORCEMENT
3. LAP SPLICE PER TYPICAL STEEL REINFORCING LAP SPLICES IN CONCRETE DETAIL

T6 TYPICAL CONCRETE CORNER
SCALE: NTS

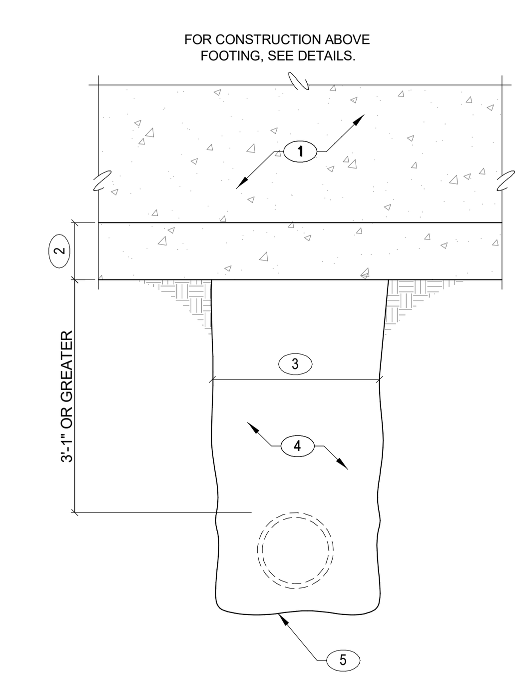

KEYNOTES:
1. STEM WALL
2. CONCRETE FOOTING
3. 1'-6" MAXIMUM (WHERE TRENCH EXCEEDS 1'-6" NOTIFY STRUCTURAL ENGINEER PRIOR TO PLACEMENT OF FOOTINGS)
4. BACKFILL AND RECOMPACT TRENCH PER SOILS REPORT AND SPECIFICATIONS
5. BOTTOM OF TRENCH

NOTES:
A. DO NOT UNDERCUT EXISTING FOOTINGS
B. NO PIPES OR OTHER UTILITIES SHALL PASS THRU WALL FOOTINGS OR UNDER COLUMN FOOTINGS

T3 PIPE PASSING BELOW FOOTING IN DEEP TRENCH
SCALE: NTS

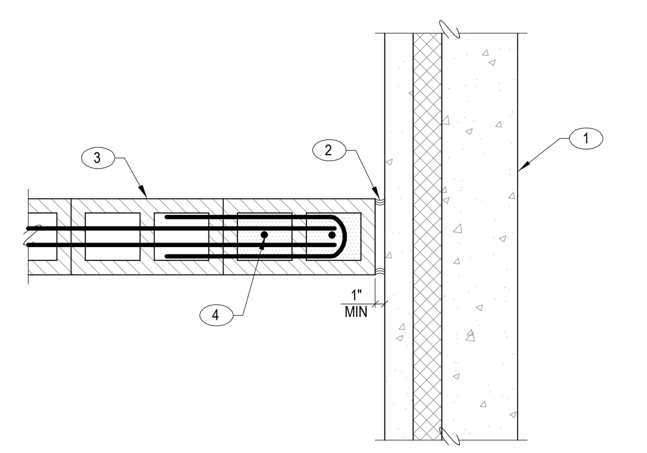

KEYNOTES:
1. PRECAST CONCRETE WALL PANEL
2. CAULK PER ARCH
3. MASONRY WALL
4. END OF MASONRY WALL TO BE TYPE "A" JAMB W/ (2) #5 VERTICAL BARS AS SHOWN IN 'TYPICAL MASONRY JAMB' DETAIL

NOTES:
A. DETAIL STILL APPLICABLE IF MASONRY WALL OCCURS ON OTHER SIDE OF PRECAST WALL THAN WHAT IS SHOWN

T15 TYPICAL MASONRY WALL AT PRECAST WALL
SCALE: NTS

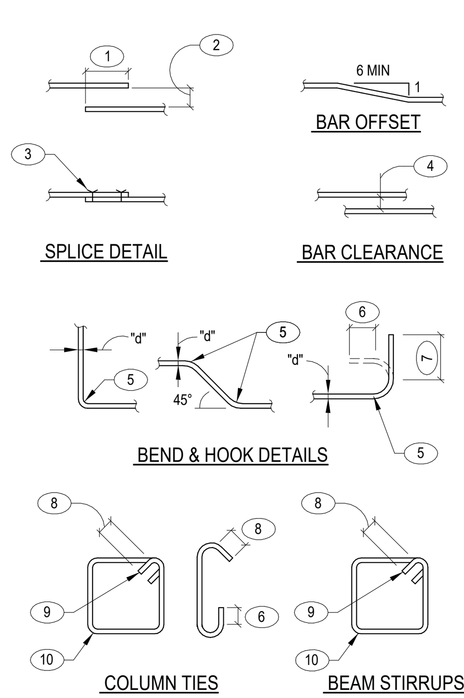

KEYNOTES:
1. LAP - SEE GSN FOR MASONRY AND TYPICAL DETAIL FOR CONCRETE REQUIREMENTS
2. MAXIMUM 1/5 LAP BUT NOT MORE THAN 6"
3. WIRE TIES
4. 1d (1" MINIMUM)
5. RADIUS = 3d FOR BARS NOT OVER #8; 4d FOR #9, #10, AND #11 BARS; 5d FOR #14 AND #18 BARS, 5d FOR ALL GRADE 40 BARS WITH 180° HOOK
6. 4D (4" MINIMUM)
7. 12d (90° HOOK)
8. 6d (4" MINIMUM)
9. 135° BEND
10. BEND AROUND 1 1/2" PIN FOR #3 BARS. BEND AROUND 2" PIN FOR #4 BARS. BEND AROUND 1 1/2" PIN FOR #5 BARS

T11 TYPICAL REINFORCING DETAIL
SCALE: NTS

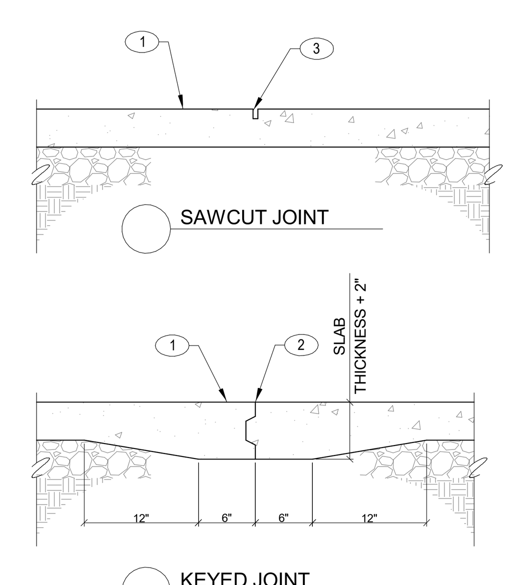

KEYNOTES:
1. CONCRETE SLAB ON GRADE
2. CONTINUOUS KEYED JOINT
3. SAWCUT 1/8" WIDE x 1/4 SLAB THICKNESS IN DEPTH - CUT SHALL BE MADE SOON ENOUGH TO PREVENT SHRINKAGE CRACKING, BUT NOT SO SOON AS TO CAUSE SPALLING OF THE CONCRETE WHILE SAWING. WORK MUST BE COMPLETE WITHIN 16 HOURS OF CONCRETE PLACEMENT.

NOTES:
A. KEYED JOINTS SHALL BE USED AT EXPOSED EDGES OF SLABS (CONSTRUCTION JOINTS)
B. "TOOL WET JOINT", "ZIP STRIP", ETC SHALL MATCH SAWCUT REQUIREMENTS

T7 CONTROL JOINTS IN CONCRETE SLAB ON GRADE
SCALE: NTS

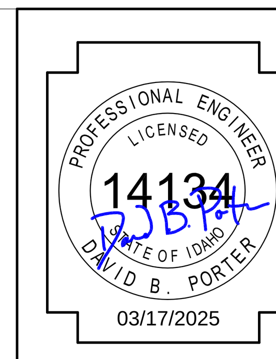

DATE

PHASE 1 PART B FOR:
TWIN FALLS COUNTY - WRIGHT AVE JAIL
2515 Wright Ave, Twin Falls, ID 83301
TYPICAL DETAILS

Laughlin Ricks Architecture
architecture/planning
134 3RD Ave East, * Twin Falls, Idaho 83301
(208) 736-8050

This drawing is the property of Ridge Structural Engineering, Inc. Legally, the drawing can NOT be copied in whole or in pieces. It is only to be used for the project and site specifically identified hereon and is not to be used on any other project. Contractor shall carefully review all dimensions, details, and conditions and report at once any error, inconsistency or omission discovered before construction. The contractor assumes full liability for deviations from the intent of these plans.

JOB NO.: 24.145 | PROJECT MANAGER: KBB | CAD OPERATOR: GTC

Ridge Structural Engineering
1152 Bond Avenue, Suite B
Rexburg, ID 83440
phone: 208.227.8404
contact@ridgestructural.com

DATE: 03/17/2025
GTC Drawn
KBB Checked
24-145 PROJECT #

S1B-1.2

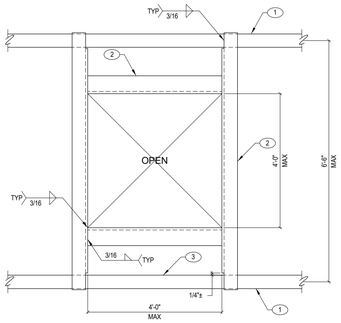

KEYNOTES:
1. ROOF FRAMING MEMBER
2. ANGLE 4"x4"x1/4"
3. FACE OF FRAMING MEMBER

T24 PLAN - TYPICAL OPENING IN ROOF FRAMING
SCALE: NTS

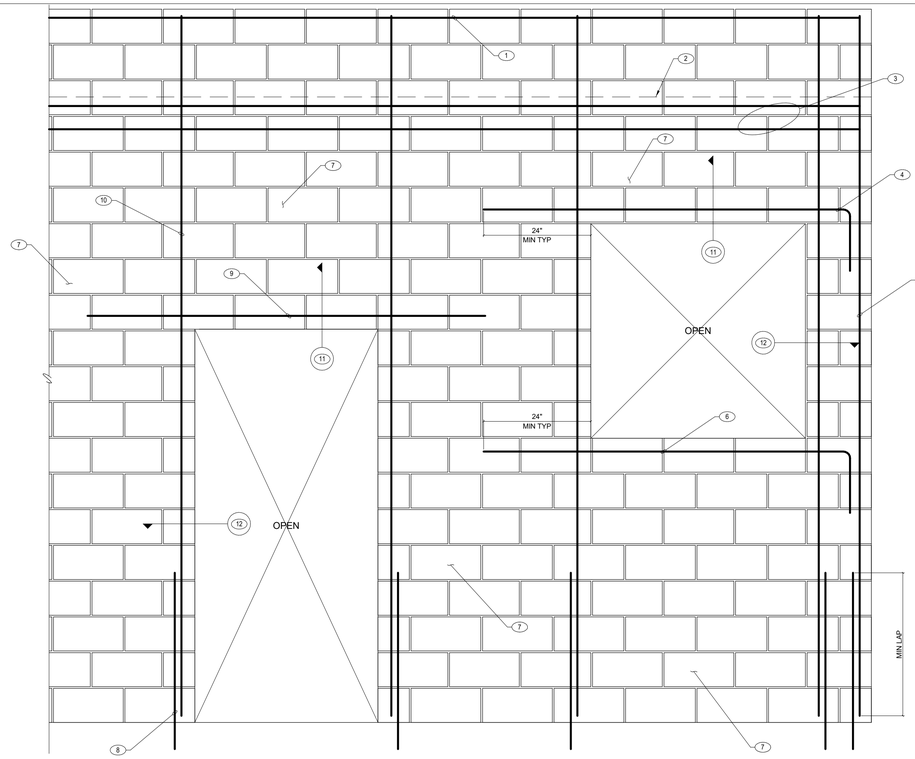

KEYNOTES:
1. 8" DEEP BOND BEAM W/ (2) #4 CONTINUOUS AT TOP OF PARAPET
2. ROOF LINE
3. 16" DEEP BOND BEAM W/ (4) #4 CONTINUOUS AT ROOF AND FLOOR LINES
4. PROVIDE 90° STANDARD HOOK WHERE LINTEL REINFORCING EXTENDS LESS THAN 24" BEYOND OPENING
5. TYPICAL CORNER OR JAMB VERTICAL BARS
6. PROVIDE (1) #4 HORIZONTAL BAR BELOW OPENINGS
7. TYPICAL WALL REINFORCING, SEE PLAN
8. FOUNDATION VERTICAL DOWEL, MATCH ALL VERTICAL WALL REINFORCING
9. LINTEL REINFORCING, SEE PLAN
10. FULL HEIGHT VERTICAL JAMB REINFORCING, SEE PLAN
11. SEE TYPICAL MASONRY LINTEL DETAIL
12. SEE TYPICAL MASONRY JAMB DETAIL

NOTES:
A. ALL WALLS TO BE SOLID GROUTED
B. SPECIAL INSPECTION REQUIRED, SEE GSN
C. SEE PLAN AND CORRESPONDING DETAILS FOR LINTEL AND JAMB REINFORCING REQUIREMENTS
D. COORDINATE W/ ARCHITECTURAL AND M.E.P. DRAWINGS FOR ITEMS EMBEDDED OR RECESSED INTO WALLS

T19 TYPICAL MASONRY WALL REINFORCING AROUND OPENINGS - ELEVATION
SCALE: NTS

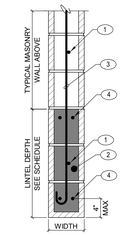

KEYNOTES:
1. CONTINUE STANDARD WALL REINFORCING THROUGH THE MASONRY LINTEL
2. SOLID GROUT ALL LINTELS AND 2'-0" MIN INTO ADJACENT WALLS
3. TIES TO EXTEND AND HOOK BOTTOM LINTEL REINFORCEMENT
4. MASONRY LINTELS REINFORCEMENT, SEE SCHEDULE

NOTES:
A. SEE GSN FOR SPECIAL INSPECTION REQUIREMENTS OF MASONRY LINTELS
B. ANY BAR SPLICES SHALL HAVE A MINIMUM LENGTH OF 72 BAR DIA
C. PROVIDE 90° STANDARD HOOK WHERE HORIZONTAL REINFORCING DOES NOT EXTEND 2'-0" BEYOND OPENING

T16 TYPICAL MASONRY LINTEL
SCALE: NTS

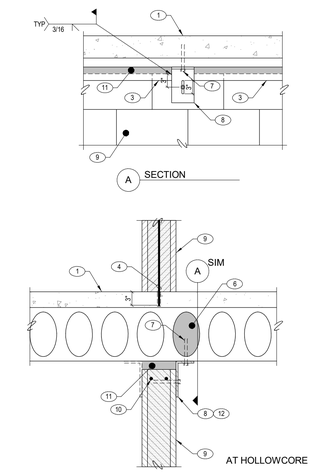

KEYNOTES:
1. CONCRETE TOPPING SLAB
2. PRECAST DOUBLE-T BEAM
3. 1/4"x3" x CONT PLATE BETWEEN ANGLES (AND AROUND DBL T STEMS) WHERE CAULK WOULD ACCESSIBLE TO BE TAMPERED WITH BY INMATES. WHERE TOP OF WALL IS HIGH ABOVE FLOOR OR ABOVE A SECURITY CEILING THIS PLATE MAY NOT BE REQUIRED. COORDINATE REQUIRED PLATE LOCATIONS W/ ARCH AND OWNER.
4. DRILL AND EPOXY WALL VERTICAL REBAR INTO TOPPING SLAB
5. MASONRY WALL
6. SOLID GROUT CELL AT ANCHOR LOCATIONS
7. (1) 1/2" DIA TITEN HD ANCHOR W/ 4" MIN EMBEDMENT INTO FLANGE OF DBL T. DO NOT ATTACH TO WEB
8. L8x4x7/16 x 5" LONG AT 32" O.C., PROVIDE 3" VERTICAL SLOTTED HOLE, SECURE TO BOND BEAM W/ 1/2" DIA TITEN HD W/ 5" MIN EMBEDMENT, STAGGER CONNECTION ON OPPOSITE SIDES OF WALL
9. NON-LOAD BEARING MASONRY WALL
10. CONT 8" BOND BEAM W/ (2) #4 AT TOP OF WALL
11. SEE ARCH FOR FIRE-PROOFING AND SMOKE SEAL REQUIREMENTS
12. L8x8x1/2 MAY BE REQUIRED (IN LIEU OF L8x4x7/16) FOR WALLS THAT RUN PARALLEL TO HOLLOWCORE SPAN SO THAT SCREW ANCHOR CAN BE LOCATED INTO A GROUTED CELL

A SECTION

T22 TYPICAL SMALL OPENING IN STEEL DECK
SCALE: NTS

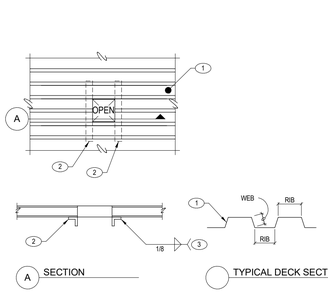

KEYNOTES:
1. STEEL DECK
2. ANGLE SUPPORT L2x2x3/16 BELOW DECK, ANGLE MAY BE PLACED ON TOP OF DECK W/ PRIOR APPROVAL OF ARCHITECT
3. WELD 2" AT EACH RIB, TYPICAL

NOTES:
A. AN OPENING WHICH CUTS ONE WEB (4" MAX DIMENSION PERPENDICULAR TO RIBS), MAY BE CUT IN DECK WITHOUT AND SPECIAL REINFORCING
B. AN OPENING WHICH CUTS TWO WEB (8" MAX DIMENSION PERPENDICULAR TO RIBS), WILL REQUIRE ANGLE SUPPORT SHOWN ABOVE
C. ANY OPENING WHICH CUTS MORE THAN TWO WEBS, FRAME OPENING W/ TYPICAL ANGLE SUPPORT FRAME, SEE TYPICAL OPENING IN STEEL DECK DETAIL

A SECTION

TYPICAL DECK SECTION

T20 TYPICAL STEEL JOIST ATTACHMENT
SCALE: NTS

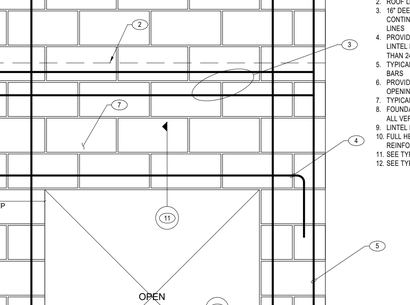

KEYNOTES:
1. STEEL JOIST
2. FOR "K" JOIST PROVIDE 1/8" WELD, FOR "LH" AND "DLH" PROVIDE 1/4" WELD
3. BASE PLATE OR STEEL FRAMING
4. WELD PER PLAN

T17 PLAN - TYPICAL MASONRY JAMB
SCALE: NTS

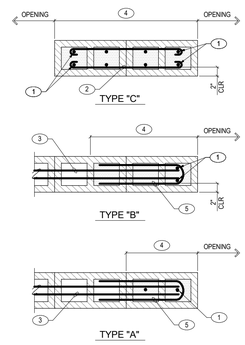

KEYNOTES:
1. VERTICAL BAR
2. (2) #4 HORIZONTAL BARS AT 48" O.C. W/ HOOKS EACH END
3. TYPICAL HORIZONTAL BAR
4. JAMB LENGTH PER PLAN, SOLID GROUT
5. END #4 x 38" LONG (19" EACH LEG) HAIRPIN AT SAME SPACING AS HORIZONTAL REINFORCING

NOTES:
A. PROVIDE FOUNDATION VERTICAL DOWEL TO MATCH AND LAP W/ VERTICAL JAMB REINFORCING

T18 POST-INSTALLED ANCHORS IN MASONRY WALLS
SCALE: NTS

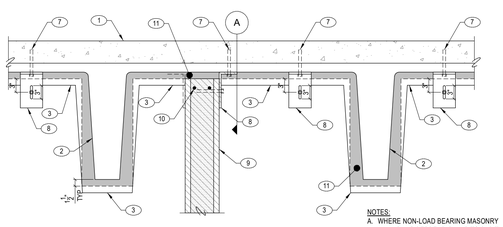

NOTES:
A. WHERE NON-LOAD BEARING MASONRY WALL RUNS PERPENDICULAR TO DLB T FRAMING, CONTRACTOR TO PROVIDE THE SAME ANGLE CONNECTION DETAIL ABOVE. CONTRACTOR TO NOTCH THE TOP OF THE NON-BEARING MASONRY WALL AROUND PRECAST ELEMENTS AS REQUIRED (SEE DASHED LINE)
B. MASONRY WALLS SHOULD NOT BE ATTACHED TO PRECAST STRUCTURE UNTIL CONCRETE TOPPING SLABS HAVE BEEN POURED.

T25 TYPICAL NON-BEARING MASONRY WALL AT PRECAST STRUCTURE
SCALE: NTS

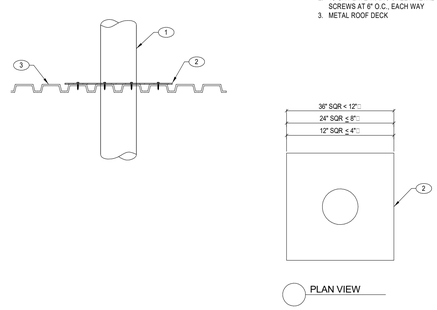

KEYNOTES:
1. PIPE SLEEVE
2. 18 GA PLATE W/ #10 SHEET METAL SCREWS AT 6" O.C., EACH WAY
3. METAL ROOF DECK

T23 TYPICAL PIPE SLEEVE THROUGH ROOF DECK
SCALE: NTS

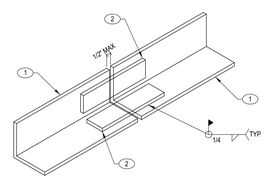

KEYNOTES:
1. STEEL CHORD/EDGE ANGLE - FOR SIZE AND LOCATION, SEE PLAN
2. 8" LONG x 2" x 3/8 " THICK STEEL PLATES

T21 TYPICAL SPLICE IN CONTINUOUS STEEL CHORD/EDGE ANGLE
SCALE: NTS

This drawing is the property of Ridge Structural Engineering, Inc. Legally, the drawing can NOT be copied in whole or in pieces. It is only to be used for the project and site specifically identified hereon and is not to be used on any other project. Contractor shall carefully review all dimensions, details, and conditions and report at once any error, inconsistency or omission discovered before construction. The contractor assumes full liability for deviations from the intent of these plans.

JOB NO.: 24.145 | PROJECT MANAGER: KBB | CAD OPERATOR: GTC

Ridge Structural Engineering
1152 Bond Avenue, Suite B
Rexburg, ID 83440
phone: 208.227.8404
contact@ridgestructural.com

PROFESSIONAL ENGINEER LICENSED 14134 STATE OF IDAHO DAVID B. PORTER 03/17/2025

DATE

PHASE 1 PART B FOR:
TWIN FALLS COUNTY - WRIGHT AVE JAIL
2515 Wright Ave, Twin Falls, ID 83301
TYPICAL DETAILS

Laughlin Ricks Architecture
architecture/planning
134 3RD Ave East * Twin Falls, Idaho 83301
(208) 736-8050

DATE: 03/17/2025
GTC Drawn | KBB Checked
24-145 PROJECT #

S1B-1.3

KEYNOTES:
1. SUPPORTING STEEL
2. 3/16"x1" x CONTINUOUS PLATE EACH SIDE TO SANDWICH MESH
3. STEEL WIRE MESH, SEE ARCH

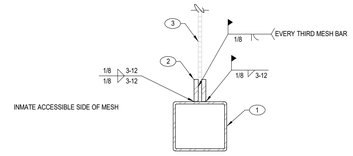

NOTES:
A. MESH PANELS ARE TO BE ATTACHED TO SURROUNDING STEEL ON ALL FOUR SIDES

T28 TYPICAL WELDED WIRE MESH ATTACHMENT
SCALE: NTS

KEYNOTES:
1. CONTROL OR CONSTRUCTION JOINT
2. DEPRESSED CONCRETE SLAB
3. (2) #4 x 4'-0" BARS AT EACH CORNER OF DEPRESSED SLAB WHERE CONTROL / CONSTRUCTION JOINTS DO NOT EXTEND FROM CORNER
4. (2) #4 x 4'-0" BARS WHERE CONTROL/CONSTRUCTION JOINTS DO NOT CONTINUE BEYOND INTERSECTION
5. EXTERIOR WALL CORNER
6. INTERIOR SLAB ON GRADE
7. (2) #4 x 4'-0" AT EXTERIOR WALL CORNER WHERE CONTROL / CONSTRUCTION JOINTS DO NOT INTERSECT CORNER

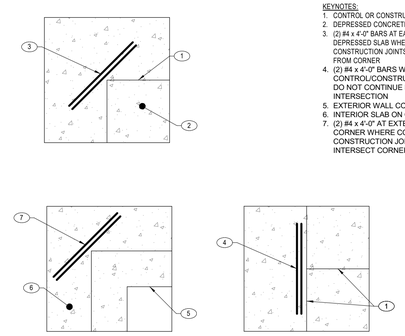

T29 LOCATIONS REQUIRING ADDITIONAL SLAB REINFORCEMENT (PLAN VIEW)
SCALE: NTS

NOMINAL BEAM DEPTH "D"	NUMBER OF BOLTS IN ROW
UP TO 7"	(2) 3/4" DIA
8" TO 10"	(2) 3/4" DIA
12" TO 14"	(3) 3/4" DIA
16"	(4) 3/4" DIA
18"	(5) 3/4" DIA
21"	(6) 3/4" DIA
24" TO 27"	(7) 7/8" DIA
30"	(8) 7/8" DIA
33"	(9) 7/8" DIA
36"	(10) 7/8" DIA

KEYNOTES:
1. SHEAR PLATE TO EQUAL OR EXCEED BEAM WEB THICKNESS 3/8" MIN OR AS SHOWN OTHERWISE
2. 5/16" FOR 21" DEEP BEAMS OR LESS, 3/8" FOR BEAMS 24" OR GREATER
3. 1/2" CLEAR TO FACE OF SUPPORTING MEMBER (TYP)
4. AISC MIN EDGE DISTANCE
5. HORIZONTAL SHORT SLOTTED HOLES AT 3" O.C. MIN IN EITHER BEAM OR SHEAR PLATE PER AISC SPEC

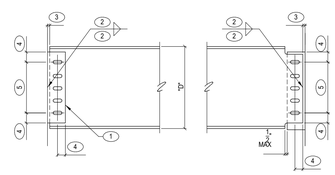

NOTES:
A. TYP CONNECTION CONSISTS OF ONE SHEAR PLATE WITH 3/4" DIA OR 7/8" DIA A325N BOLTS, SEE SCHEDULE
B. MAINTAIN BOLT SPACING AND EDGE DISTANCES PER AISC SPEC

T30 TYPICAL SHEAR PLATE CONNECTION
SCALE: NTS

KEYNOTES:
1. PRECAST CONCRETE WALL PANEL
2. WATERPROOF CAULK PER ARCH
3. PICK-PROOF CAULK PER ARCH

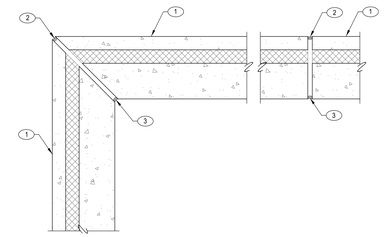

EXTERIOR WALLS

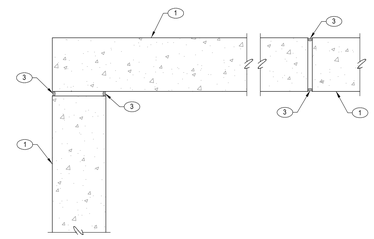

INTERIOR WALLS

NOTES:
A. EXACT WALL PANEL LAYOUT AND JOINT LOCATIONS TO BE COORDINATED DURING PRECAST SUBMITTAL PROCESS.

T26 TYPICAL PRECAST WALL JOINTING
SCALE: NTS

NOTES:
A. SEE ARCH FOR HANDRAIL REQUIREMENTS
B. TROWEL TOP OF FOOTING SMOOTH

KEYNOTES:
1. CONCRETE TOPPING SLAB
2. CONT 1/2"x4" EMBED PLATE W/ 1/2" DIA x 5" LONG HEADED STUDS AT 24" O.C.
3. PRECAST STRUCTURE
4. CONT 1/4" THICK EDGE PLATE, EXTEND 1" PAST STRINGER ON EACH SIDE
5. MC12x31 STRINGER
6. 2" THICK CONCRETE IN 12 GAGE PAN TREADS
7. STRINGER MUST BEAR ON SLAB, PROVIDE 1/4x2" SQR BEARING PLATE, OFFSET PLATE TO BE OUT OF WALKING PATH
8. STEEL MESH PER ARCH, ATTACH TO SURROUNDING STEEL PER TYPICAL DETAIL
9. #4 BAR AT EDGE OF SLAB
10. #4 x 36" LONG DOWELS W/ HOOKED ENDS AT 9" O.C. FOR WIDTH OF STAIRS
11. CONCRETE SLAB ON GRADE, SEE PLAN
12. CONCRETE FOOTING, SEE PLAN
13. COMPACTED SUB-GRADE BELOW FOOTING, SEE PLAN
14. L3x3x1/2 x 0'-8" LONG W/ (2) 5/8" DIA x 5" LONG SCREW ANCHORS (IN 1 1/2" SLOTTED HOLES, HOLES ARE PARALLEL TO STRINGER)
15. HSS3x3x5/16 AT 4'-0" O.C.
16. 1/4" THICK END PLATE
17. HSS3x3x3/16 BEYOND
18. HSS3x3x3/16 TOP RAIL
19. 1/4" THICK WEB STIFFENER ALIGNED W/ COLUMN

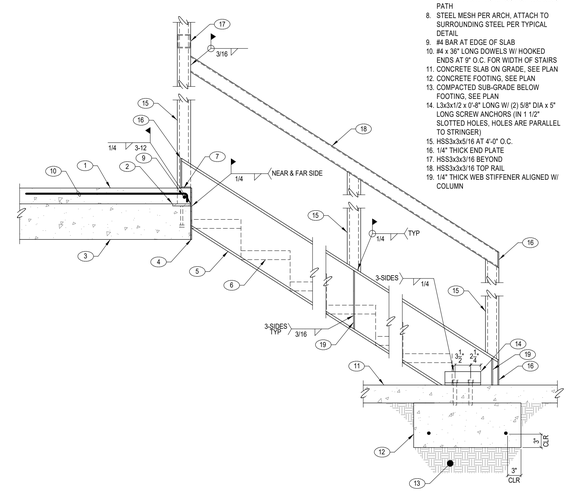

T27 TYPICAL STEEL STAIR DETAIL
SCALE: NTS

This drawing is the property of Ridge Structural Engineering, Inc. Legally, the drawing can NOT be copied in whole or in pieces. It is only to be used for the project and site specifically identified hereon and is not to be used on any other project. Contractor shall carefully review all dimensions, details, and conditions and report at once any error, inconsistency or omission discovered before construction. The contractor assumes full liability for deviations from the intent of these plans.

JOB NO.: 24.145 | PROJECT MANAGER: KBB | CAD OPERATOR: GTC

Ridge Structural Engineering
1152 Bond Avenue, Suite B
Rexburg, ID 83440
phone: 208.227.8404
contact@ridgestructural.com

PROFESSIONAL ENGINEER LICENSED 14134 STATE OF IDAHO DAVID B. PORTER 03/17/2025

DATE

PHASE 1 PART B FOR:
TWIN FALLS COUNTY - WRIGHT AVE JAIL
2515 Wright Ave, Twin Falls, ID 83301
TYPICAL DETAILS

Laughlin Ricks Architecture
architecture/planning
134 3RD Ave East, * Twin Falls, Idaho 83301
(208) 736-8050

DATE: 03/17/2025
GTC Drawn | KBB Checked
24-145 PROJECT #

S1B-1.4

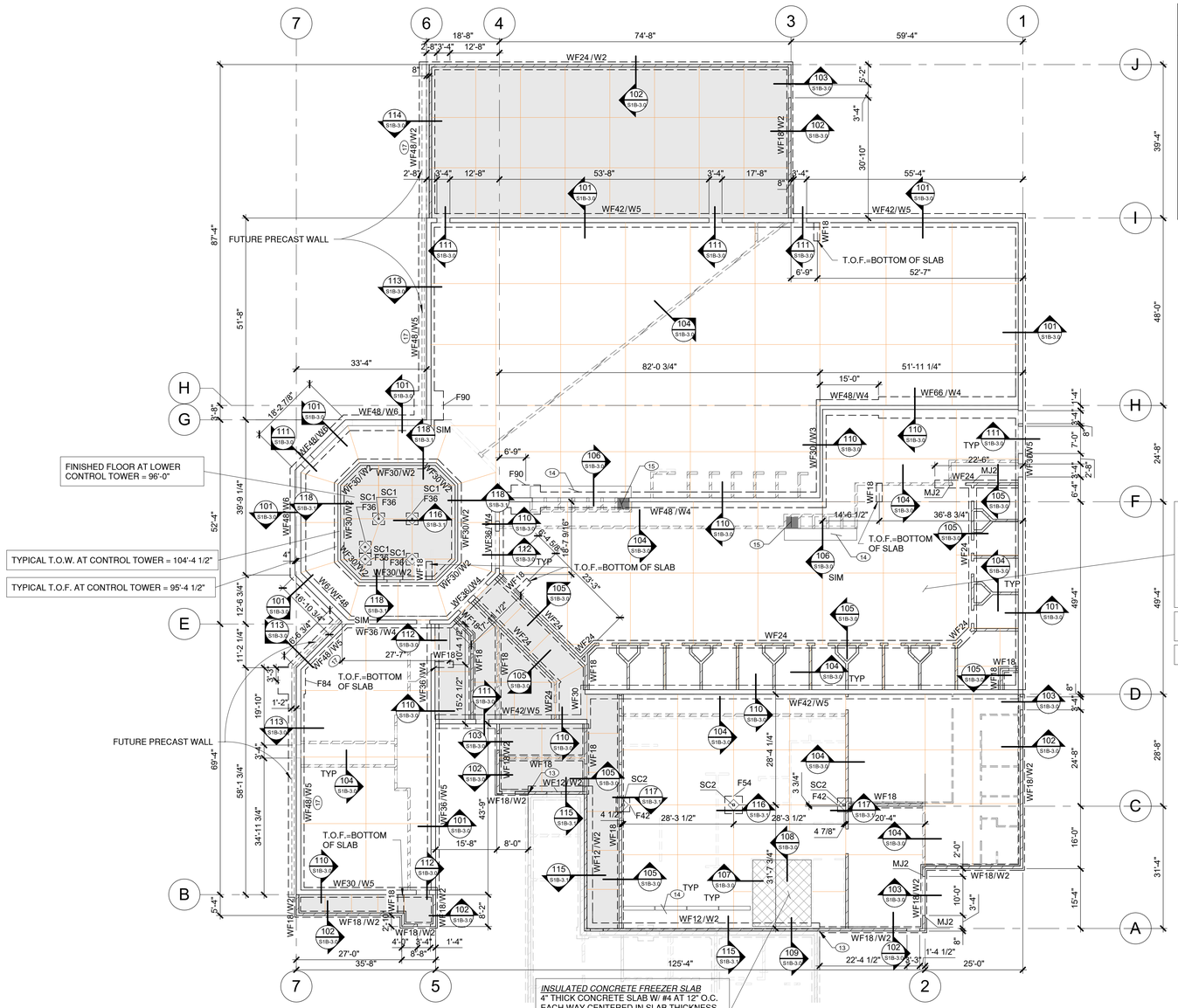

INSULATED CONCRETE FREEZER SLAB
4" THICK CONCRETE SLAB W/ #4 AT 12" O.C. EACH WAY CENTERED IN SLAB THICKNESS. 6" STRUCTURAL SLAB STEPS DOWN TO A F.F.E. OF 99'-2" IN THIS AREA. SEE ARCH AND CORRESPONDING DETAILS.

FINISHED FLOOR = 100'-0" (4" SLAB)

TYPICAL CONCRETE SLAB ON GRADE
6" CONCRETE SLAB ON GRADE W/ #4 AT 12" O.C. EACH WAY CENTERED IN SLAB THICKNESS OVER COMPACTED FILL. (SEE GSN)

AT GRAY HATCHED AREAS SLAB TO BE 4 1/2" THICK W/ #4 AT 12" O.C., EACH WAY, W/ BOTTOM BAR 1 1/2" CLEAR FROM COMPACTED FILL.

PROVIDE SLAB JOINTS PER TYPICAL DETAIL WITHIN 16 HOURS OF BATCH TIME

FINISHED FLOOR = 100'-0", U.N.O.

FOUNDATION PLAN

SCALE: 1/16" = 1'-0"

NORTH

WALL (W) SCHEDULE

TYPE	MATERIAL	THICKNESS	VERTICAL REINFORCING	HORIZONTAL REINFORCING	REMARKS
W1	MASONRY	8"	#5 AT 8" O.C.	(2) #4 AT 48" O.C.	SOLID GROUTED
W2	CONCRETE	8"	#4 AT 18" O.C.	#4 AT 12" O.C.	SEE DETAILS FOR HOOKED DOWEL INTO FOOTING
W3	PRECAST CONCRETE	8"	DEFERRED	DEFERRED	SOLID CONCRETE
W4	PRECAST CONCRETE	12"	DEFERRED	DEFERRED	SOLID CONCRETE
W5	PRECAST CONCRETE	14"	DEFERRED	DEFERRED	8" CORE, 3" INSULATION, 3" FINISH
W6	PRECAST CONCRETE	18"	DEFERRED	DEFERRED	12" CORE, 3" INSULATION, 3" FINISH

FOOTING SCHEDULE

MARK	LENGTH	WIDTH	THICKNESS	REINFORCING	REMARKS
F36	36"	36"	14"	(4) #4 EACH WAY BOTTOM	---
F42	42"	42"	14"	(5) #4 EACH WAY BOTTOM	---
F54	54"	54"	14"	(7) #4 EACH WAY BOTTOM	---
F84	84"	84"	18"	(8) #5 EACH WAY BOTTOM	
F90	90"	90"	18"	(9) #5 EACH WAY BOTTOM	
WF12	CONT	12"	14"	(2) #4 CONT W/ #4 AT 18" O.C. TRANSVERSE, BOTTOM	ATTACHED TO EXISTING FOOTING
WF18	CONT	18"	12"	(2) #4 CONT BOTTOM	STRIP FOOTING
WF24	CONT	24"	12"	(3) #4 CONT BOTTOM	STRIP FOOTING
WF30	CONT	30"	14"	(2) #4 CONT W/ #5 AT 16" O.C. TRANSVERSE, TOP AND BOTTOM	STRIP FOOTING SEE DETAILS FOR HOOKED DOWEL INTO WALL
WF36	CONT	36"	14"	(3) #4 CONT W/ #5 AT 16" O.C. TRANSVERSE, TOP AND BOTTOM	STRIP FOOTING
WF42	CONT	42"	14"	(4) #4 CONT W/ #5 AT 16" O.C. TRANSVERSE, TOP AND BOTTOM	STRIP FOOTING
WF48	CONT	48"	16"	(5) #4 CONT W/ #5 AT 16" O.C. TRANSVERSE, TOP AND BOTTOM	STRIP FOOTING
WF66	CONT	66"	16"	(6) #4 CONT W/ #5 AT 12" O.C. TRANSVERSE, TOP AND BOTTOM	STRIP FOOTING

FOUNDATION PLAN NOTES

A. VERIFY ALL DIMENSIONS WITH ALL ARCHITECTURAL DRAWINGS.
B. ALL SCHEDULED MARK DESIGNATIONS MAY NOT NECESSARILY BE FOUND ON THIS PLAN. SCHEDULES ARE TYPICAL TO THIS PROJECT.
C. THE DEPTH OF FOOTING DIMENSION INDICATED IN THE G.S.N. IS A MINIMUM. FOUNDATION CONTRACTOR SHALL COORDINATE WITH THE SOILS REPORT AND OTHER TRADES TO INSURE THAT THESE MINIMUMS ARE SUFFICIENT FOR THE WORK. SEE TYPICAL DETAILS FOR ADDITIONAL REQUIREMENTS.
D. W1, W2, ETC. - AS SHOWN ON PLAN INDICATES CONCRETE OR MASONRY WALLS. SEE WALL SCHEDULE FOR ADDITIONAL INFORMATION.
E. WF18, WF24, ETC. - AS SHOWN ON PLAN INDICATES A CONTINUOUS WALL FOOTING. SEE FOOTING SCHEDULE FOR ADDITIONAL INFORMATION.
F. F36, F48, ETC. - AS SHOWN ON PLAN INDICATES A CONCRETE FOOTING. SEE FOOTING SCHEDULE FOR ADDITIONAL INFORMATION.
G. SC1, SC2, ETC. - AS SHOWN ON PLAN INDICATES A STEEL COLUMN. SEE STEEL COLUMN SCHEDULE FOR ADDITIONAL INFORMATION. COLUMNS START AT THE LEVEL THEY ARE CALLED OUT ON.
H. MJ1, MJ2, ETC. - AS SHOWN ON PLAN INDICATES A MASONRY JAMB. SEE JAMB SCHEDULE FOR ADDITIONAL INFORMATION. ALL OPENINGS SHALL HAVE 'MJ1' TYPE JAMBS EACH SIDE OF OPENING U.N.O. ON DRAWINGS.
I. FOR SIDEWALK AND LANDING LOCATIONS, SEE ARCHITECTURAL DRAWINGS.
J. TYPICAL TOP OF CAST-IN-PLACE CONCRETE FOUNDATION WALL = 100'-0"
K. TYPICAL TOP OF EXTERIOR FOOTING AND ALL INTERIOR FOOTINGS SUPPORTING PRECAST WALLS = 98'-0"
L. TYPICAL TOP OF INTERIOR FOOTING = 99'-2"
M. THE SIZE OF FOOTINGS SUPPORTING PRECAST STRUCTURE ARE PRELIMINARY AND ARE TO BE VERIFIED BY STRUCTURAL ENGINEER OF RECORD DURING THE PRECAST SUBMITTAL REVIEW PROCESS AND PRIOR TO FOOTING CONSTRUCTION
N. COORDINATE W/ ARCHITECTURAL AND PLUMBING DRAWINGS FOR LOCATIONS OF FLOOR DRAINS.

KEYNOTES

(X)	
13	DRILL AND EPOXY NEW FOOTING/WALL REINFORCEMENT INTO EXISTING W/ 4" EMBEDMENT
14	TROUGH DRAIN IN SLAB, SLOPE PER ARCH/MECH DRAWINGS
15	RECESS SLAB 2" AT ADA SHOWERS, COORDINATE W/ ARCH
17	STRIP FOOTING CENTERED ON GRIDLINE (FACE OF PRECAST WALL), NOT WALL, SEE DETAIL

STEEL COLUMN (SC) SCHEDULE

MARK	SIZE	BASE CONNECTION
SC1	HSS4x4x1/4	SEE DETAILS
SC2	HSS6x6x5/16	SEE DETAILS
SC3	HSS3x3x3/16	SEE DETAILS

MASONRY JAMB (MJ) SCHEDULE

SEE TYPICAL JAMB DETAIL FOR ADDITIONAL INFORMATION

MARK	REBAR AND QUANTITIES	TYPE	LENGTH	REMARKS
MJ1	(2) #5	A	16"	REBAR CENTERED
MJ2	(4) #5	B	16"	REBAR EACH FACE

PROFESSIONAL ENGINEER LICENSED 14134 STATE OF IDAHO DAVID B. PORTER 03/17/2025

DATE

PHASE 1 PART B FOR:
TWIN FALLS COUNTY - WRIGHT AVE JAIL
2515 Wright Ave, Twin Falls, ID 83301
FOUNDATION PLAN

Laughlin Ricks Architecture
architecture/planning
134 3RD Ave East, * Twin Falls, Idaho 83301
(208) 736-8050

DATE: 03/17/2025
GTC Drawn
KBB Checked
24-145 PROJECT #

S1B-2.0

This drawing is the property of Ridge Structural Engineering, Inc. Legally, the drawing can NOT be copied in whole or in pieces. It is only to be used for the project and site specifically identified hereon and is not to be used on any other project. Contractor shall carefully review all dimensions, details, and conditions and report at once any error, inconsistency or omission discovered before construction. The contractor assumes full liability for deviations from the intent of these plans.

JOB NO.: 24.145 | PROJECT MANAGER: KBB | CAD OPERATOR: GTC

Ridge Structural Engineering
1152 Bond Avenue, Suite B
Rexburg, ID 83440
phone: 208.227.8404
contact@ridgestructural.com

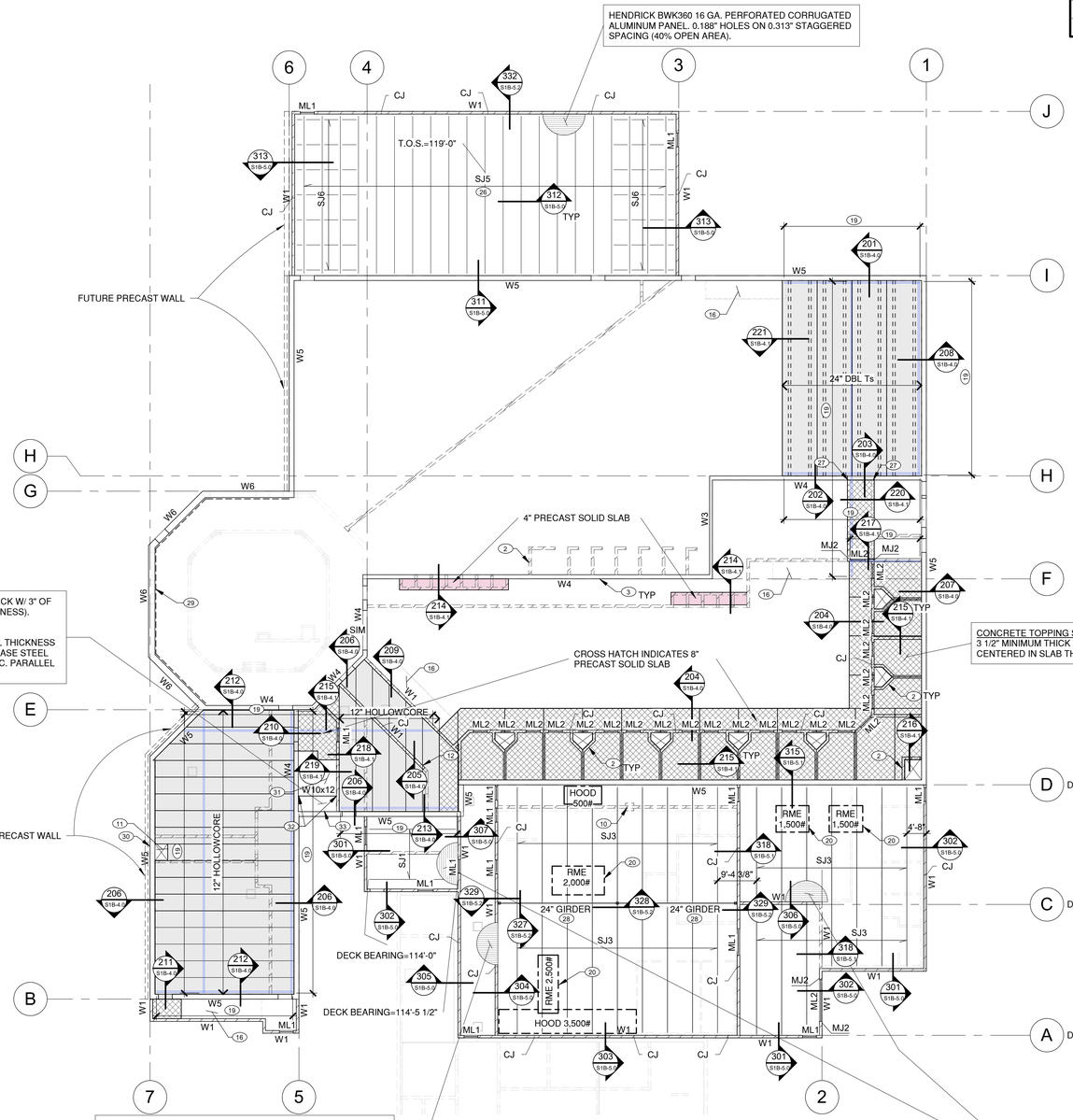

16 GAGE VERCO PLW3-36 FORMLOK COMPOSITE DECK W/ 3" OF NORMAL-WEIGHT CONCRETE (6" TOTAL SLAB THICKNESS). REINFORCE SLAB W/ WWF 6x6-W1.4xW1.4.

DECK W/ HILTI HSN-24 FASTENERS FOR BASE STEEL THICKNESS 1/8"≤ tf ≤ 3/8". USE HILTI X-ENP 19 FASTENERS FOR BASE STEEL THICKNESS ≥ 1/4. ATTACHMENT PATERN: 36/4 14" O.C. PARALLEL SUPPORTS, 24" O.C. PUNCHLOK SIDELAP

CONCRETE TOPPING SLAB (OVER HOLLOWCORE AND PRECAST SOLID SLABS) 3 1/2" MINIMUM THICK CONCRETE SLAB W/ #3 AT 16" O.C. EACH WAY CENTERED IN SLAB THICKNESS

22 GAGE VERCO PLN3-32 STEEL DECK W/ HILTI HSN-24 FASTENERS FOR BASE STEEL THICKNESS 1/8"≤ tf ≤ 3/8". USE HILTI X-ENP 19 FASTENERS FOR BASE STEEL THICKNESS ≥ 1/4. ATTACHMENT PATTERN: 32/5 14" O.C. PARALLEL SUPPORTS, 24" O.C. PUNCHLOK SIDELAP. DECKING SHALL BE DOUBLE SPAN MIN.

20 GAGE VERCO PLB-36 STEEL DECK W/ HILTI HSN-24 FASTENERS FOR BASE STEEL THICKNESS 1/8"≤ tf ≤ 3/8". USE HILTI X-ENP 19 FASTENERS FOR BASE STEEL THICKNESS ≥ 1/4. ATTACHMENT PATTERN: 36/4 14" O.C. PARALLEL SUPPORTS, 24" O.C. PUNCHLOK SIDELAP. DECKING SHALL BE DOUBLE SPAN MIN.

WALL (W) SCHEDULE

TYPE	MATERIAL	THICKNESS	VERTICAL REINFORCING	HORIZONTAL REINFORCING	REMARKS
W1	MASONRY	8"	#5 AT 8" O.C.	(2) #4 AT 48" O.C.	SOLID GROUTED
W2	CONCRETE	8"	#4 AT 18" O.C.	#4 AT 12" O.C.	SEE DETAILS FOR HOOKED DOWEL INTO FOOTING
W3	PRECAST CONCRETE	8"	DEFERRED	DEFERRED	SOLID CONCRETE
W4	PRECAST CONCRETE	12"	DEFERRED	DEFERRED	SOLID CONCRETE
W5	PRECAST CONCRETE	14"	DEFERRED	DEFERRED	8" CORE, 3" INSULATION, 3" FINISH
W6	PRECAST CONCRETE	18"	DEFERRED	DEFERRED	12" CORE, 3" INSULATION, 3" FINISH

MASONRY LINTEL (ML) SCHEDULE

MARK	SIZE	LONGITUDINAL REINFORCING	VERTICAL TIES
ML1	16" DEEP	(2) #4 BARS TOP AND BOTTOM	MATCH WALL REINFORCING
ML2	24" DEEP	(2) #4 BARS TOP AND BOTTOM	MATCH WALL REINFORCING

STEEL JOIST (SJ) SCHEDULE

MARK	JOIST SIZE / TYPE AND LOADING	JOIST SPACING (O.C.)
SJ1	16K 270/150	6'-0"
SJ2	24K 270/150	6'-0"
SJ3	28K 270/150	6'-0"
SJ4	30K 270/150	6'-0"
SJ5	HSS16x4x3/16 GALVANIZED	4'-4"
SJ6	HSS3x3x3/16 GALVANIZED	6'-0"

MASONRY JAMB (MJ) SCHEDULE

SEE TYPICAL JAMB DETAIL FOR ADDITIONAL INFORMATION

MARK	REBAR AND QUANTITIES	TYPE	LENGTH	REMARKS
MJ1	(2) #5	A	16"	REBAR CENTERED
MJ2	(4) #5	B	16"	REBAR EACH FACE

STEEL COLUMN (SC) SCHEDULE

MARK	SIZE	BASE CONNECTION
SC1	HSS4x4x1/4	SEE DETAILS
SC2	HSS6x6x5/16	SEE DETAILS
SC3	HSS3x3x3/16	SEE DETAILS

FLOOR/ROOF FRAMING PLAN NOTES

A. VERIFY ALL DIMENSIONS WITH ALL ARCHITECTURAL DRAWINGS.
B. ALL SCHEDULED MARK DESIGNATIONS MAY NOT NECESSARILY BE FOUND ON THIS PLAN. SCHEDULES ARE TYPICAL TO THIS PROJECT.
C. W1, W2, ETC. - AS SHOWN ON PLAN INDICATES CONCRETE OR MASONRY WALLS. SEE WALL SCHEDULE FOR ADDITIONAL INFORMATION. ALL UNLABELED MASONRY WALLS TO BE TYPE 'W1' WALLS.
D. ML1, ML2, ETC. - AS SHOWN ON PLAN INDICATES A MASONRY LINTEL. SEE LINTEL SCHEDULE FOR ADDITIONAL INFORMATION. LINTELS FOR MISC. (UNLABELED) OPENINGS MAY BE 16" DEEP W/ (1) #4 BAR TOP AND BOTTOM.
E. SJ1, SJ2, ETC. - AS SHOWN ON PLAN INDICATES A STEEL JOIST. SEE STEEL JOIST SCHEDULE FOR ADDITIONAL INFORMATION.
F. CJ - AS SHOWN ON PLAN INDICATES A CONTROL JOINT IN A CONCRETE OR MASONRY WALL. SEE GSN AND TYPICAL DETAIL. LOCATIONS SHOWN ARE CONCEPTUAL, VERIFY EXACT PLACEMENT W/ ARCH.
G. MJ1, MJ2, ETC. - AS SHOWN ON PLAN INDICATES A MASONRY JAMB. SEE JAMB SCHEDULE FOR ADDITIONAL INFORMATION. ALL OPENINGS SHALL HAVE 'MJ1' TYPE JAMBS EACH SIDE OF OPENING U.N.O. ON DRAWINGS.
H. FOR CLARITY, DETAILS MAY SHOW ONLY ONE SIDE OF FRAMING CONDITION.
I. FOR CLARITY, ALL ROOF OPENINGS MAY NOT BE SHOWN ON THE ROOF FRAMING PLAN. FOR EXACT SIZE, NUMBER AND LOCATION OF THE OPENINGS, SEE ARCHITECTURAL, MECANICAL, PLUMBING, AND ELECTRICAL DRAWINGS. FOR FRAMING AT OPENINGS, SEE TYPICAL DETAILS.
K. VERIFY EXACT SIZE AND WEIGHT OF EQUIPMENT ON ROOF WITH MECHANICAL DRAWINGS.
L. ALL "K" TYPE JOISTS SHALL HAVE A SHOE DEPTH OF 2 1/2". GIRDER JOISTS TO HAVE A 7 1/2" SHOE DEPTH. THE JOIST MANUFACTURER SHALL DESIGN ALL JOISTS AND THE SHOES FOR AN AXIAL TENSION (T) OR COMPRESSION (C) LOAD OF 4,300# (UNFACTORED, SEISMIC) DUE TO OUT-OF-PLANE LOADS, UNLESS LARGER LOAD IS INDICATED ON PLANS.
M. DESIGN ROOF JOISTS FOR DRIFTING SNOW LOAD AND WIND UPLIFT LOADS SHOWN ON S1B-6.0
N. RME: INDICATES HVAC EQUIPMENT ON ROOF. SEE TYPICAL DETAILS FOR FRAMING INFORMATION.
O. CONTRACTOR TO VERIFY AND BE RESPONSIBLE FOR VARIATIONS IN CONCRETE QUANTITY DUE TO CAMBER, CONSTRUCTION DEAD LOAD DEFLECTIONS AND/OR STRUCTURAL STEEL TOLERANCES OF STEEL BEAMS, STEEL DECK AND PRECAST CONCRETE STRUCTURE.
P. BRACE TOPS OF NON-BEARING MASONRY WALLS TO BOTTOM OF FLOOR OR ROOF PER TYPICAL DETAILS.
Q. SOME WALL PANELS WILL REQUIRE SLEEVES FOR ROUTING OF OTHER TRADES WITHIN THE WALL CAVITY. THE RESPONSIBLE SUBCONTRACTOR (I.E. ELECTRICAL SUB) SHALL BE RESPONSIBLE FOR THE LOCATION AND PLACEMENT OF THESE SLEEVES. THIS INVOLVES COORDINATING WITH THE PRECASTER TO GO TO THEIR SHOP AND LOCATE THE SLEEVES PRIOR TO CONCRETE BEING POURED.

KEYNOTES

(X)	
2	WALL SLEEVE IN MASONRY FOR TOILET FIXTURE, SEE PLUMBING (TYP)
3	DO NOT LOCATE ANY REINFORCING IN THE PRECAST WALL BEHIND TOILET FIXTURES TO ALLOW FOR FUTURE CORE DRILLING AND INSTALLING OF PLUMBING FIXTURE. COORDINATE WITH PLUMBING DRAWINGS FOR CLEAR WIDTH REQUIREMENT (TYP).
10	COORDINATE BLOCKOUT IN TOP OF WALL FOR MECHANICAL PENETRATION
11	36" x 48" MECHANICAL CHASE. HOLLOWCORE STOPPED SHORT OF WALL AND SUPPORTED OFF OF ADJACENT PANELS
12	STEP IN TOP OF MASONRY WALL FROM BEARING TO NON-BEARING CONDITION
16	SEE TYPICAL STEEL STAIR DETAIL
19	PROVIDE (3) #4 BARS AT 2" O.C. SPACING IN TOPPING SLAB FOR LENGTH SHOWN
20	PROVIDE STEEL ANGLE FRAME BELOW ROOFTOP UNIT, SEE TYPICAL DETAIL
26	DRILL 1/2" DIA. HOLE IN BOTTOM OF ALL BEAMS AT CENTER OF SPAN.
27	DRILL AND EPOXY MASONRY WALL BOND BEAM REINFORCING SHOWN IN DETAIL 220/S1B-4.1 INTO PRECAST WALL W/ 4" EMBEDMENT.
28	JOIST LAYOUT IS NOT SYMMETRICAL ON GIRDER
29	SEE SHEETS A1B-8.0 AND A1B-8.1 FOR LOCATIONS OF FUTURE OPENINGS IN THESE (4) PRECAST WALL PANELS SEGMENTS. PRECASTER TO DESIGN WALL PANELS IN SUCH A WAY TO ALLOW FOR FUTURE OPENINGS TO BE SAW CUT OUT. PROVIDE A REVEAL ON THE INSIDE OF THE WALL PANELS OUTLINING THE PERIMETER OF THE FUTURE OPENINGS.
30	FUTURE OPENING IN PRECAST WALL, PROVIDE REVEAL ON INSIDE OF WALL PANEL OUTLINING PERIMTER OF OPENING
31	STAIR STRINGERS, PANS, AND TREADS TO BE OF SAME CONSTRUCTION AS SHOWN IN TYPICAL STEEL STAIR DETAIL.
32	STAIR LANDING BEAM ATTACHED TO WALL W/ SAME EMBED PLATE AS SHOWN IN DETAIL 119/S1B-3.1.
33	PROVIDE CONT L4x4x1/4 DECK LEDGER BOLTED TO WALL W/ 5/8" x 5" SCREW ANCHORS AT 16" O.C.

MEZZANINE FLOOR AND LOW ROOF FRAMING PLAN

SCALE: 1/16" = 1'-0"

NORTH

This drawing is the property of Ridge Structural Engineering, Inc. Legally, the drawing can NOT be copied in whole or in pieces. It is only to be used for the project and site specifically identified hereon and is not to be used on any other project. Contractor shall carefully review all dimensions, details, and conditions and report at once any error, inconsistency or omission discovered before construction. The contractor assumes full liability for deviations from the intent of these plans.

JOB NO.: 24.145 | PROJECT MANAGER: KBB | CAD OPERATOR: GTC

Ridge Structural Engineering
1152 Bond Avenue, Suite B
Rexburg, ID 83440
phone: 208.227.8404
contact@ridgestructural.com

PROFESSIONAL ENGINEER LICENSED 14134 STATE OF IDAHO DAVID B. PORTER 03/17/2025

DATE:

PHASE 1 PART B FOR:
TWIN FALLS COUNTY - WRIGHT AVE JAIL
2515 Wright Ave, Twin Falls, ID 83301
MEZZANINE FLOOR AND LOW ROOF FRAMING PLAN

Laughlin Ricks Architecture
architecture/planning
134 3RD Ave East, * Twin Falls, Idaho 83301
(208) 736-8050

DATE: 03/17/2025
GTC Drawn | KBB Checked
24-145 PROJECT #

S1B-2.1

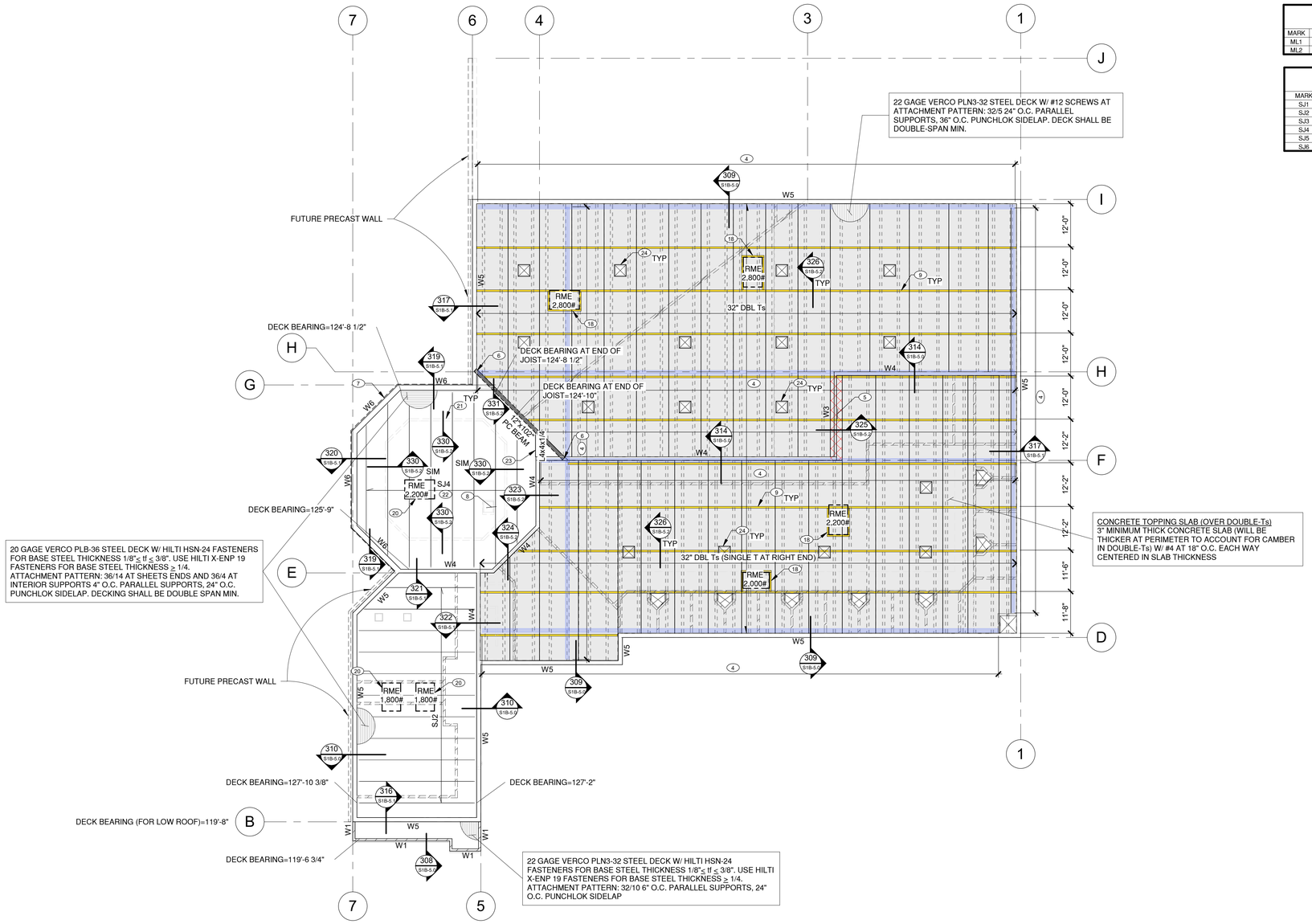

WALL (W) SCHEDULE

TYPE	MATERIAL	THICKNESS	VERTICAL REINFORCING	HORIZONTAL REINFORCING	REMARKS
W1	MASONRY	8"	#5 AT 8" O.C.	(2) #4 AT 48" O.C.	SOLID GROUTED
W2	CONCRETE	8"	#4 AT 18" O.C.	#4 AT 12" O.C.	SEE DETAILS FOR HOOKED DOWEL INTO FOOTING
W3	PRECAST CONCRETE	8"	DEFERRED	DEFERRED	SOLID CONCRETE
W4	PRECAST CONCRETE	12"	DEFERRED	DEFERRED	SOLID CONCRETE
W5	PRECAST CONCRETE	14"	DEFERRED	DEFERRED	8" CORE, 3" INSULATION, 3" FINISH
W6	PRECAST CONCRETE	18"	DEFERRED	DEFERRED	12" CORE, 3" INSULATION, 3" FINISH

MASONRY LINTEL (ML) SCHEDULE

MARK	SIZE	LONGITUDINAL REINFORCING	VERTICAL TIES
ML1	16" DEEP	(2) #4 BARS TOP AND BOTTOM	MATCH WALL REINFORCING
ML2	24" DEEP	(2) #4 BARS TOP AND BOTTOM	MATCH WALL REINFORCING

STEEL JOIST (SJ) SCHEDULE

MARK	JOIST SIZE / TYPE AND LOADING	JOIST SPACING (O.C.)
SJ1	16K 270/150	6'-0"
SJ2	24K 270/150	6'-0"
SJ3	28K 270/150	6'-0"
SJ4	30K 270/150	6'-0"
SJ5	HSS16x4x3/16 GALVANIZED	4'-4"
SJ6	HSS3x3x3/16 GALVANIZED	6'-0"

ROOF FRAMING PLAN NOTES

A. VERIFY ALL DIMENSIONS WITH ALL ARCHITECTURAL DRAWINGS.
B. ALL SCHEDULED MARK DESIGNATIONS MAY NOT NECESSARILY BE FOUND ON THIS PLAN. SCHEDULES ARE TYPICAL TO THIS PROJECT.
C. W1, W2, ETC. - AS SHOWN ON PLAN INDICATES CONCRETE OR MASONRY WALLS. SEE WALL SCHEDULE FOR ADDITIONAL INFORMATION. ALL UNLABELED MASONRY WALLS TO BE TYPE 'W1' WALLS.
D. ML1, ML2, ETC. - AS SHOWN ON PLAN INDICATES A MASONRY LINTEL. SEE LINTEL SCHEDULE FOR ADDITIONAL INFORMATION.
E. SJ1, SJ2, ETC. - AS SHOWN ON PLAN INDICATES A STEEL JOIST. SEE STEEL JOIST SCHEDULE FOR ADDITIONAL INFORMATION.
F. FOR CLARITY, DETAILS MAY SHOW ONLY ONE SIDE OF FRAMING CONDITION.
G. FOR CLARITY, ALL ROOF OPENINGS MAY NOT BE SHOWN ON THE ROOF FRAMING PLAN. FOR EXACT SIZE, NUMBER AND LOCATION OF OPENINGS, SEE ARCHITECTURAL, MECHANICAL, PLUMBING, AND ELECTRICAL DRAWINGS. FOR FRAMING AT OPENINGS, SEE TYPICAL DETAILS.
H. VERIFY EXACT SIZE AND WEIGHT OF EQUIPMENT ON ROOF WITH MECHANICAL DRAWINGS.
I. ALL "K" TYPE JOISTS SHALL HAVE A SHOE DEPTH OF 2 1/2". GIRDER/JOISTS TO HAVE A 7 1/2" SHOE DEPTH. THE JOIST MANUFACTURER SHALL DESIGN ALL JOISTS AND THE SHOES FOR AN AXIAL TENSION (T) OR COMPRESSION (C) LOAD OF 4,300# (UNFACTORED, SEISMIC) DUE TO OUT-OF-PLANE LOADS, UNLESS LARGER LOAD IS INDICATED ON PLANS.
J. DESIGN ROOF JOISTS FOR DRIFTING SNOW LOAD AND WIND UPLIFT LOADS SHOWN ON S1B-6.0
K. RME: INDICATES HVAC EQUIPMENT ON ROOF. SEE TYPICAL DETAILS FOR FRAMING INFORMATION.
M. CONTRACTOR TO VERIFY AND BE RESPONSIBLE FOR VARIATIONS IN CONCRETE QUANTITY DUE TO CAMBER, CONSTRUCTION DEAD LOAD DEFLECTIONS AND/OR STRUCTURAL STEEL TOLERANCES OF STEEL BEAMS, STEEL DECK AND PRECAST CONCRETE STRUCTURE.
N. BRACE TOPS OF NON-BEARING MASONRY WALLS TO BOTTOM OF FLOOR OR ROOF PER TYPICAL DETAILS.
O. SOME WALL PANELS WILL REQUIRE SLEEVES FOR ROUTING OF OTHER TRADES WITHIN THE WALL CAVITY. THE RESPONSIBLE SUBCONTRACTOR (I.E. ELECTRICAL SUB) SHALL BE RESPONSIBLE FOR THE LOCATION AND PLACEMENT OF THESE SLEEVES. THIS INVOLVES COORDINATING WITH THE PRECASTER TO GO TO THEIR SHOP AND LOCATE THE SLEEVES PRIOR TO CONCRETE BEING POURED.

KEYNOTES

(X)	
4	PROVIDE (8) #4 BARS AT 2' O.C. SPACING IN TOPPING SLAB FOR LENGTH SHOWN
5	CONTRACTOR TO PROVIDE TEMPORARY FORMWORK BETWEEN WALL AND DBL T FLANGE FOR TOPPING SLAB POUR
6	BEAM SITS ON CORBEL AT WALL
7	CONT EMBED PROVIDED ALONG THESE WALLS FOR FUTURE PRECAST STRUCTURE ATTACHMENT, SEE CORRESPONDING DETAILS.
8	ROOFTOP ACCESS. COORDINATE SIZE AND LOCATION PER ARCH. REINFORCE OPENING PER TYPICAL DETAIL
9	YELLOW LINES INDICATE PONY WALLS FRAMED W/ 600S162-43 STUDS AT 24" O.C. W/ 600T125-43 TRACK TOP AND BOTTOM. AS REQUIRED PROVIDE (2)600S162-43 HEADER BOXED W/ TRACK TOP AND BOTTOM TO PROVIDE A MAXIMUM 42" WIDE OPENING IN WALL FOR DUCT PASSAGE.
18	FRAME TYPICAL PONY WALLS BELOW PERIMETER OF ROOFTOP UNIT. COORDINATE WALL PLACEMENT AND SIZE OF OPENING IN DECK W/ HVAC CONTRACTOR.
20	PROVIDE STEEL ANGLE FRAME BELOW ROOFTOP UNIT, SEE TYPICAL DETAIL
21	JOIST MANUFACTURER TO APPLY AN ADDITIONAL LINE LOAD OF 175 PLF (DEAD) ALONG PERIMETER OF CONTROL ROOM WALLS BELOW WHICH WILL BE SUSPENDED FROM ROOF DECK.
22	JOIST MANUFACTURER TO LIMIT LIVE LOAD DEFLECTION OF THESE JOISTS TO A MAXIMUM OF 3/8"
23	EXTEND STEEL LEDGER ANGLE THAT IS ATTACHED TO WALL PARALLEL TO STEEL JOISTS ACROSS THIS SPAN AND ATTACH TAPERED BENT PLATE (THAT SITS ON PRECAST BEAM) W/ 3/16" FILLET WELD ALL-AROUND
24	SKYLIGHT PER ARCH. FRAME PONY WALLS W/ 362S162-43 STUDS AT 12" O.C. AND 362T125-43 TRACK TOP AND BOTTOM AROUND OPENING IN STEEL DECK TO SUPPORT DECK.

ROOF FRAMING PLAN

SCALE: 1/16" = 1'-0"

NORTH

This drawing is the property of Ridge Structural Engineering, Inc. Legally, the drawing can NOT be copied in whole or in part without the written consent of the Structural Engineer. Contractor shall verify and be responsible for all dimensions on this project. Contractor shall carefully review all dimensions, details, and conditions and report at once any error, inconsistency or omission discovered before construction. The contractor assumes full liability for deviations from the intent of these plans.

JOB NO.: 24.145 | PROJECT MANAGER: KBB | CAD OPERATOR: GTC

Ridge Structural Engineering
1152 Bond Avenue, Suite B
Rexburg, ID 83440
phone: 208.227.8404
contact@ridgestructural.com

PROFESSIONAL ENGINEER LICENSED 14134 STATE OF IDAHO DAVID B. PORTER 03/17/2025

DATE

PHASE 1 PART B FOR:
TWIN FALLS COUNTY - WRIGHT AVE JAIL
2515 Wright Ave, Twin Falls, ID 83301
ROOF FRAMING PLAN

Laughlin Ricks Architecture
architecture/planning
134 3RD Ave East * Twin Falls, Idaho 83301
(208) 736-8050

DATE: 03/17/2025
GTC Drawn | KBB Checked
24-145 PROJECT #

S1B-2.2

MASONRY JAMB (MJ) SCHEDULE

SEE TYPICAL JAMB DETAIL FOR ADDITIONAL INFORMATION

MARK	REBAR AND QUANTITIES	TYPE	LENGTH	REMARKS
MJ1	(2) #5	A	16"	REBAR CENTERED
MJ2	(4) #5	B	16"	REBAR EACH FACE

MASONRY LINTEL (ML) SCHEDULE

MARK	SIZE	LONGITUDINAL REINFORCING	VERTICAL TIES
ML1	16" DEEP	(2) #4 BARS TOP AND BOTTOM	MATCH WALL REINFORCING
ML2	24" DEEP	(2) #4 BARS TOP AND BOTTOM	MATCH WALL REINFORCING

STEEL JOIST (SJ) SCHEDULE

MARK	JOIST SIZE / TYPE AND LOADING	JOIST SPACING (O.C.)
SJ1	16K 270/150	6'-0"
SJ2	24K 270/150	6'-0"
SJ3	28K 270/150	6'-0"
SJ4	30K 270/150	6'-0"
SJ5	HSS16x4x3/16 GALVANIZED	4'-4"
SJ6	HSS3x3x3/16 GALVANIZED	6'-0"

FLOOR/ROOF FRAMING PLAN NOTES

A. VERIFY ALL DIMENSIONS WITH ALL ARCHITECTURAL DRAWINGS.
B. ALL SCHEDULED MARK DESIGNATIONS MAY NOT NECESSARILY BE FOUND ON THIS PLAN. SCHEDULES ARE TYPICAL TO THIS PROJECT.
C. W1, W2, ETC. - AS SHOWN ON PLAN INDICATES CONCRETE OR MASONRY WALLS. SEE WALL SCHEDULE FOR ADDITIONAL INFORMATION. ALL UNLABELED MASONRY WALLS TO BE TYPE 'W1' WALLS.
D. ML1, ML2, ETC. - AS SHOWN ON PLAN INDICATES A MASONRY LINTEL. SEE LINTEL SCHEDULE FOR ADDITIONAL INFORMATION. LINTELS FOR MISC. (UNLABELED) OPENINGS MAY BE 16" DEEP W/ (1) #4 BAR TOP AND BOTTOM.
E. SJ1, SJ2, ETC. - AS SHOWN ON PLAN INDICATES A STEEL JOIST. SEE STEEL JOIST SCHEDULE FOR ADDITIONAL INFORMATION.
F. CJ - AS SHOWN ON PLAN INDICATES A CONTROL JOINT IN A CONCRETE OR MASONRY WALL. SEE GSN AND TYPICAL DETAIL. LOCATIONS SHOWN ARE CONCEPTUAL, VERIFY EXACT PLACEMENT W/ ARCH.
G. MJ1, MJ2, ETC. - AS SHOWN ON PLAN INDICATES A MASONRY JAMB. SEE JAMB SCHEDULE FOR ADDITIONAL INFORMATION. ALL OPENINGS SHALL HAVE 'MJ1' TYPE JAMBS EACH SIDE OF OPENING U.N.O. ON DRAWINGS.
H. FOR CLARITY, DETAILS MAY SHOW ONLY ONE SIDE OF FRAMING CONDITION.
I. FOR CLARITY, ALL ROOF OPENINGS MAY NOT BE SHOWN ON THE ROOF FRAMING PLAN. FOR EXACT SIZE, NUMBER AND LOCATION OF THE OPENINGS, SEE ARCHITECTURAL, MECANICAL, PLUMBING, AND ELECTRICAL DRAWINGS. FOR FRAMING AT OPENINGS, SEE TYPICAL DETAILS.
K. VERIFY EXACT SIZE AND WEIGHT OF EQUIPMENT ON ROOF WITH MECHANICAL DRAWINGS.
L. ALL "K" TYPE JOISTS SHALL HAVE A SHOE DEPTH OF 2 1/2" GIRDER JOISTS TO HAVE A 7 1/2" SHOE DEPTH. THE JOIST MANUFACTURER SHALL DESIGN ALL JOISTS AND THE SHOES FOR AN AXIAL TENSION (T) OR COMPRESSION (C) LOAD OF 4,300# (UNFACTORED, SEISMIC) DUE TO OUT-OF-PLANE LOADS, UNLESS LARGER LOAD IS INDICATED ON PLANS.
M. DESIGN ROOF JOISTS FOR DRIFTING SNOW LOAD AND WIND UPLIFT LOADS SHOWN ON S1B-6.0
N. RME: INDICATES HVAC EQUIPMENT ON ROOF. SEE TYPICAL DETAILS FOR FRAMING INFORMATION.
O. CONTRACTOR TO VERIFY AND BE RESPONSIBLE FOR VARIATIONS IN CONCRETE QUANTITY DUE TO CAMBER, CONSTRUCTION DEAD LOAD DEFLECTIONS AND/OR STRUCTURAL STEEL TOLERANCES OF STEEL BEAMS, STEEL DECK AND PRECAST CONCRETE STRUCTURE.
P. BRACE TOPS OF NON-BEARING MASONRY WALLS TO BOTTOM OF FLOOR OR ROOF PER TYPICAL DETAILS.
Q. SOME WALL PANELS WILL REQUIRE SLEEVES FOR ROUTING OF OTHER TRADES WITHIN THE WALL CAVITY. THE RESPONSIBLE SUBCONTRACTOR (I.E. ELECTRICAL SUB) SHALL BE RESPONSIBLE FOR THE LOCATION AND PLACEMENT OF THESE SLEEVES. THIS INVOLVES COORDINATING WITH THE PRECASTER TO GO TO THEIR SHOP AND LOCATE THE SLEEVES PRIOR TO CONCRETE BEING POURED.

STEEL COLUMN (SC) SCHEDULE

MARK	SIZE	BASE CONNECTION
SC1	HSS4x4x1/4	SEE DETAILS
SC2	HSS6x6x5/16	SEE DETAILS
SC3	HSS3x3x3/16	SEE DETAILS

KEYNOTES

(X)	
17	STRIP FOOTING CENTERED ON GRIDLINE (FACE OF PRECAST WALL), NOT WALL, SEE DETAIL
25	MECHANICAL CHASE. VERIFY SIZE W/ ARCH/MECHANICAL. REINFORCE OPENING IN SIMILAR MANNER AS SHOWN IN TYPICAL OPENING IN ROOF FRAMING' DETAIL. BLOCK-OUT OPENING PRIOR TO CONCRETE POUR. THEN AFTER CONCRETE HAS CURED, THE BLOCK-OUT CAN BE REMOVED AND THE STEEL DECK CUT OUT.
31	STAIR STRINGERS, PANS, AND TREADS TO BE OF SAME CONSTRUCTION AS SHOWN IN TYPICAL STEEL STAIR DETAIL.
33	PROVIDE CONT L4x4x1/4 DECK LEDGER BOLTED TO WALL W/ 5/8" x 5" SCREW ANCHORS AT 16" O.C.

WALL (W) SCHEDULE

TYPE	MATERIAL	THICKNESS	VERTICAL REINFORCING	HORIZONTAL REINFORCING	REMARKS
W1	MASONRY	8"	#5 AT 8" O.C.	(2) #4 AT 48" O.C.	SOLID GROUTED
W2	CONCRETE	8"	#4 AT 18" O.C.	#4 AT 12" O.C.	SEE DETAILS FOR HOOKED DOWEL INTO FOOTING
W3	PRECAST CONCRETE	8"	DEFERRED	DEFERRED	SOLID CONCRETE
W4	PRECAST CONCRETE	12"	DEFERRED	DEFERRED	SOLID CONCRETE
W5	PRECAST CONCRETE	14"	DEFERRED	DEFERRED	8" CORE, 3" INSULATION, 3" FINISH
W6	PRECAST CONCRETE	18"	DEFERRED	DEFERRED	12" CORE, 3" INSULATION, 3" FINISH

FOOTING SCHEDULE

MARK	LENGTH	WIDTH	THICKNESS	REINFORCING	REMARKS
F36	36"	36"	14"	(4) #4 EACH WAY BOTTOM	---
F42	42"	42"	14"	(5) #4 EACH WAY BOTTOM	---
F54	54"	54"	14"	(7) #4 EACH WAY BOTTOM	---
F84	84"	84"	18"	(8) #5 EACH WAY BOTTOM	
F90	90"	90"	18"	(9) #5 EACH WAY BOTTOM	
WF12	CONT	12"	14"	(2) #4 CONT W/ #4 AT 18" O.C. TRANSVERSE, BOTTOM	ATTACHED TO EXISTING FOOTING
WF18	CONT	18"	12"	(2) #4 CONT BOTTOM	STRIP FOOTING
WF24	CONT	24"	12"	(3) #4 CONT BOTTOM	STRIP FOOTING
WF30	CONT	30"	14"	(2) #4 CONT W/ #5 AT 16" O.C. TRANSVERSE, TOP AND BOTTOM	STRIP FOOTING SEE DETAILS FOR HOOKED DOWEL INTO WALL
WF36	CONT	36"	14"	(3) #4 CONT W/ #5 AT 16" O.C. TRANSVERSE, TOP AND BOTTOM	STRIP FOOTING
WF42	CONT	42"	14"	(4) #4 CONT W/ #5 AT 16" O.C. TRANSVERSE, TOP AND BOTTOM	STRIP FOOTING
WF48	CONT	48"	16"	(5) #4 CONT W/ #5 AT 16" O.C. TRANSVERSE, TOP AND BOTTOM	STRIP FOOTING
WF66	CONT	66"	16"	(6) #4 CONT W/ #5 AT 12" O.C. TRANSVERSE, TOP AND BOTTOM	STRIP FOOTING

FOUNDATION PLAN NOTES

A. VERIFY ALL DIMENSIONS WITH ALL ARCHITECTURAL DRAWINGS.
B. ALL SCHEDULED MARK DESIGNATIONS MAY NOT NECESSARILY BE FOUND ON THIS PLAN. SCHEDULES ARE TYPICAL TO THIS PROJECT.
C. THE DEPTH OF FOOTING DIMENSION INDICATED IN THE G.S.N. IS A MINIMUM. FOUNDATION CONTRACTOR SHALL COORDINATE WITH THE SOILS REPORT AND OTHER TRADES TO INSURE THAT THESE MINIMUMS ARE SUFFICIENT FOR THE WORK. SEE TYPICAL DETAILS FOR ADDITIONAL REQUIREMENTS.
D. W1, W2, ETC. - AS SHOWN ON PLAN INDICATES CONCRETE OR MASONRY WALLS. SEE WALL SCHEDULE FOR ADDITIONAL INFORMATION.
E. WF18, WF24, ETC. - AS SHOWN ON PLAN INDICATES A CONTINUOUS WALL FOOTING. SEE FOOTING SCHEDULE FOR ADDITIONAL INFORMATION.
F. F36, F48, ETC. - AS SHOWN ON PLAN INDICATES A CONCRETE FOOTING. SEE FOOTING SCHEDULE FOR ADDITIONAL INFORMATION.
G. SC1, SC2, ETC. - AS SHOWN ON PLAN INDICATES A STEEL COLUMN. SEE STEEL COLUMN SCHEDULE FOR ADDITIONAL INFORMATION. COLUMNS START AT THE LEVEL THEY ARE CALLED OUT ON.
H. MJ1, MJ2, ETC. - AS SHOWN ON PLAN INDICATES A MASONRY JAMB. SEE JAMB SCHEDULE FOR ADDITIONAL INFORMATION. ALL OPENINGS SHALL HAVE 'MJ1' TYPE JAMBS EACH SIDE OF OPENING U.N.O. ON DRAWINGS.
I. FOR SIDEWALK AND LANDING LOCATIONS, SEE ARCHITECTURAL DRAWINGS.
J. TYPICAL TOP OF CAST-IN-PLACE CONCRETE FOUNDATION WALL = 100'-0"
K. TYPICAL TOP OF EXTERIOR FOOTING AND ALL INTERIOR FOOTINGS SUPPORTING PRECAST WALLS = 98'-0"
L. TYPICAL TOP OF INTERIOR FOOTING = 99'-2"
M. THE SIZE OF FOOTINGS SUPPORTING PRECAST STRUCTURE ARE PRELIMINARY AND ARE TO BE VERIFIED BY STRUCTURAL ENGINEER OF RECORD DURING THE PRECAST SUBMITTAL REVIEW PROCESS AND PRIOR TO FOOTING CONSTRUCTION
N. COORDINATE W/ ARCHITECTURAL AND PLUMBING DRAWINGS FOR LOCATIONS OF FLOOR DRAINS.

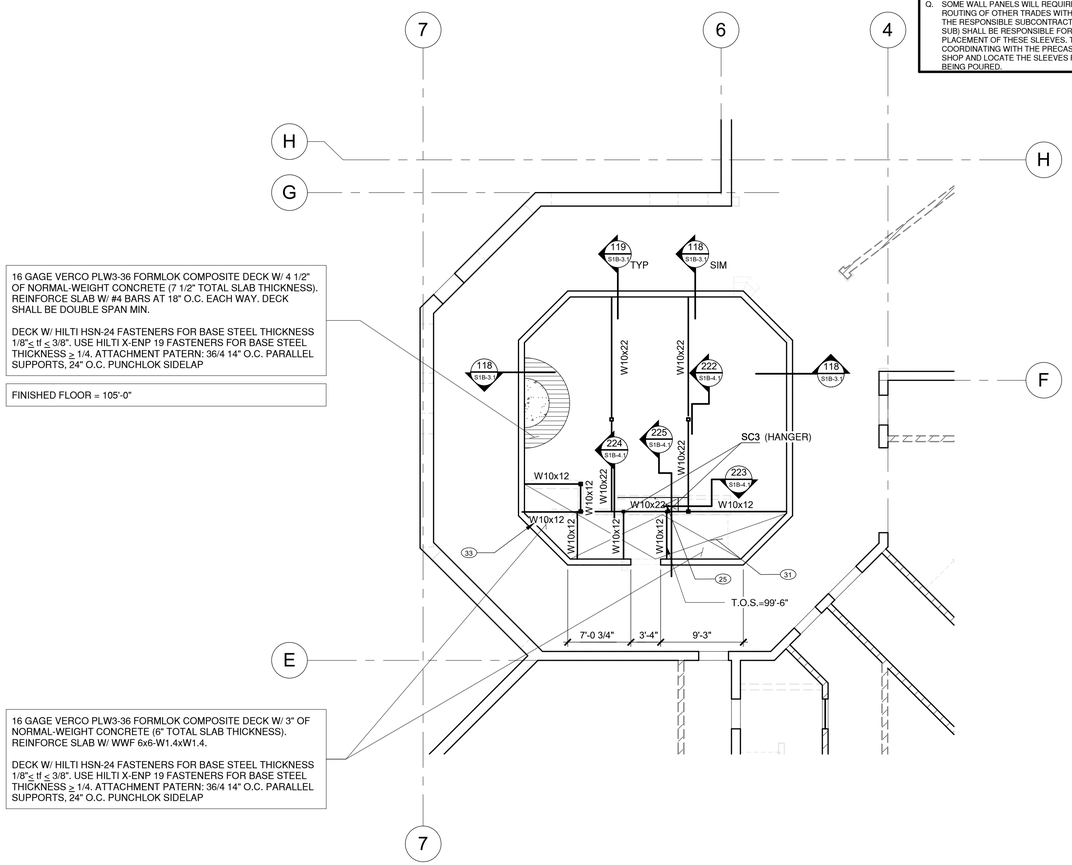

CONTROL ROOM FLOOR FRAMING PLAN

SCALE: 1/8" = 1'-0"

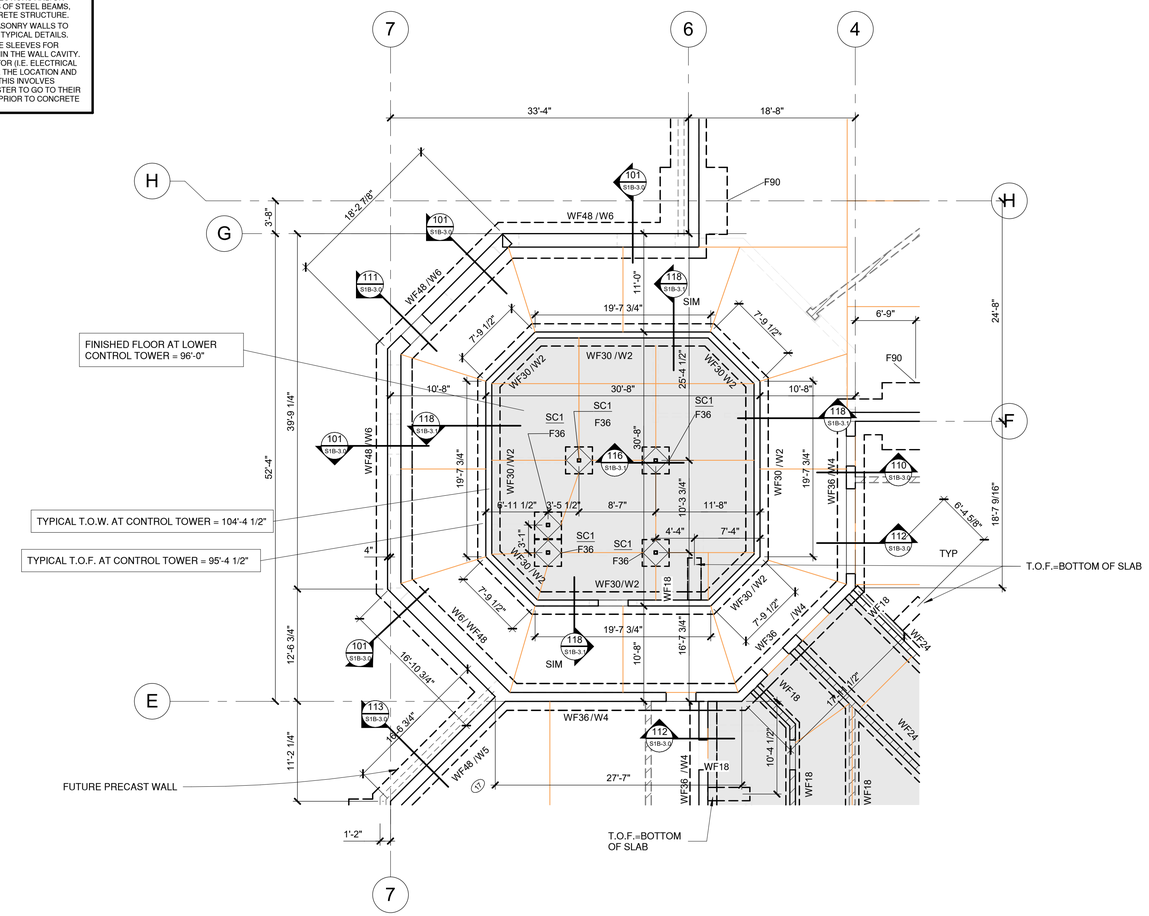

CONTROL ROOM FOUNDATION PLAN

SCALE: 1/8" = 1'-0"

This drawing is the property of Ridge Structural Engineering, Inc. Legally, the drawing can NOT be copied in whole or in pieces. It is only to be used for the project and site specifically identified hereon and is not to be used on any other project. Contractor shall carefully review all dimensions, details, and conditions and report at once any error, inconsistency or omission discovered before construction. The contractor assumes full liability for deviations from the intent of these plans.

JOB NO.: 24.145 | PROJECT MANAGER: KBB | CAD OPERATOR: GTC

Ridge Structural Engineering
1152 Bond Avenue, Suite B
Rexburg, ID 83440
phone: 208.227.8404
contact@ridgestructural.com

PROFESSIONAL ENGINEER LICENSED 14134 STATE OF IDAHO DAVID B. PORTER 03/26/2025

DATE

PHASE 1 PART B FOR:
TWIN FALLS COUNTY - WRIGHT AVE JAIL
2515 Wright Ave, Twin Falls, ID 83301
CONTROL ROOM FLOOR FRAMING AND FOUNDATION PLANS

Laughlin Ricks Architecture
architecture/planning
134 3RD Ave East, * Twin Falls, Idaho 83301
(208) 736-8050

DATE: 03/17/2025
GTC Drawn | KBB Checked
24-145 PROJECT #

S1B-2.3

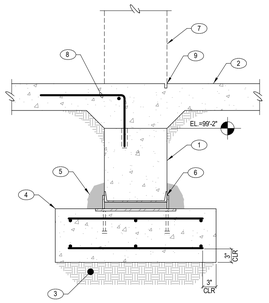

KEYNOTES:
1. PRECAST CONCRETE WALL PANEL, SEE PLAN
2. CONCRETE SLAB ON GRADE, SEE PLAN
3. COMPACTED SUB-GRADE BELOW FOOTING, SEE PLAN
4. CONCRETE FOOTING, SEE PLAN
5. GROUT OVER ALL EXPOSED STEEL BELOW GRADE, 3" MIN COVER
6. CONNECTION BY PRECASTER
7. WALL BEYOND, SEE PLAN
8. #4 EPOXY DOWEL AT 12" O.C. W/ 4" EMBEDMENT
   18"
9. SAW-CUT CONTROL JOINT

112 CONCRETE PRECAST WALL AT FOUNDATION
SCALE: NTS

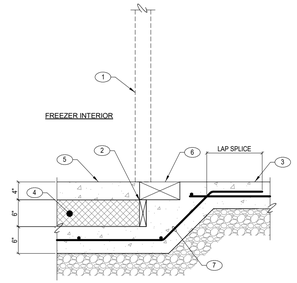

KEYNOTES:
1. PREFAB FREEZER WALL BEYOND
2. CONT 2x REDWOOD NAILER
3. CONCRETE SLAB ON VAPOR BARRIER, SEE PLAN
4. RIGID INSULATION WRAPPED IN VAPOR BARRIER, SEE ARCH
5. REINFORCED CONCRETE WEARING SLAB, SEE PLAN
6. 6"x4" VOID FOR DOOR HEATER, COORDINATE W/ FREEZER VENDOR
7. #4 BENT BAR AT 18" O.C.

NOTES:
A. COORDINATE SLAB DIMENSIONS W/ ARCH AND FREEZER MANUFACTURER

108 FREEZER SLAB AT DOOR
SCALE: NTS

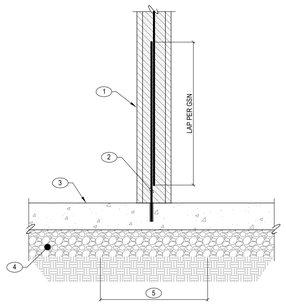

KEYNOTES:
1. MASONRY WALL, SEE PLAN
2. #5 DOWEL DRILLED AND EPOXIED INTO SLAB W/ 4" MIN EMBEDMENT
3. CONCRETE SLAB ON GRADE, SEE PLAN
4. CRUSHED GRAVEL, SEE GSN
5. COMPACT 24" MINIMUM WIDE SECTION OF SUBGRADE BELOW WALL TO 95% DRY DENSITY (MODIFIED PROCTOR)

104 MASONRY WALL AT CONCRETE SLAB ON GRADE
SCALE: NTS

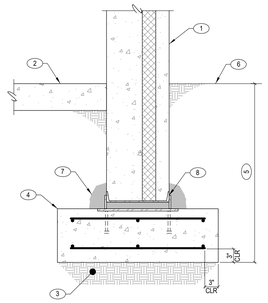

KEYNOTES:
1. INSULATED PRECAST CONCRETE WALL PANEL, SEE PLAN
2. CONCRETE SLAB ON GRADE, SEE PLAN
3. COMPACTED SUB-GRADE BELOW FOOTING, SEE PLAN
4. CONCRETE FOOTING, SEE PLAN
5. MINIMUM FOOTING DEPTH, SEE GSN
6. FINISH GRADE PER ARCH
7. GROUT OVER ALL EXPOSED STEEL BELOW GRADE, 3" MIN COVER
8. CONNECTION BY PRECASTER

101 CONCRETE PRECAST WALL AT FOUNDATION
SCALE: NTS

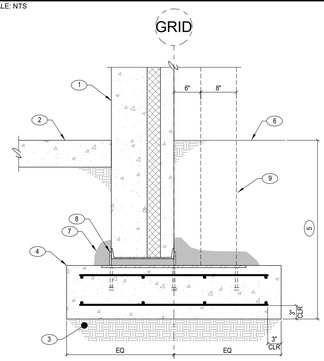

KEYNOTES:
1. INSULATED PRECAST CONCRETE WALL PANEL, SEE PLAN
2. CONCRETE SLAB ON GRADE, SEE PLAN
3. COMPACTED SUB-GRADE BELOW FOOTING, SEE PLAN
4. CONCRETE FOOTING, SEE PLAN
5. MINIMUM FOOTING DEPTH, SEE GSN
6. FINISH GRADE PER ARCH
7. GROUT OVER ALL EXPOSED STEEL BELOW GRADE, 3" MIN COVER
8. CONNECTION BY PRECASTER OVERSIZE EMBED TO RECEIVE FUTURE WALL PANEL
9. FUTURE PRECAST WALL

112 CONCRETE PRECAST WALL AT FOUNDATION
SCALE: NTS

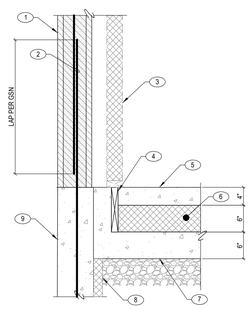

KEYNOTES:
1. MASONRY WALL, SEE PLAN
2. DOWEL TO MATCH VERTICAL MASONRY WALL REINFORCING SIZE AND SPACING
3. PREFAB FREEZER WALL BY OTHERS
4. CONT 2x REDWOOD NAILER
5. REINFORCED CONCRETE WEARING SLAB, SEE PLAN
6. RIGID INSULATION WRAPPED IN VAPOR BARRIER
7. CONCRETE SLAB ON VAPOR BARRIER, SEE PLAN
8. RIGID INSULATION AS OCCURS PER ARCH
9. CONCRETE WALL, SEE PLAN

NOTES:
A. COORDINATE SLAB DIMENSIONS W/ ARCH AND FREEZER MANUFACTURER

109 FREEZER SLAB AT EXTERIOR WALL
SCALE: NTS

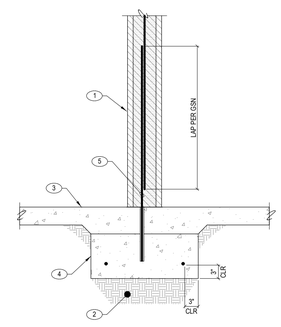

KEYNOTES:
1. MASONRY WALL, SEE PLAN
2. COMPACTED SUB-GRADE BELOW FOOTING, SEE PLAN
3. CONCRETE SLAB ON GRADE, SEE PLAN
4. CONCRETE FOOTING, SEE PLAN
5. MINIMUM FOOTING DEPTH, SEE GSN
6. CONCRETE SLAB ON GRADE OR CIVIL FLATWORK
7. GROUT OVER ALL EXPOSED STEEL BELOW GRADE, 3" MIN COVER
8. CONNECTION BY PRECASTER
9. WALL BEYOND, SEE PLAN
10. #4 EPOXY DOWEL AT 12" O.C. W/ 4" EMBEDMENT
    18"

105 MASONRY WALL AT FOUNDATION
SCALE: NTS

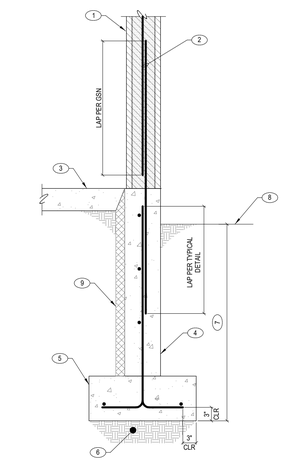

KEYNOTES:
1. MASONRY WALL, SEE PLAN
2. DOWEL TO MATCH VERTICAL MASONRY WALL REINFORCING SIZE AND SPACING
3. CONCRETE SLAB ON GRADE, SEE PLAN
4. CONCRETE WALL, SEE PLAN
5. CONCRETE FOOTING, SEE PLAN
6. COMPACTED SUB-GRADE BELOW FOOTING, SEE PLAN
7. MINIMUM FOOTING DEPTH, SEE GSN
8. SIDEWALK, PAVEMENT, OR FINISH GRADE PER ARCH
9. RIGID INSULATION AS OCCURS PER ARCH

102 MASONRY WALL AT FOUNDATION
SCALE: NTS

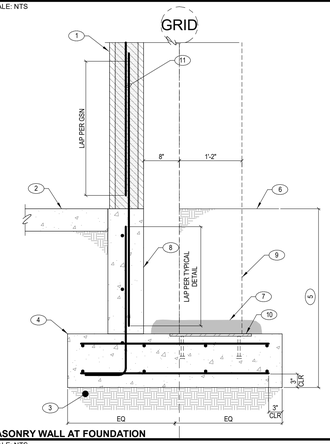

KEYNOTES:
1. MASONRY WALL, SEE PLAN
2. CONCRETE SLAB ON GRADE, SEE PLAN
3. COMPACTED SUB-GRADE BELOW FOOTING, SEE PLAN
4. CONCRETE FOOTING, SEE PLAN
5. MINIMUM FOOTING DEPTH, SEE GSN
6. FINISH GRADE PER ARCH
7. GROUT OVER ALL EXPOSED STEEL BELOW GRADE, 3" MIN COVER
8. CONCRETE WALL, SEE PLAN
9. FUTURE PRECAST WALL
10. PRECASTER TO PROVIDE EMBED FOR FUTURE WALL ATTACHMENT
11. DOWEL TO MATCH VERTICAL MASONRY WALL REINFORCING SIZE AND SPACING

113 CONCRETE PRECAST WALL AT FOUNDATION
SCALE: NTS

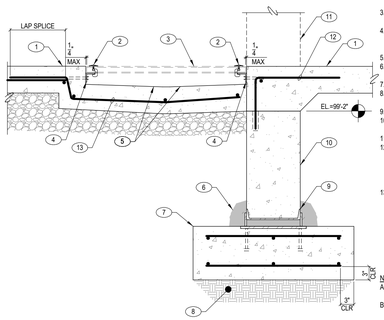

KEYNOTES:
1. CONCRETE SLAB ON GRADE, SEE PLAN
2. STAINLESS STEEL HOLD-DOWN CLIP, SEE ARCH
3. FIBERGLASS REINFORCED GRATE, SEE ARCH
4. L2x2x1/4" STAINLESS STEEL ANGLE W/ 3/8" x 4" STAINLESS STEEL SCREW ANCHORS AT 12" O.C.
5. SLOPE FLOOR DRAIN, SEE MECHANICAL
6. GROUT OVER ALL EXPOSED STEEL BELOW GRADE, 3" MIN COVER
7. CONCRETE FOOTING, SEE PLAN
8. COMPACTED SUB-GRADE BELOW FOOTING, SEE PLAN
9. CONNECTION BY PRECASTER
10. PRECAST CONCRETE WALL PANEL, SEE PLAN
11. WALL BEYOND, SEE PLAN
12. #4 EPOXY DOWEL AT 12" O.C. W/ 4" EMBEDMENT
    18"
13. #4 BENT BAR AT 18" O.C.

NOTES:
A. AT 'SIM' MASONRY WALL BEARS ON SLAB, SEE DETAIL 104
B. USE EPOXY COATED REBAR IN AND ADJACENT TO TROUGH DRAIN

106 FLOOR GRATE DETAIL
SCALE: NTS

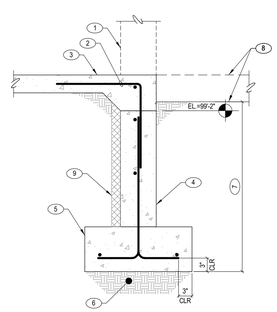

KEYNOTES:
1. WALL BEYOND, SEE PLAN
2. #4 BENT DOWEL AT 18" O.C.
   18"
   18"
3. CONCRETE SLAB ON GRADE, SEE PLAN
4. CONCRETE WALL, SEE PLAN
5. CONCRETE FOOTING, SEE PLAN
6. COMPACTED SUB-GRADE BELOW FOOTING, SEE PLAN
7. MINIMUM FOOTING DEPTH, SEE GSN
8. SIDEWALK, PAVEMENT, OR FINISH GRADE PER ARCH
9. RIGID INSULATION AS OCCURS PER ARCH

103 CONCRETE SLAB AT FOUNDATION
SCALE: NTS

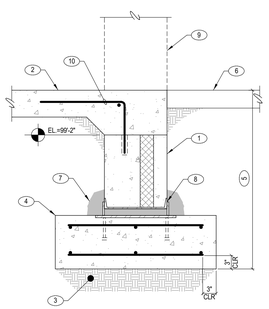

KEYNOTES:
1. INSULATED PRECAST CONCRETE WALL PANEL, SEE PLAN
2. CONCRETE SLAB ON GRADE, SEE PLAN
3. COMPACTED SUB-GRADE BELOW FOOTING, SEE PLAN
4. CONCRETE FOOTING, SEE PLAN
5. MINIMUM FOOTING DEPTH, SEE GSN
6. SLAB ON GRADE OR CIVIL FLATWORK
7. GROUT OVER ALL EXPOSED STEEL BELOW GRADE, 3" MIN COVER
8. CONNECTION BY PRECASTER
9. WALL BEYOND, SEE PLAN
10. #4 EPOXY DOWEL AT 12" O.C. W/ 4" EMBEDMENT
    18"

110 CONCRETE PRECAST WALL AT FOUNDATION
SCALE: NTS

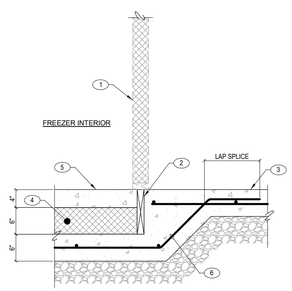

KEYNOTES:
1. PREFAB FREEZER WALL BY OTHERS
2. CONT 2x REDWOOD NAILER
3. CONCRETE SLAB ON VAPOR BARRIER, SEE PLAN
4. RIGID INSULATION WRAPPED IN VAPOR BARRIER, SEE ARCH
5. REINFORCED CONCRETE WEARING SLAB, SEE PLAN
6. #4 BENT BAR AT 18" O.C.

NOTES:
A. COORDINATE SLAB DIMENSIONS W/ ARCH AND FREEZER MANUFACTURER

111 CONCRETE PRECAST WALL AT FOUNDATION
SCALE: NTS

107 FREEZER SLAB AT INTERIOR
SCALE: NTS

This drawing is the property of Ridge Structural Engineering, Inc. Legally, the drawing can NOT be copied in whole or in pieces. It is only to be used for the project and site specifically identified hereon and is not to be used on any other project. Contractor shall carefully review all dimensions, details, and conditions and report at once any error, inconsistency or omission discovered before construction. The contractor assumes full liability for deviations from the intent of these plans.

JOB NO.: 24.145 | PROJECT MANAGER: KBB | CAD OPERATOR: GTC

Ridge Structural Engineering
1152 Bond Avenue, Suite B
Rexburg, ID 83440
phone: 208.227.8404
contact@ridgestructural.com

PROFESSIONAL ENGINEER LICENSED 14134 STATE OF IDAHO DAVID B. PORTER 03/17/2025

DATE

PHASE 1 PART B FOR:
TWIN FALLS COUNTY - WRIGHT AVE JAIL
2515 Wright Ave, Twin Falls, ID 83301
FOUNDATION DETAILS

Laughlin Ricks Architecture
architecture/planning
134 3RD Ave East * Twin Falls, Idaho 83301
(208) 736-8050

DATE: 03/17/2025
GTC Drawn | KBB Checked
24-145 PROJECT #

S1B-3.0

KEYNOTES:
1. CONCRETE OVER STEEL DECK, SEE PLAN
2. CONCRETE WALL, SEE PLAN
3. #5 BENT DOWEL AT 18" O.C.
   48" / 12"
4. CONCRETE FOOTING, SEE PLAN
5. COMPACTED SUB-GRADE BELOW FOOTING, SEE PLAN
6. CONCRETE SLAB ON GRADE, SEE PLAN
7. #4 BENT DOWEL AT 18" O.C.
   18" / 18"
8. WINDOW SYSTEM BY OTHERS

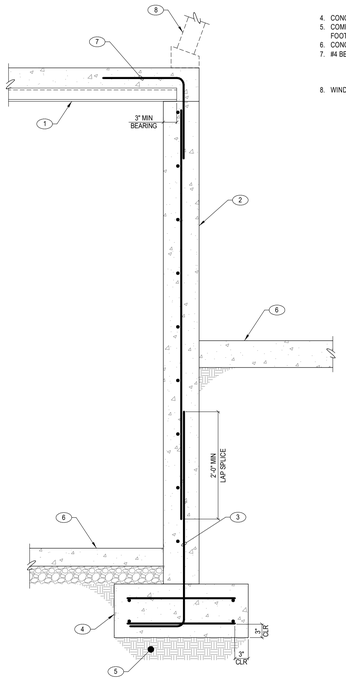

NOTES:
A. AT 'SIM' STEEL DECK RUNS PARALLEL TO WALL

118 STEEL DECK AT FOUNDATION
SCALE: NTS

KEYNOTES:
1. STEEL COLUMN
2. FOR 6" COLUMNS: 3/4"x12"x12" PLATE W/ (4) 3/4" DIA ANCHOR BOLTS AND LEVELING NUTS W/ 9" MINIMUM EMBEDMENT
   FOR 4" COLUMNS: 1/2"x10"x10" PLATE W/ (4) 3/4" DIA ANCHOR BOLTS AND LEVELING NUTS W/ 9" MINIMUM EMBEDMENT
3. ± 1 1/2" NON-SHRINK
4. CONCRETE CLOSURE POUR. POUR AFTER DEAD LOADS ARE IN PLACE
5. CONCRETE SLAB ON GRADE
6. CONCRETE FOOTING
7. COMPACT SUB-GRADE BELOW FOOTING

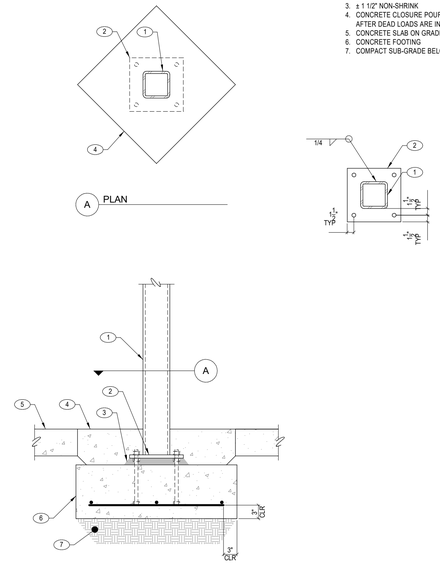

116 STEEL COLUMN AT FOUNDATION
SCALE: NTS

KEYNOTES:
1. MASONRY WALL, SEE PLAN
2. DOWEL TO MATCH VERTICAL MASONRY WALL REINFORCING SIZE AND SPACING
3. CONCRETE SLAB ON GRADE, SEE PLAN
4. CONCRETE WALL, SEE PLAN
5. CONCRETE FOOTING, SEE PLAN
6. COMPACTED SUB-GRADE BELOW FOOTING, SEE PLAN
7. EXISTING BUILDING AS OCCURS
8. EXISTING FOUNDATION SYSTEM
9. DRILL AND EPOXY BAR INTO EXISTING FOOTING
10. EXISTING CONCRETE SLAB ON GRADE
11. #3 BENT DOWEL AT 18" O.C. DRILLED AND EPOXIED INTO EXISTING WALL
    8" / 6"

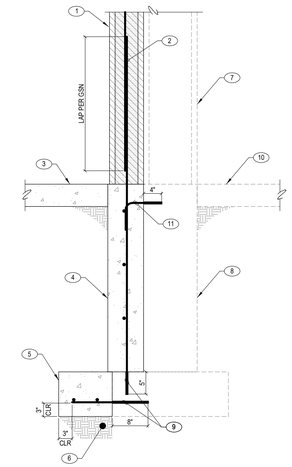

115 NEW FOUNDATION AT EXISTING FOUNDATION SYSTEM
SCALE: NTS

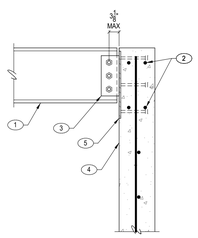

KEYNOTES:
1. STEEL BEAM, SEE PLAN
2. (4) ADDITIONAL #4 BARS AT EMBED PLATE, (1) EACH FACE OF WALL
3. STEEL BEAM SHEAR PLATE, SEE TYPICAL SHEAR PLATE CONNECTION DETAIL. PROVIDE HORIZONTAL LONG-SLOTTED HOLES IN BEAM OR SHEAR PLATE
4. CONCRETE WALL, SEE PLAN
5. 1/2" THICK STEEL EMBED PLATE W/ (6) 5/8" DIA x 6" LONG HEADED STUDS

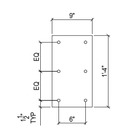

NOTES:
A. SEE CORRESPONDING DETAILS FOR ADDITIONAL INFORMATION

119 STEEL BEAM AT CONCRETE WALL
SCALE: NTS

KEYNOTES:
1. STEEL COLUMN
2. 3/4"x7"x12" PLATE W/ (4) 3/4" DIA ANCHOR BOLTS AND LEVELING NUTS W/ 9" MINIMUM EMBEDMENT
3. ± 1 1/2" NON-SHRINK
4. CONCRETE CLOSURE POUR. POUR AFTER DEAD LOADS ARE IN PLACE
5. CONCRETE SLAB ON GRADE
6. CONCRETE FOOTING
7. COMPACT SUB-GRADE BELOW FOOTING
8. MASONRY WALL, SEE PLAN

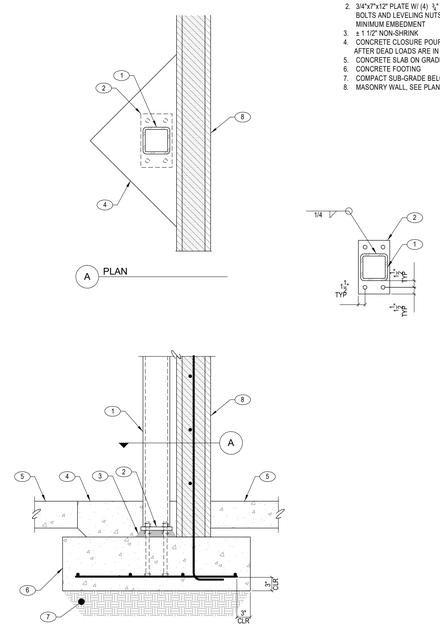

117 STEEL COLUMN AT FOUNDATION
SCALE: NTS

PROFESSIONAL ENGINEER LICENSED 14134 STATE OF IDAHO DAVID B. PORTER 03/17/2025

DATE

PHASE 1 PART B FOR:
TWIN FALLS COUNTY - WRIGHT AVE JAIL
2515 Wright Ave, Twin Falls, ID 83301
FOUNDATION DETAILS

Laughlin Ricks Architecture
architecture/planning
134 3RD Ave East * Twin Falls, Idaho 83301
(208) 736-8050

DATE: 03/17/2025
GTC Drawn | KBB Checked
24-145 PROJECT #

S1B-3.1

This drawing is the property of Ridge Structural Engineering, Inc. Legally, the drawing can NOT be copied in whole or in pieces. It is only to be used for the project and site specifically identified hereon and is not to be used on any other project. Contractor shall carefully review all dimensions, details, and conditions and report at once any error, inconsistency or omission discovered before construction. The contractor assumes full liability for deviations from the intent of these plans.

JOB NO.: 24.145 | PROJECT MANAGER: KBB | CAD OPERATOR: GTC

Ridge Structural Engineering
1152 Bond Avenue, Suite B
Rexburg, ID 83440
phone: 208.227.8404
contact@ridgestructural.com

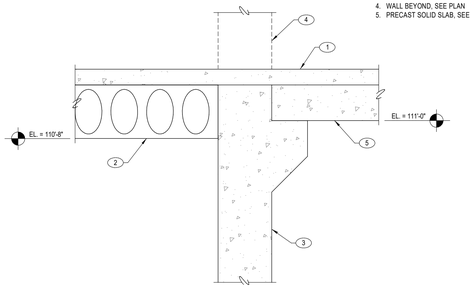

KEYNOTES:
1. CONCRETE TOPPING SLAB, SEE PLAN
2. HOLLOWCORE PLANK, SEE PLAN
3. PRECAST CONCRETE WALL PANEL, SEE PLAN
4. WALL BEYOND, SEE PLAN
5. PRECAST SOLID SLAB, SEE PLAN

211 FLOOR PANELS AT PRECAT WALL
SCALE: NTS

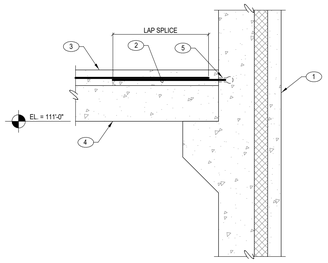

KEYNOTES:
1. INSULATED PRECAST CONCRETE WALL PANEL, SEE PLAN
2. #3 x 24" LONG REBAR DOWELS W/ THREADED END
3. CONCRETE TOPPING SLAB, SEE PLAN
4. PRECAST SOLID SLAB, SEE PLAN
5. LOOP FERRULE INSERT TO RECEIVE #3 BAR AT 16" O.C. BY PRECASTER. MUST BE CAPABLE OF SUPPORTING A TENSION LOAD OF 1,500# (UNFACTORED, SEISMIC)

207 PRECAST SOLID SLAB AT PRECAST WALL
SCALE: NTS

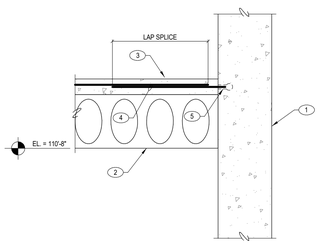

KEYNOTES:
1. PRECAST CONCRETE WALL PANEL, SEE PLAN
2. HOLLOWCORE PLANK, SEE PLAN
3. CONCRETE TOPPING SLAB, SEE PLAN
4. #3 x 24" LONG REBAR DOWELS W/ THREADED END
5. LOOP FERRULE INSERT TO RECEIVE #3 BAR AT 16" O.C. BY PRECASTER. MUST BE CAPABLE OF SUPPORTING A TENSION LOAD OF 1,500# (UNFACTORED, SEISMIC)

212 HOLLOWCORE PLANK AT PRECAST WALL
SCALE: NTS

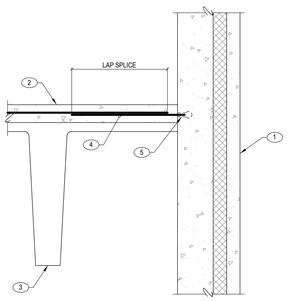

KEYNOTES:
1. INSULATED PRECAST CONCRETE WALL PANEL, SEE PLAN
2. CONCRETE TOPPING SLAB, SEE PLAN
3. PRECAST CONCRETE DOUBLE-T, SEE PLAN
4. #3 x 24" LONG REBAR DOWELS W/ THREADED END
5. LOOP FERRULE INSERT TO RECEIVE #3 BAR AT 16" O.C. BY PRECASTER. MUST BE CAPABLE OF SUPPORTING A TENSION LOAD OF 1,500# (UNFACTORED, SEISMIC)

208 PRECAST DOUBLE T AT PRECAST WALL
SCALE: NTS

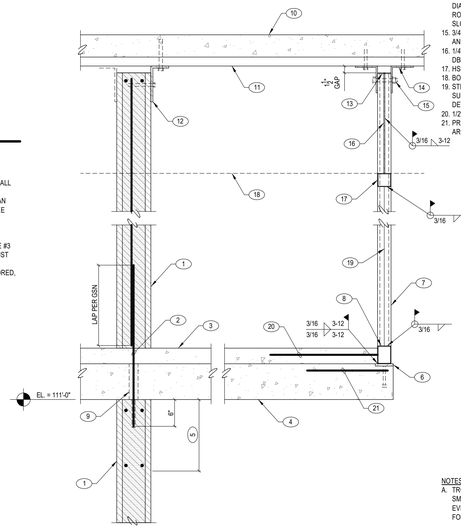

KEYNOTES:
1. MASONRY WALL, SEE PLAN
2. DOWEL TO MATCH SIZE AND SPACING OF WALL VERTICAL REINFORCEMENT, DRILL AND EPOXY INTO WALL BELOW
3. CONCRETE TOPPING SLAB, SEE PLAN
4. PRECAST SOLID SLAB, SEE PLAN
5. CONTINUOUS 16" DEEP (MIN) SOLID GROUTED BOND BEAM W/ (4) #4 BARS
6. CONT 1/2" x 4" EMBED PLATE W/ 1/2" DIA x 5" LONG HEADED STUDS AT 16" O.C.
7. HSS3x3x3/16 AT 6'-0" O.C. MAX SPACING, LOCATE COLUMNS TO MISS DBL T STEMS AND BE ABLE TO EXTEND ALL THE WAY TO THE BOTTOM OF ROOF SLAB
8. CONT HSS4x3x1/8 (LSV), SPLICE AT COLUMN LOCATIONS
9. 2" DIA CORRUGATED SLEEVE AT 32" O.C. W/ NON-SHRINK GROUT
10. CONCRETE TOPPING SLAB, SEE PLAN
11. PRECAST DOUBLE-T BEAM , SEE PLAN
12. SEE TYPICAL DETAIL FOR ATTACHMENT OF NON-BEARING WALL TO PRECAST STRUCTURE
13. 3/16" CAP PLATE
14. L5x5x5/16 EACH SIDE OF COLUMN W/ 1/2" DIA x 4" LONG SCREW ANCHOR INTO ROOF SLAB. PROVIDE 3" LONG VERTICAL SLOTTED HOLE IN FACE OF COLUMN
15. 3/4" A325N BOLT, FINGER TIGHTEN NUT AND SPOIL THREADS
16. 1/4" THICK STEEL PLATE CUT AROUND DBL Ts
17. HSS3x3x3/16 BETWEEN EACH COLUMN
18. BOTTOM OF DBL T AS OCCURS
19. STEEL MESH PER ARCH, ATTACH TO SURROUNDING STEEL PER TYPICAL DETAIL
20. 1/2" DIA x 24" LONG DBAs AT 16" O.C.
21. PRECASTER TO PROVIDE #3 HAIRPIN AROUND EACH HEADED STUD

NOTES:
A. TROWEL TOP OF MASONRY WALL SMOOTH AFTER GROUTING TO PROVIDE EVEN AND CLEAN BEARING SURFACE FOR PRECAST

204 PRECAST SOLID SLAB AT MASONRY WALL
SCALE: NTS

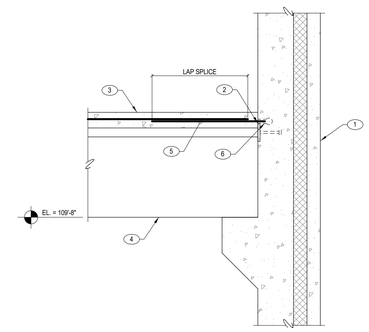

KEYNOTES:
1. INSULATED PRECAST CONCRETE WALL PANEL, SEE PLAN
2. CONNECTION BY PRECASTER
3. CONCRETE TOPPING SLAB, SEE PLAN
4. PRECAST CONCRETE DOUBLE-T, SEE PLAN
5. #3 x 24" LONG REBAR DOWELS W/ THREADED END
6. LOOP FERRULE INSERT TO RECEIVE #3 BAR AT 16" O.C. BY PRECASTER. MUST BE CAPABLE OF SUPPORTING A TENSION LOAD OF 1,500# (UNFACTORED, SEISMIC)

201 PRECAST DOUBLE T AT PRECAST WALL
SCALE: NTS

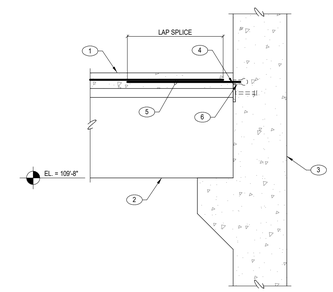

KEYNOTES:
1. CONCRETE TOPPING SLAB, SEE PLAN
2. PRECAST CONCRETE DOUBLE-T, SEE PLAN
3. PRECAST CONCRETE WALL PANEL, SEE PLAN
4. CONNECTION BY PRECASTER
5. #3 x 24" LONG REBAR DOWELS W/ THREADED END
6. LOOP FERRULE INSERT TO RECEIVE #3 BAR AT 16" O.C. BY PRECASTER. MUST BE CAPABLE OF SUPPORTING A TENSION LOAD OF 1,500# (UNFACTORED, SEISMIC)

202 PRECAST DOUBLE T AT PRECAST WALL
SCALE: NTS

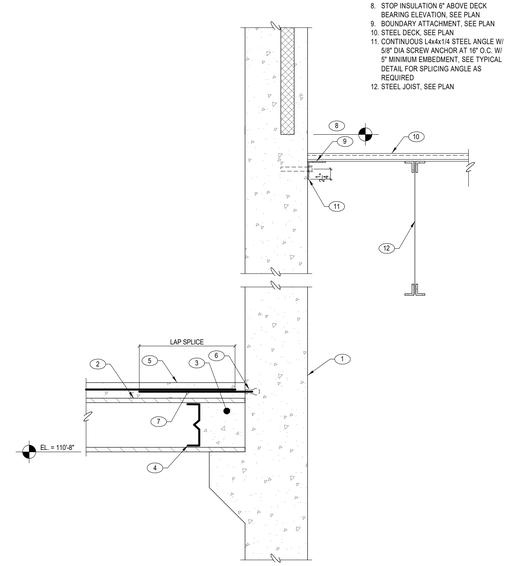

KEYNOTES:
1. INSULATED PRECAST CONCRETE WALL PANEL, SEE PLAN
2. HOLLOWCORE PLANK, SEE PLAN
3. GROUT PLANK SOLID AT BEARING
4. CORE DAM
5. CONCRETE TOPPING SLAB, SEE PLAN
6. LOOP FERRULE INSERT TO RECEIVE #3 BAR AT 16" O.C. BY PRECASTER. MUST BE CAPABLE OF SUPPORTING A TENSION LOAD OF 1,500# (UNFACTORED, SEISMIC)
7. #3 x 24" LONG REBAR DOWELS W/ THREADED END
8. STOP INSULATION 6" ABOVE DECK BEARING ELEVATION, SEE PLAN
9. BOUNDARY ATTACHMENT, SEE PLAN
10. STEEL DECK, SEE PLAN
11. CONTINUOUS L4x4x1/4 STEEL ANGLE W/ 5/8" DIA SCREW ANCHOR AT 16" O.C. W/ 5" MINIMUM EMBEDMENT, SEE TYPICAL DETAIL FOR SPLICING ANGLE AS REQUIRED
12. STEEL JOIST, SEE PLAN

213 HOLLOWCORE PLANK AT PRECAST WALL
SCALE: NTS

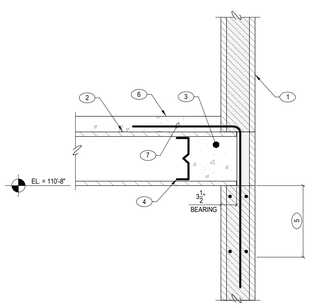

KEYNOTES:
1. MASONRY WALL, SEE PLAN
2. HOLLOWCORE PLANK, SEE PLAN
3. GROUT PLANK SOLID AT BEARING
4. CORE DAM
5. CONTINUOUS 16" DEEP (MIN) SOLID GROUTED BOND BEAM W/ (4) #4 BARS
6. CONCRETE TOPPING SLAB, SEE PLAN
7. #4 BENT DOWEL AT 16" O.C.

24"
36"

NOTES:
A. TROWEL TOP OF MASONRY WALL SMOOTH AFTER GROUTING TO PROVIDE EVEN AND CLEAN BEARING SURFACE FOR PRECAST

209 HOLLOWCORE PANEL AT MASONRY WALL
SCALE: NTS

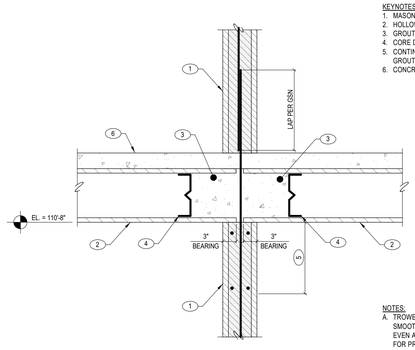

KEYNOTES:
1. MASONRY WALL, SEE PLAN
2. HOLLOWCORE PLANK, SEE PLAN
3. GROUT PLANK SOLID AT BEARING
4. CORE DAM
5. CONTINUOUS 16" DEEP (MIN) SOLID GROUTED BOND BEAM W/ (4) #4 BARS
6. CONCRETE TOPPING SLAB, SEE PLAN

NOTES:
A. TROWEL TOP OF MASONRY WALL SMOOTH AFTER GROUTING TO PROVIDE EVEN AND CLEAN BEARING SURFACE FOR PRECAST

205 HOLLOWCORE PLANK AT MASONRY WALL
SCALE: NTS

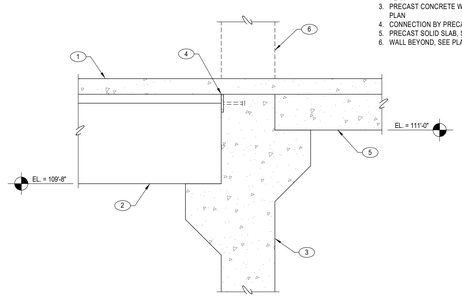

KEYNOTES:
1. CONCRETE TOPPING SLAB, SEE PLAN
2. PRECAST CONCRETE DOUBLE-T, SEE PLAN
3. PRECAST CONCRETE WALL PANEL, SEE PLAN
4. CONNECTION BY PRECASTER
5. PRECAST SOLID SLAB, SEE PLAN
6. WALL BEYOND, SEE PLAN

203 PRECAST DOUBLE T AT PRECAST WALL
SCALE: NTS

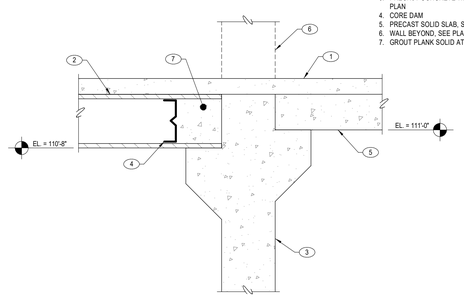

KEYNOTES:
1. CONCRETE TOPPING SLAB, SEE PLAN
2. HOLLOWCORE PLANK, SEE PLAN
3. PRECAST CONCRETE WALL PANEL, SEE PLAN
4. CORE DAM
5. PRECAST SOLID SLAB, SEE PLAN
6. WALL BEYOND, SEE PLAN
7. GROUT PLANK SOLID AT BEARING

210 PRECAST PANELS AT PRECAST WALL
SCALE: NTS

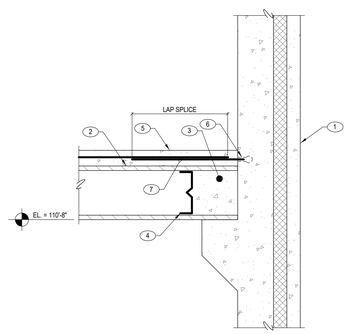

KEYNOTES:
1. INSULATED PRECAST CONCRETE WALL PANEL, SEE PLAN
2. HOLLOWCORE PLANK, SEE PLAN
3. GROUT PLANK SOLID AT BEARING
4. CORE DAM
5. CONCRETE TOPPING SLAB, SEE PLAN
6. LOOP FERRULE INSERT TO RECEIVE #3 BAR AT 16" O.C. BY PRECASTER. MUST BE CAPABLE OF SUPPORTING A TENSION LOAD OF 1,500# (UNFACTORED, SEISMIC)
7. #3 x 24" LONG REBAR DOWELS W/ THREADED END

206 HOLLOWCORE PLANK AT PRECAST WALL
SCALE: NTS

This drawing is the property of Ridge Structural Engineering, Inc. Legally, the drawing can NOT be copied in whole or in pieces. It is only to be used for the project and site specifically identified hereon and is not to be used on any other project. Contractor shall carefully review all dimensions, details, and conditions and report at once any error, inconsistency or omission discovered before construction. The contractor assumes full liability for deviations from the intent of these plans.

JOB NO.: 24.145	PROJECT MANAGER: KBB	CAD OPERATOR: GTC

Ridge Structural Engineering
1152 Bond Avenue, Suite B
Rexburg, ID 83440
phone: 208.227.8404
contact@ridgestructural.com

PROFESSIONAL ENGINEER LICENSED 14134 STATE OF IDAHO DAVID B. PORTER 03/17/2025

DATE

PHASE 1 PART B FOR:
TWIN FALLS COUNTY - WRIGHT AVE JAIL
2515 Wright Ave, Twin Falls, ID 83301
FLOOR FRAMING DETAILS

Laughlin Ricks Architecture
architecture/planning
134 3RD Ave East, * Twin Falls, Idaho 83301
(208) 736-8050

DATE: 03/17/2025

GTC	KBB
Drawn	Checked

24-145
PROJECT #

S1B-4.0

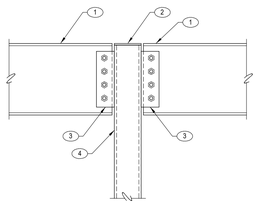

KEYNOTES:
1. STEEL BEAM, SEE PLAN
2. 1/4" THICK STEEL CAP PLATE
3. STEEL BEAM SHEAR PLATE, SEE TYPICAL SHEAR PLATE CONNECTION DETAIL
4. STEEL COLUMN, SEE PLAN

NOTES:
A. SEE CORRESPONDING DETAILS FOR ADDITIONAL INFORMATION

222 STEEL BEAM AT STEEL COLUMN
SCALE: NTS

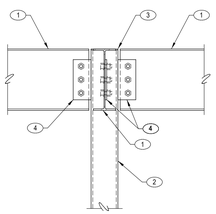

KEYNOTES:
1. STEEL BEAM, SEE PLAN
2. STEEL COLUMN, SEE PLAN
3. 1/4" THICK CAP PLATE
4. STEEL BEAM SHEAR PLATE, SEE TYPICAL SHEAR PLATE CONNECTION DETAIL

NOTES:
A. SEE CORRESPONDING DETAILS FOR ADDITIONAL INFORMATION

223 STEEL BEAM AT STEEL COLUMN
SCALE: NTS

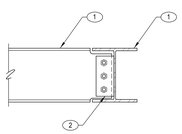

KEYNOTES:
1. STEEL BEAM, SEE PLAN
2. STEEL BEAM SHEAR PLATE, SEE TYPICAL SHEAR PLATE CONNECTION DETAIL

NOTES:
A. SEE CORRESPONDING DETAILS FOR ADDITIONAL INFORMATION

224 STEEL BEAM AT STEEL BEAM
SCALE: NTS

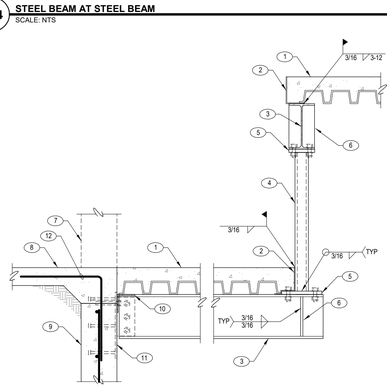

KEYNOTES:
1. CONCRETE OVER STEEL DECK, SEE PLAN
2. CONT 3/16" BENT PLATE
3. STEEL BEAM, SEE PLAN
4. STEEL COLUMN, SEE PLAN
5. 3/4" THICK STEEL CAP PLATE W/ (4) 3/4" DIA THRU BOLTS
6. 1/4" THICK STEEL WEB STIFFENER, EACH SIDE OF BEAM
7. CONCRETE WALL BEYOND
8. CONCRETE SLAB ON GRADE, SEE PLAN
9. CONCRETE WALL, PER PLAN
10. CONT L4x4x1/4 DECK LEDGER W/ 5/8 " DIA x 5" LONG SCREW ANCHOR
11. BEAM TO WALL CONNECTION PER DETAIL 119 ON S1B-3.1
12. #4 BENT DOWEL AT 18" O.C.

18"
18"

225 STEEL COLUMN AT STEEL BEAM
SCALE: NTS

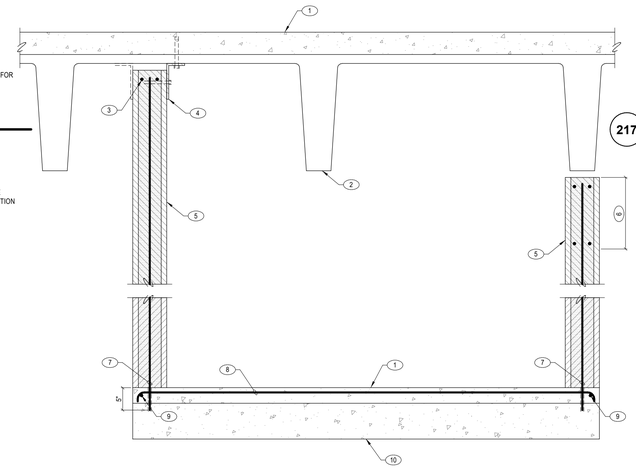

KEYNOTES:
1. CONCRETE TOPPING SLAB, SEE PLAN
2. PRECAST DOUBLE-T BEAM , SEE PLAN
3. CONT 8" BOND BEAM W/ (2) #4 AT TOP OF WALL
4. SEE TYPICAL DETAIL FOR ATTACHMENT OF WALL TO BOTTOM OF ROOF SLAB
5. MASONRY WALL, SEE PLAN
6. CONTINUOUS 16" DEEP (MIN) SOLID GROUTED BOND BEAM W/ (4) #5 BARS
7. DRILL AND EPOXY WALL VERTICAL REBAR INTO TOPPING SLAB
8. HOOK SLAB BAR DOWN AT EACH END AS SHOWN
9. CONT #4 BAR AT EDGE OF SLAB
10. PRECAST SOLID SLAB, SEE PLAN

220 MASONRY WALL AT PRECAST SOLID SLAB
SCALE: NTS

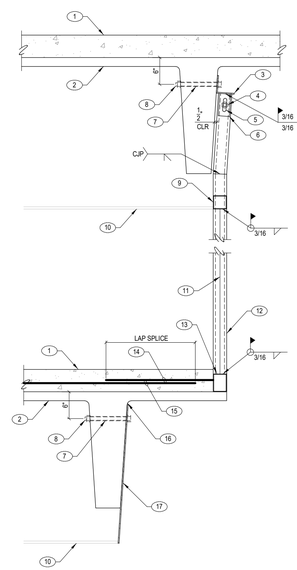

KEYNOTES:
1. CONCRETE TOPPING SLAB, SEE PLAN
2. PRECAST DOUBLE-T BEAM , SEE PLAN
3. CONT L4x4x1/4
4. 3/4" A325N BOLT, FINGER TIGHTEN NUT AND SPOIL THREADS
5. PROVIDE 3" LONG VERTICAL SLOTTED HOLE IN FACE OF COLUMN
6. 1/4" PLATE EACH SIDE OF COLUMN
7. PRECASTER TO PROVIDE 1" DIA SLEEVES AT 16" O.C.
8. 3/4" DIA THRU-BOLTS W/ OVERSIZED WASHERS, SPOIL THREADS
9. HSS3x3x3/16 BETWEEN EACH COLUMN
10. DROP CEILING PER ARCH
11. STEEL MESH PER ARCH, ATTACH TO SURROUNDING STEEL PER TYPICAL DETAIL
12. HSS3x3x3/16 AT 6'-0" O.C. MAX SPACING
13. CONT HSS4x3x1/8 (LSV), SPLICE AT COLUMN LOCATIONS
14. 1/2" DIA x 24" LONG DBAs AT 8" O.C.
15. #3 x 10'-0" LONG AT 8" O.C.
16. FIT PLATE AS TIGHT AS POSSIBLE INTO RADIUS
17. CONT 1/4" THICK PLATE

NOTES:
A. CLAMP EDGE OF SLAB TUBE TO FLANGE OF DBL T DURING TOPPING SLAB POUR
B. COLUMN MAY NOT NEED TO BE SLOPED DEPENDING ON EXACT LOCATION OF PRECAST DBL T. IF THE COLUMN CAN CLEAR THE T, RUN COLUMN TO DECK AND ATTACH PER DETAIL 204/S1B-4.0

221 STEEL COLUMN AT PRECAST DBL T
SCALE: NTS

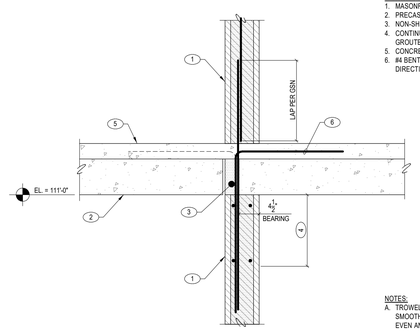

KEYNOTES:
1. MASONRY WALL, SEE PLAN
2. PRECAST SOLID SLAB, SEE PLAN
3. NON-SHRINK GROUT
4. CONTINUOUS 16" DEEP (MIN) SOLID GROUTED BOND BEAM W/ (4) #4 BARS
5. CONCRETE TOPPING SLAB, SEE PLAN
6. #4 BENT DOWEL AT 8" O.C. (ALTERNATE DIRECTIONS)

24"
36"

NOTES:
A. TROWEL TOP OF MASONRY WALL SMOOTH AFTER GROUTING TO PROVIDE EVEN AND CLEAN BEARING SURFACE FOR PRECAST

217 PRECAST SOLID SLAB AT MASONRY WALL
SCALE: NTS

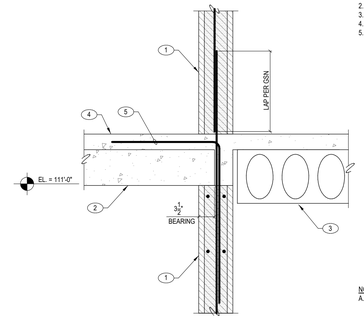

KEYNOTES:
1. MASONRY WALL, SEE PLAN
2. PRECAST SOLID SLAB, SEE PLAN
3. HOLLOWCORE PLANK, SEE PLAN
4. CONCRETE TOPPING SLAB, SEE PLAN
5. #4 BENT DOWEL AT 16" O.C.

24"
36"

NOTES:
A. TROWEL TOP OF MASONRY WALL SMOOTH AFTER GROUTING TO PROVIDE EVEN AND CLEAN BEARING SURFACE FOR PRECAST

218 PRECAST SOLID SLAB AT MASONRY WALL
SCALE: NTS

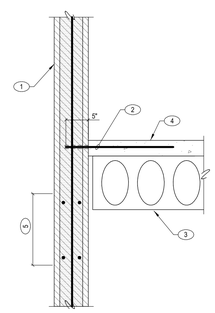

KEYNOTES:
1. MASONRY WALL, SEE PLAN
2. #3 x 24" LONG DOWEL AT 16" O.C. DRILLED AND EPOXIED INTO WALL
3. HOLLOWCORE PLANK, SEE PLAN
4. CONCRETE TOPPING SLAB, SEE PLAN
5. CONTINUOUS 16" DEEP (MIN) SOLID GROUTED BOND BEAM W/ (4) #4 BARS (LOCATED AT 8" SOLID SLAB BEARING ELEVATION)

219 HOLLOWCORE PLANK AT MASONRY WALL
SCALE: NTS

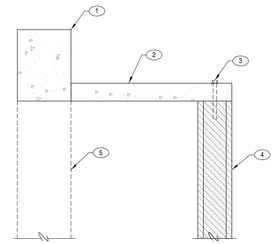

KEYNOTES:
1. PRECAST CONCRETE WALL PANEL, SEE PLAN
2. PRECAST CONCRETE PANEL, SEE PLAN
3. 5/8"x6" SCREW ANCHOR AT 32" O.C.
4. MASONRY WALL, SEE PLAN
5. WALL BEYOND, SEE PLAN

NOTES:
A. TROWEL TOP OF MASONRY WALL SMOOTH AFTER GROUTING TO PROVIDE EVEN AND CLEAN BEARING SURFACE FOR PRECAST

214 PRECAST SOLID SLAB AT MASONRY WALL
SCALE: NTS

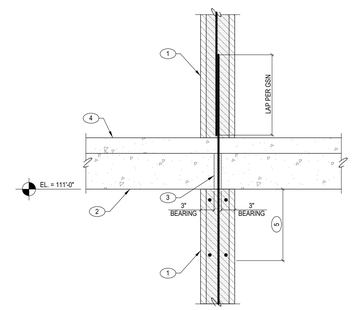

KEYNOTES:
1. MASONRY WALL, SEE PLAN
2. PRECAST SOLID SLAB, SEE PLAN
3. NON-SHRINK GROUT
4. CONCRETE TOPPING SLAB, SEE PLAN
5. CONTINUOUS 16" DEEP (MIN) SOLID GROUTED BOND BEAM W/ (4) #4 BARS

NOTES:
A. TROWEL TOP OF MASONRY WALL SMOOTH AFTER GROUTING TO PROVIDE EVEN AND CLEAN BEARING SURFACE FOR PRECAST

215 PRECAST SOLID SLAB AT MASONRY WALL
SCALE: NTS

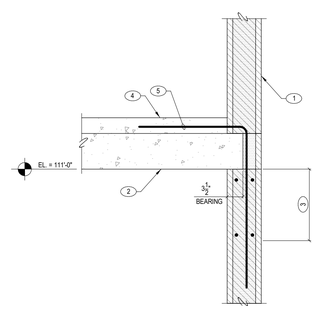

KEYNOTES:
1. MASONRY WALL, SEE PLAN
2. PRECAST SOLID SLAB, SEE PLAN
3. CONTINUOUS 16" DEEP (MIN) SOLID GROUTED BOND BEAM W/ (4) #4 BARS
4. CONCRETE TOPPING SLAB, SEE PLAN
5. #4 BENT DOWEL AT 16" O.C.

24"
36"

NOTES:
A. TROWEL TOP OF MASONRY WALL SMOOTH AFTER GROUTING TO PROVIDE EVEN AND CLEAN BEARING SURFACE FOR PRECAST

216 PRECAST SOLID SLAB AT MASONRY WALL
SCALE: NTS

PROFESSIONAL ENGINEER LICENSED 14134 STATE OF IDAHO DAVID B. PORTER
03/17/2025

DATE:

PHASE 1 PART B FOR:
TWIN FALLS COUNTY - WRIGHT AVE JAIL
2515 Wright Ave, Twin Falls, ID 83301
FLOOR FRAMING DETAILS

Laughlin Ricks Architecture
architecture/planning
134 3RD Ave East, * Twin Falls, Idaho 83301
(208) 736-8050

DATE: 03/17/2025
GTC Drawn
KBB Checked
24-145 PROJECT #

S1B-4.1

This drawing is the property of Ridge Structural Engineering, Inc. Legally, the drawing can NOT be copied in whole or in pieces. It is only to be used for the project and site specifically identified hereon and is not to be used on any other project. Contractor shall carefully review all dimensions, details, and conditions and report at once any error, inconsistency or omission discovered before construction. The contractor assumes full liability for deviations from the intent of these plans.

JOB NO.: 24.145 | PROJECT MANAGER: KBB | CAD OPERATOR: GTC

Ridge Structural Engineering
1152 Bond Avenue, Suite B
Rexburg, ID 83440
phone: 208.227.8404
contact@ridgestructural.com

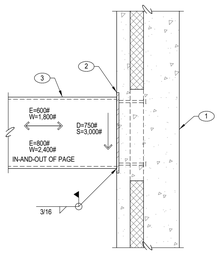

KEYNOTES:
1. INSULATED PRECAST CONCRETE WALL PANEL, SEE PLAN
2. GALVANIZED EMBED PLATE DESIGNED BY PRECASTER FOR UNFACTORED LOADS SHOWN. PLATE DIMENSIONS TO BE 6"x18"
3. STEEL BEAM, SEE PLAN

NOTES:
A. AFTER FIELD-WELD IS COMPLETE, PAINT ALL EXPOSED STEEL W/ GALVANIZING PAINT

311 STEEL BEAM AT PRECAST CONCRETE WALL
SCALE: NTS

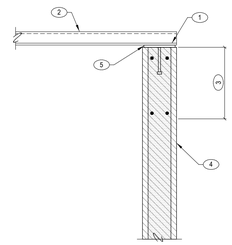

KEYNOTES:
1. BOUNDARY ATTACHMENT, SEE PLAN
2. STEEL DECK, SEE PLAN
3. CONT 18" DEEP (MIN) SOLID GROUTED BOND BEAM W/ (4) #4 BARS CONTINUOUS
4. MASONRY WALL, SEE PLAN
5. CONTINUOUS 1/2" x 7" WIDE EMBED PLATE W/ 5/8" DIA x 6" LONG HEADED STUDS AT 32" O.C.

308 STEEL DECK AT MASONRY WALL
SCALE: NTS

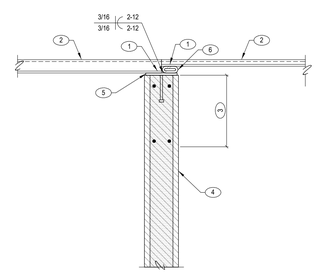

KEYNOTES:
1. BOUNDARY ATTACHMENT, SEE PLAN
2. STEEL DECK, SEE PLAN
3. CONT 18" DEEP (MIN) SOLID GROUTED BOND BEAM W/ (4) #4 BARS CONTINUOUS
4. MASONRY WALL, SEE PLAN
5. CONTINUOUS 1/2" x 7" WIDE EMBED PLATE W/ 5/8" DIA x 6" LONG HEADED STUDS AT 32" O.C.
6. CONT HSS3 1/2 x 1 1/2 x 3/16

304 STEEL DECK AT MASONRY WALL
SCALE: NTS

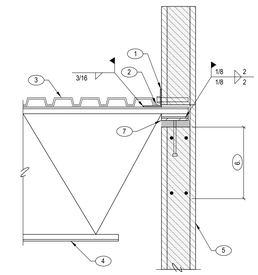

KEYNOTES:
1. CONTINUOUS L4x4x1/4 STEEL ANGLE W/ 5/8" DIA CONCRETE ANCHOR AT 32" O.C. W/ 5" MINIMUM EMBEDMENT
2. BOUNDARY ATTACHMENT, SEE PLAN
3. STEEL DECK, SEE PLAN
4. STEEL JOIST, SEE PLAN
5. MASONRY WALL, SEE PLAN
6. 16" DEEP BOND BEAM W/ (4) #4 BARS CONTINUOUS
7. 1/2" x 6" x 1'-0" BEARING PLATE W/ (2) 5/8" DIA x 8" LONG HEADED STUDS ON ±1 1/2" NON SHRINK GROUT

301 STEEL JOIST AT MASONRY WALL
SCALE: NTS

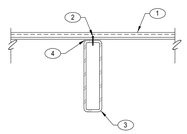

KEYNOTES:
1. ALUMINUM DECK, SEE PLAN
2. #8 SELF-TAPPING STAINLESS STEEL SCREW AT 12" O.C. (3 PER PANEL)
3. STEEL BEAM, SEE PLAN
4. CONT 3 1/2" WIDE STRIP OF BITUTHENE (OR APPROVED EQUAL) WATERPROOFING MEMBRANE BETWEEN BEAM AND PANEL

312 ALUMINUM DECK AT STEEL BEAM
SCALE: NTS

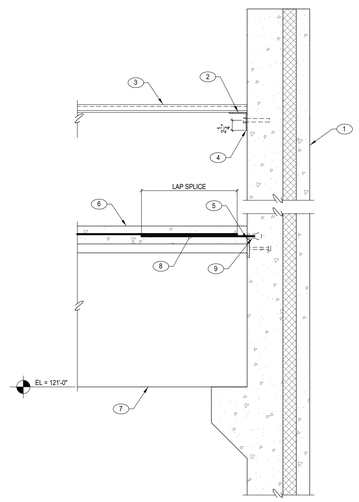

KEYNOTES:
1. INSULATED PRECAST CONCRETE WALL PANEL, SEE PLAN
2. BOUNDARY ATTACHMENT, SEE PLAN
3. STEEL DECK, SEE PLAN
4. CONTINUOUS L4x4x1/4 STEEL ANGLE W/ 5/8" DIA SCREW ANCHOR AT 32" O.C. W/ 5" MINIMUM EMBEDMENT
5. CONNECTION BY PRECASTER
6. CONCRETE TOPPING SLAB, SEE PLAN
7. PRECAST CONCRETE DOUBLE-T, SEE PLAN
8. #4x24" LONG REBAR DOWELS W/ THREADED END
9. LOOP FERRULE INSERT TO RECEIVE #4 BAR AT 18" O.C. BY PRECASTER. MUST BE CAPABLE OF SUPPORTING A TENSION LOAD OF 1,500# (UNFACTORED, SEISMIC)

309 PRECAST DOUBLE T AT PRECAST WALL
SCALE: NTS

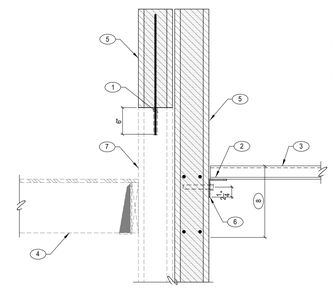

KEYNOTES:
1. DRILL AND EPOXY NEW WALL VERTICAL REBAR INTO EXISTING WALL
2. BOUNDARY ATTACHMENT, SEE PLAN
3. STEEL DECK, SEE PLAN
4. EXISTING ROOF FRAMING
5. MASONRY WALL, SEE PLAN
6. CONT L4x4x1/4 LEDGER ANGLE W/ 3/4" DIA x 6" TITEN HD MASONRY ANCHORS AT 16" O.C.
7. EXISTING MASONRY WALL
8. 16" DEEP BOND BEAM W/ (4) #4 BARS CONTINUOUS

305 STEEL DECK AT EXISTING MASONRY WALL
SCALE: NTS

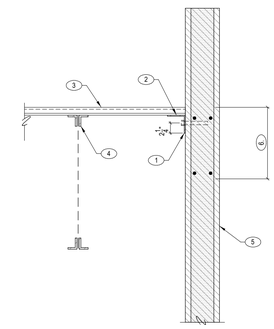

KEYNOTES:
1. CONTINUOUS L4x4x1/4 STEEL ANGLE W/ 5/8" DIA SCREW ANCHOR AT 32" O.C. W/ 5" MINIMUM EMBEDMENT
2. BOUNDARY ATTACHMENT, SEE PLAN
3. STEEL DECK, SEE PLAN
4. STEEL JOIST, SEE PLAN
5. MASONRY WALL, SEE PLAN
6. 16" DEEP BOND BEAM W/ (4) #4 BARS CONTINUOUS

302 STEEL JOIST AT MASONRY WALL
SCALE: NTS

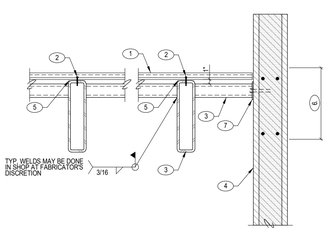

KEYNOTES:
1. ALUMINUM DECK, SEE PLAN
2. #8 SELF-TAPPING STAINLESS STEEL SCREW AT 12" O.C. (3 PER PANEL)
3. STEEL BEAM, SEE PLAN
4. MASONRY WALL, SEE PLAN
5. CONT 3 1/2" WIDE STRIP OF BITUTHENE (OR APPROVED EQUAL) WATERPROOFING MEMBRANE BETWEEN BEAM AND PANEL
6. 16" DEEP BOND BEAM W/ (4) #4 BARS CONTINUOUS
7. GALVANIZED 1/4"x4"x0'-7" PLATE W/ (2) 1/2" DIAx4" STAINLESS STEEL SCREW ANCHORS (1" EDGE DISTANCE)

NOTES:
A. AFTER FIELD-WELD IS COMPLETE, PAINT ALL EXPOSED STEEL W/ GALVANIZING PAINT

313 STEEL BEAM AT MASONRY WALL
SCALE: NTS

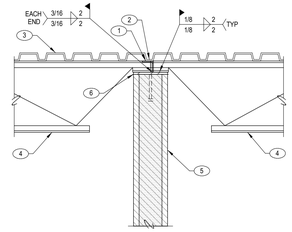

KEYNOTES:
1. CONTINUOUS L2 1/2x2 1/2x1/4 BETWEEN EACH JOIST
2. BOUNDARY ATTACHMENT, SEE PLAN
3. STEEL DECK, SEE PLAN
4. STEEL JOIST, SEE PLAN
5. MASONRY WALL, SEE PLAN
6. 1/2" x 8" x 1'-0" BEARING PLATE W/ (2) 5/8 " DIA x 6" LONG HEADED STUDS

306 STEEL JOIST AT MASONRY WALL
SCALE: NTS

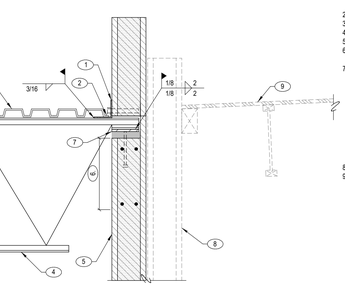

KEYNOTES:
1. CONTINUOUS L4x4x1/4 STEEL ANGLE W/ 5/8" DIA CONCRETE ANCHOR AT 32" O.C. W/ 5" MINIMUM EMBEDMENT
2. BOUNDARY ATTACHMENT, SEE PLAN
3. STEEL DECK, SEE PLAN
4. STEEL JOIST, SEE PLAN
5. MASONRY WALL, SEE PLAN
6. 16" DEEP BOND BEAM W/ (4) #4 BARS CONTINUOUS
7. CONT L4x4x1/4 LEDGER ANGLE W/ 3/4" DIA x 6" TITEN HD MASONRY ANCHORS AT 16" O.C.
8. 1/2" x 8" x 1'-0" BEARING PLATE W/ (2) 5/8" DIA x 8" LONG HEADED STUDS ON ±1 1/2" NON SHRINK GROUT
9. EXISTING ROOF FRAMING

303 STEEL JOIST AT MASONRY WALL
SCALE: NTS

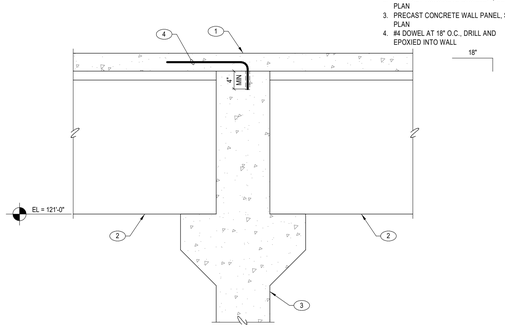

KEYNOTES:
1. CONCRETE TOPPING SLAB, SEE PLAN
2. PRECAST CONCRETE DOUBLE-T, SEE PLAN
3. PRECAST CONCRETE WALL PANEL, SEE PLAN
4. #4 DOWEL AT 18" O.C., DRILL AND EPOXIED INTO WALL

314 PRECAST DOUBLE T AT PRECAST WALL
SCALE: NTS

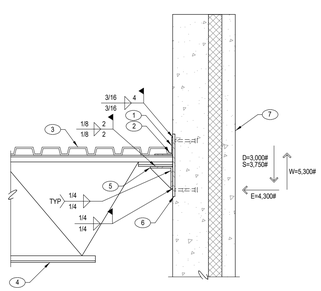

KEYNOTES:
1. CONTINUOUS L4x4x1/4 STEEL ANGLE, SEE TYPICAL DETAIL FOR SPLICING ANGLE AS REQUIRED
2. BOUNDARY ATTACHMENT, SEE PLAN
3. STEEL DECK, SEE PLAN
4. STEEL JOIST, SEE PLAN
5. L5x5x3/8 x 8" LONG CENTERED ON JOIST WELD 3/8" THICK STIFFENER PLATE TO ANGLE
6. 14" SQUARE EMBED PLATE DESIGNED BY PRECASTER FOR UNFACTORED LOADING SHOWN (CONSIDERING JOIST BEARING ECCENTRICITY)
7. INSULATED PRECAST CONCRETE WALL PANEL, SEE PLAN

310 STEEL JOIST AT PRECAST WALL
SCALE: NTS

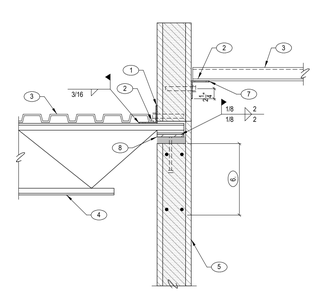

KEYNOTES:
1. CONTINUOUS L4x4x1/4 STEEL ANGLE W/ 5/8" DIA CONCRETE ANCHOR AT 32" O.C. W/ 5" MINIMUM EMBEDMENT
2. BOUNDARY ATTACHMENT, SEE PLAN
3. STEEL DECK, SEE PLAN
4. STEEL JOIST, SEE PLAN
5. MASONRY WALL, SEE PLAN
6. 16" DEEP BOND BEAM W/ (4) #4 BARS CONTINUOUS
7. CONT L4x4x1/4 LEDGER ANGLE W/ 3/4" DIA x 6" TITEN HD MASONRY ANCHORS AT 16" O.C.
8. 1/2" x 8" x 1'-0" BEARING PLATE W/ (2) 5/8" DIA x 8" LONG HEADED STUDS ON ±1 1/2" NON SHRINK GROUT

307 STEEL JOIST AT MASONRY WALL
SCALE: NTS

This drawing is the property of Ridge Structural Engineering, Inc. Legally, the drawing can NOT be copied in whole or in pieces. It is only to be used for the project and site specifically identified hereon and is not to be used on any other project. Contractor shall carefully review all dimensions, details, and conditions and report at once any error, inconsistency or omission discovered before construction. The contractor assumes full liability for deviations from the intent of these plans.

JOB NO.: 24.145	PROJECT MANAGER: KBB	CAD OPERATOR: GTC

Ridge Structural Engineering
1152 Bond Avenue, Suite B
Rexburg, ID 83440
phone: 208.227.8404
contact@ridgestructural.com

PROFESSIONAL ENGINEER LICENSED 14134 STATE OF IDAHO DAVID B. PORTER
03/17/2025

DATE

PHASE 1 PART B FOR:
TWIN FALLS COUNTY - WRIGHT AVE JAIL
2515 Wright Ave, Twin Falls, ID 83301
ROOF FRAMING DETAILS

Laughlin Ricks Architecture
architecture/planning
134 3RD Ave East * Twin Falls, Idaho 83301
(208) 736-8050

DATE: 03/17/2025
GTC Drawn
KBB Checked
24-145 PROJECT #

S1B-5.0

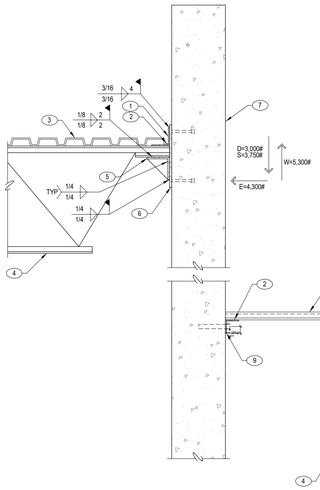

KEYNOTES:
1. CONTINUOUS L4x4x1/4 STEEL ANGLE, SEE TYPICAL DETAIL FOR SPLICING ANGLE AS REQUIRED
2. BOUNDARY ATTACHMENT, SEE PLAN
3. STEEL DECK, SEE PLAN
4. STEEL JOIST, SEE PLAN
5. L5x5x3/8 x 8" LONG CENTERED ON JOIST WELD 3/8" THICK STIFFENER PLATE TO ANGLE
6. 14" SQUARE EMBED PLATE DESIGNED BY PRECASTER FOR UNFACTORED LOADING SHOWN (CONSIDERING JOIST BEARING ECCENTRICITY)
7. INSULATED PRECAST CONCRETE WALL PANEL, SEE PLAN
8. STOP INSULATION 6" ABOVE DECK BEARING ELEVATION, SEE PLAN
9. CONTINUOUS L4x4x1/4 STEEL ANGLE W/ 5/8" DIA SCREW ANCHOR AT 16" O.C. W/ 5" MINIMUM EMBEDMENT, SEE TYPICAL DETAIL FOR SPLICING ANGLE AS REQUIRED

321 STEEL JOIST AT PRECAST WALL
SCALE: NTS

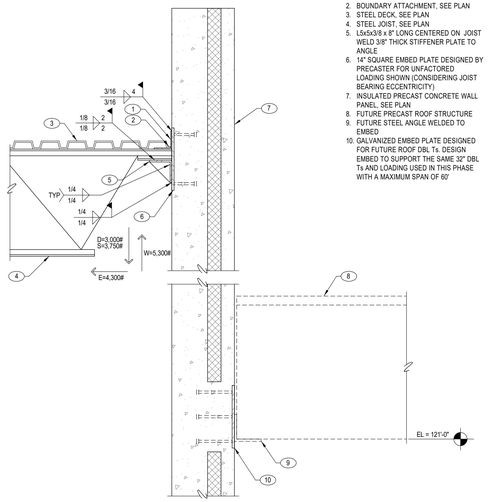

KEYNOTES:
1. CONTINUOUS L4x4x1/4 STEEL ANGLE, SEE TYPICAL DETAIL FOR SPLICING ANGLE AS REQUIRED
2. BOUNDARY ATTACHMENT, SEE PLAN
3. STEEL DECK, SEE PLAN
4. STEEL JOIST, SEE PLAN
5. L5x5x3/8 x 8" LONG CENTERED ON JOIST WELD 3/8" THICK STIFFENER PLATE TO ANGLE
6. 14" SQUARE EMBED PLATE DESIGNED BY PRECASTER FOR UNFACTORED LOADING SHOWN (CONSIDERING JOIST BEARING ECCENTRICITY)
7. INSULATED PRECAST CONCRETE WALL PANEL, SEE PLAN
8. FUTURE PRECAST ROOF STRUCTURE
9. FUTURE STEEL ANGLE WELDED TO EMBED
10. GALVANIZED EMBED PLATE DESIGNED FOR FUTURE ROOF DBL Ts. DESIGN EMBED TO SUPPORT THE SAME 32" DBL Ts AND LOADING USED IN THIS PHASE WITH A MAXIMUM SPAN OF 60'

319 STEEL JOIST AT PRECAST WALL
SCALE: NTS

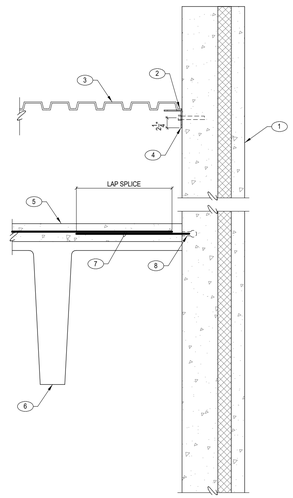

KEYNOTES:
1. INSULATED PRECAST CONCRETE WALL PANEL, SEE PLAN
2. BOUNDARY ATTACHMENT, SEE PLAN
3. STEEL DECK, SEE PLAN
4. CONTINUOUS L4x4x1/4 STEEL ANGLE W/ 5/8" DIA SCREW ANCHOR AT 32" O.C. W/ 5" MINIMUM EMBEDMENT
5. CONCRETE TOPPING SLAB, SEE PLAN
6. PRECAST CONCRETE DOUBLE-T, SEE PLAN
7. #4x24" LONG REBAR DOWELS W/ THREADED END
8. LOOP FERRULE INSERT TO RECEIVE #4 BAR AT 18" O.C. BY PRECASTER. MUST BE CAPABLE OF SUPPORTING A TENSION LOAD OF 1,500# (UNFACTORED, SEISMIC)

317 PRECAST DOUBLE T AT PRECAST WALL
SCALE: NTS

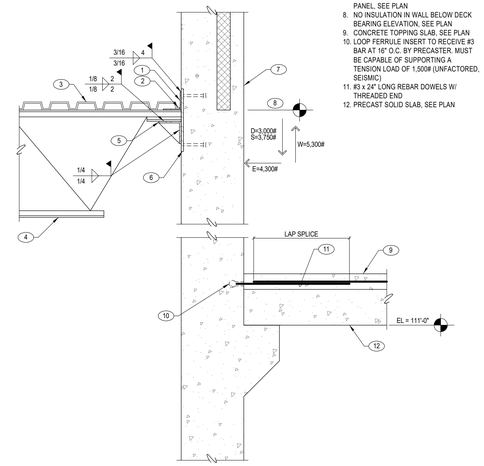

KEYNOTES:
1. CONTINUOUS L4x4x1/4 STEEL ANGLE, SEE TYPICAL DETAIL FOR SPLICING ANGLE AS REQUIRED
2. BOUNDARY ATTACHMENT, SEE PLAN
3. STEEL DECK, SEE PLAN
4. STEEL JOIST, SEE PLAN
5. L5x5x3/8 x 8" LONG CENTERED ON JOIST WELD 3/8" THICK STIFFENER PLATE TO ANGLE
6. 14" SQUARE EMBED PLATE DESIGNED BY PRECASTER FOR UNFACTORED LOADING SHOWN (CONSIDERING JOIST BEARING ECCENTRICITY)
7. INSULATED PRECAST CONCRETE WALL PANEL, SEE PLAN
8. NO INSULATION IN WALL BELOW DECK BEARING ELEVATION, SEE PLAN
9. CONCRETE TOPPING SLAB, SEE PLAN
10. LOOP FERRULE INSERT TO RECEIVE #3 BAR AT 18" O.C. BY PRECASTER. MUST BE CAPABLE OF SUPPORTING A TENSION LOAD OF 1,500# (UNFACTORED, SEISMIC)
11. #3 x 24" LONG REBAR DOWELS W/ THREADED END
12. PRECAST SOLID SLAB, SEE PLAN

315 STEEL JOIST AND PRECAST SOLID SLAB AT PRECAST WALL
SCALE: NTS

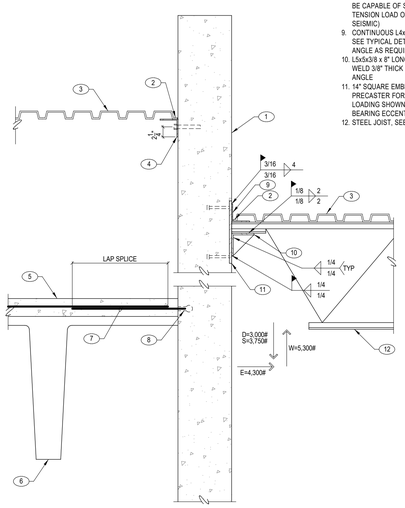

KEYNOTES:
1. INSULATED PRECAST CONCRETE WALL PANEL, SEE PLAN
2. BOUNDARY ATTACHMENT, SEE PLAN
3. STEEL DECK, SEE PLAN
4. STEEL JOIST, SEE PLAN
5. CONTINUOUS L4x4x1/4 STEEL ANGLE W/ 5/8" DIA SCREW ANCHOR AT 32" O.C. W/ 5" MINIMUM EMBEDMENT, SEE TYPICAL DETAIL FOR SPLICING ANGLE AS REQUIRED
6. PRECAST CONCRETE DOUBLE-T, SEE PLAN
7. #4x24" LONG REBAR DOWELS W/ THREADED END
8. LOOP FERRULE INSERT TO RECEIVE #4 BAR AT 18" O.C. BY PRECASTER. MUST BE CAPABLE OF SUPPORTING A TENSION LOAD OF 1,500# (UNFACTORED, SEISMIC)
9. CONTINUOUS L4x4x1/4 STEEL ANGLE, SEE TYPICAL DETAIL FOR SPLICING ANGLE AS REQUIRED
10. L5x5x3/8 x 8" LONG CENTERED ON JOIST WELD 3/8" THICK STIFFENER PLATE TO ANGLE
11. 14" SQUARE EMBED PLATE DESIGNED BY PRECASTER FOR UNFACTORED LOADING SHOWN (CONSIDERING JOIST BEARING ECCENTRICITY)
12. STEEL JOIST, SEE PLAN

322 STEEL JOIST AT PRECAST WALL
SCALE: NTS

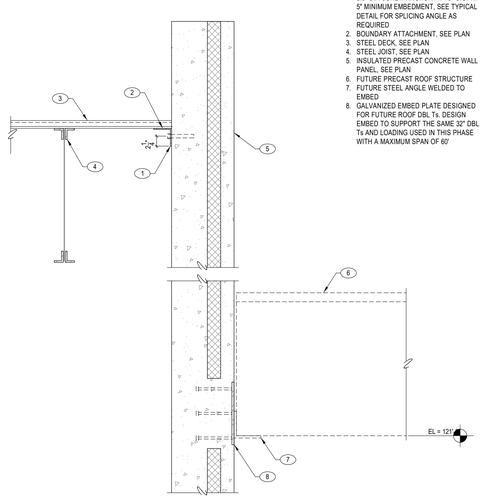

KEYNOTES:
1. CONTINUOUS L4x4x1/4 STEEL ANGLE W/ 5/8" DIA SCREW ANCHOR AT 16" O.C. W/ 5" MINIMUM EMBEDMENT, SEE TYPICAL DETAIL FOR SPLICING ANGLE AS REQUIRED
2. BOUNDARY ATTACHMENT, SEE PLAN
3. STEEL DECK, SEE PLAN
4. STEEL JOIST, SEE PLAN
5. INSULATED PRECAST CONCRETE WALL PANEL, SEE PLAN
6. FUTURE PRECAST ROOF STRUCTURE
7. FUTURE STEEL ANGLE WELDED TO EMBED
8. GALVANIZED EMBED PLATE DESIGNED FOR FUTURE ROOF DBL Ts. DESIGN EMBED TO SUPPORT THE SAME 32" DBL Ts AND LOADING USED IN THIS PHASE WITH A MAXIMUM SPAN OF 60'

320 STEEL JOIST AT PRECAST WALL
SCALE: NTS

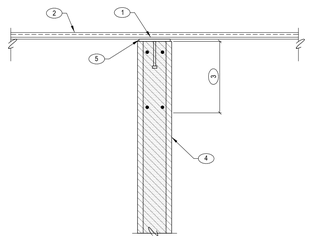

KEYNOTES:
1. BOUNDARY ATTACHMENT, SEE PLAN
2. STEEL DECK, SEE PLAN
3. CONT 16" DEEP (MIN) SOLID GROUTED BOND BEAM W/ (4) #4 BARS CONTINUOUS
4. MASONRY WALL, SEE PLAN
5. CONTINUOUS 1/2" x 7" WIDE EMBED PLATE W/ 5/8" DIA x 6" LONG HEADED STUDS AT 32" O.C.

318 STEEL ROOF DECKING AT MASONRY WALL
SCALE: NTS

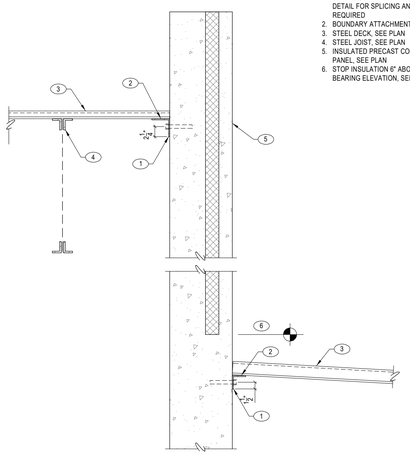

KEYNOTES:
1. CONTINUOUS L4x4x1/4 STEEL ANGLE W/ 5/8" DIA SCREW ANCHOR AT 16" O.C. W/ 5" MINIMUM EMBEDMENT, SEE TYPICAL DETAIL FOR SPLICING ANGLE AS REQUIRED
2. BOUNDARY ATTACHMENT, SEE PLAN
3. STEEL DECK, SEE PLAN
4. STEEL JOIST, SEE PLAN
5. INSULATED PRECAST CONCRETE WALL PANEL, SEE PLAN
6. STOP INSULATION 6" ABOVE DECK BEARING ELEVATION, SEE PLAN

316 STEEL JOIST AT PRECAST WALL
SCALE: NTS

This drawing is the property of Ridge Structural Engineering, Inc. Legally, the drawing can NOT be copied in whole or in pieces. It is only to be used for the project and site specifically identified hereon and is not to be used on any other project. Contractor shall carefully review all dimensions, details, and conditions and report at once any error, inconsistency or omission discovered before construction. The contractor assumes full liability for deviations from the intent of these plans.

JOB NO.: 24.145	PROJECT MANAGER: KBB	CAD OPERATOR: GTC

Ridge Structural Engineering
1152 Bond Avenue, Suite B
Rexburg, ID 83440
phone: 208.227.8404
contact@ridgestructural.com

PROFESSIONAL ENGINEER LICENSED 14134 STATE OF IDAHO DAVID B. POTTER 03/17/2025

DATE

PHASE 1 PART B FOR:
TWIN FALLS COUNTY - WRIGHT AVE JAIL
2515 Wright Ave, Twin Falls, ID 83301
ROOF FRAMING DETAILS

Laughlin Ricks Architecture
architecture/planning
134 3RD Ave East, * Twin Falls, Idaho 83301
(208) 736-8050

DATE: 03/17/2025
GTC Drawn
KBB Checked
24-145 PROJECT #

S1B-5.1

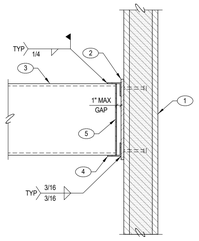

KEYNOTES:
1. MASONRY WALL, SEE PLAN
2. GALVANIZED 1/2"x6"x1'-6" EMBED PLATE W/ (4) 5/8"x5" HEADED STUDS
3. STEEL BEAM, SEE PLAN
4. L3x3x1/4 x 0'-4" (GALVANIZED), TOP AND BOTTOM
5. 1/4" THICK END PLATE

NOTES:
A. AFTER FIELD-WELD IS COMPLETE, PAINT ALL EXPOSED STEEL W/ GALVANIZING PAINT
B. GAP TOP AND BOTTOM ANGLES WIDE ENOUGH TO ALLOW BEAM TO BE ERECTED FROM SIDE, BUT NOT SO FAR AS TO INHIBIT ABILITY TO COMPLETE FIELD-WELD

332 STEEL BEAM AT MASONRY WALL
SCALE: NTS

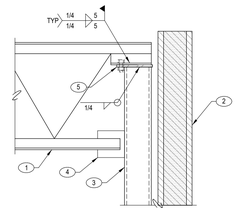

KEYNOTES:
1. STEEL GIRDER, SEE PLAN
2. MASONRY WALL, SEE PLAN
3. STEEL COLUMN, SEE PLAN
4. 6x6 STABILIZER PLATE AT GIRDER
5. 3/4" STEEL CAP PLATE W/ (2) 3/4" DIA A325 ERECTION BOLTS EACH GIRDER

NOTES:
A. DO NOT WELD BOTTOM CHORDS TO STABILIZER PLATES, UNO

329 STEEL FRAMING AT MASONRY WALL
SCALE: NTS

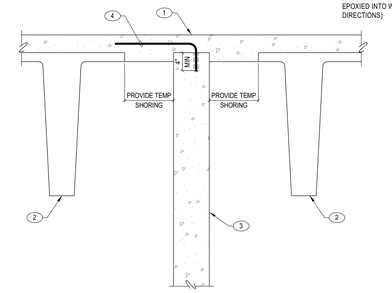

KEYNOTES:
1. CONCRETE TOPPING SLAB, SEE PLAN
2. PRECAST CONCRETE DOUBLE-T, SEE PLAN
3. PRECAST CONCRETE WALL PANEL, SEE PLAN
4. #4 DOWEL AT 18" O.C., DRILL AND EPOXIED INTO WALL (ALTERNATE DIRECTIONS)

325 PRECAST DOUBLE T AT PRECAST WALL
SCALE: NTS

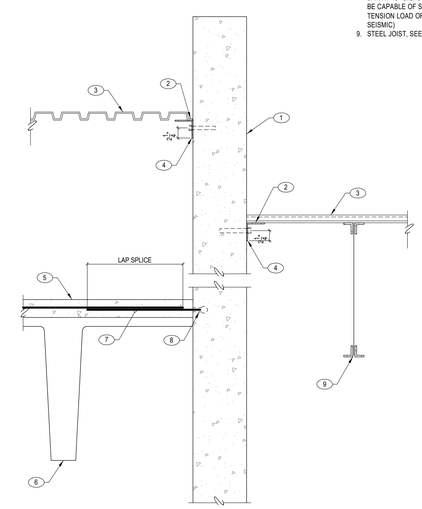

KEYNOTES:
1. PRECAST CONCRETE WALL PANEL, SEE PLAN
2. BOUNDARY ATTACHMENT, SEE PLAN
3. STEEL DECK, SEE PLAN
4. CONTINUOUS L4x4x1/4 STEEL ANGLE W/ 5/8" DIA SCREW ANCHOR AT 32" O.C. W/ 5" MINIMUM EMBEDMENT
5. CONCRETE TOPPING SLAB, SEE PLAN
6. PRECAST CONCRETE DOUBLE-T, SEE PLAN
7. #4x24" LONG REBAR DOWELS W/ THREADED END
8. LOOP FERRULE INSERT TO RECEIVE #4 BAR AT 18" O.C. BY PRECASTER. MUST BE CAPABLE OF SUPPORTING A TENSION LOAD OF 1,500# (UNFACTORED, SEISMIC)
9. STEEL JOIST, SEE PLAN

323 STEEL JOIST AT PRECAST WALL
SCALE: NTS

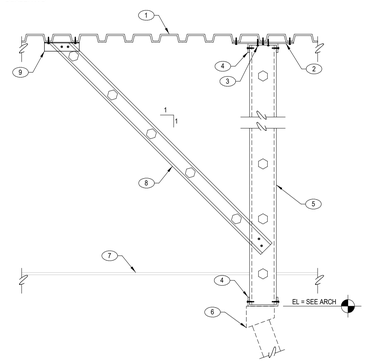

KEYNOTES:
1. STEEL DECK, SEE PLAN
2. CONT 54 MIL FLAT PLATE WIDE ENOUGH TO SCREW TO THE BOTTOM OF (3) DECK FLUTES. ATTACH W/ (3) ROWS OF #10 SCREWS AT 12" O.C.
3. (2) #10 SCREWS AT 8" O.C.
4. CONT 600T125-43 TRACK
5. 600S162-43 STUDS AT 16" O.C. W/ (2) #10 SCREWS INTO TOP AND BOTTOM TRACK
6. WINDOW SYSTEM BY OTHERS, MUST BE ABLE TO ACCOMMODATE 3/8" OF VERTICAL WALL MOVEMENT
7. DROP CEILING, SEE ARCH
8. 362S162-43 KICKER AT EACH STUD W/ (2) #10 SCREWS EACH END. KICKER CAN BE INSTALLED ON EITHER SIDE OF STUD WALL
9. L2x2x54 MIL ANGLE W/ (2) #10 SCREWS

NOTES:
A. AT 'SIM' CONT 54 MIL FLAT PLATE NOT REQUIRED WHERE WALLS RUN PERPENDICULAR TO DECK FLUTES

330 SUSPENDED STEEL STUD WALL AT STEEL DECK
SCALE: NTS

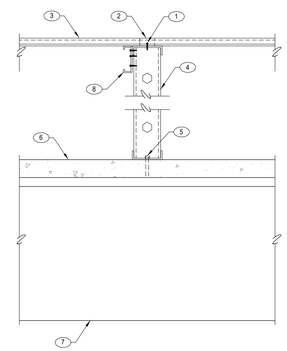

KEYNOTES:
1. DECK ATTACHMENT, SEE PLAN
2. LAP ENDS AT SUPPORT
3. STEEL DECK, SEE PLAN
4. STEEL STUD WALL W/ TOP AND BOTTOM TRACK PER PLAN
5. 1/2"x4" SCREW ANCHOR AT 32" O.C.
6. CONCRETE TOPPING SLAB, SEE PLAN
7. PRECAST CONCRETE DOUBLE-T, SEE PLAN
8. CONT STUD W/ #10 SCREWS AT 12" O.C. INTO TRACK AND (2) #10 SCREWS AT EACH STUD

326 STEEL STUD PONY WALL AT PRECAST DOUBLE T
SCALE: NTS

KEYNOTES:
1. STEEL GIRDER, SEE PLAN
2. STEEL JOIST, SEE PLAN
3. STEEL DECK, SEE PLAN
4. PROVIDE (2) 3/4" DIA A325 ERECTION BOLTS AT JOISTS SPANNING 40'-0" OR MORE
5. GIRDER BOTTOM CHORD BRACE BY JOIST MANUFACTURER, TYPICAL AT JOIST NEAREST MID-SPAN OF GIRDER

327 STEEL JOIST AT GIRDER JOIST
SCALE: NTS

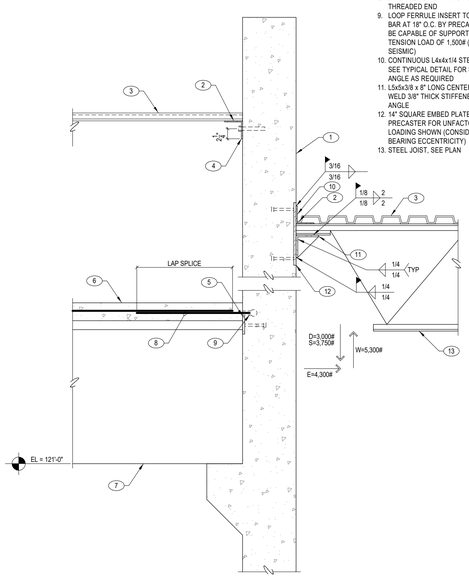

KEYNOTES:
1. PRECAST CONCRETE WALL PANEL, SEE PLAN
2. BOUNDARY ATTACHMENT, SEE PLAN
3. STEEL DECK, SEE PLAN
4. CONTINUOUS L4x4x1/4 STEEL ANGLE W/ 5/8" DIA SCREW ANCHOR AT 32" O.C. W/ 5" MINIMUM EMBEDMENT
5. CONNECTION BY PRECASTER
6. CONCRETE TOPPING SLAB, SEE PLAN
7. PRECAST CONCRETE DOUBLE-T, SEE PLAN
8. #4x24" LONG REBAR DOWELS W/ THREADED END
9. LOOP FERRULE INSERT TO RECEIVE #4 BAR AT 18" O.C. BY PRECASTER. MUST BE CAPABLE OF SUPPORTING A TENSION LOAD OF 1,500# (UNFACTORED, SEISMIC)
10. CONTINUOUS L4x4x1/4 STEEL ANGLE, SEE TYPICAL DETAIL FOR SPLICING ANGLE AS REQUIRED
11. L5x5x3/8 x 8" LONG CENTERED ON JOIST WELD 3/8" THICK STIFFENER PLATE TO ANGLE
12. 14" SQUARE EMBED PLATE DESIGNED BY PRECASTER FOR UNFACTORED LOADING SHOWN (CONSIDERING JOIST BEARING ECCENTRICITY).
13. STEEL JOIST, SEE PLAN

324 PRECAST DOUBLE T AT PRECAST WALL
SCALE: NTS

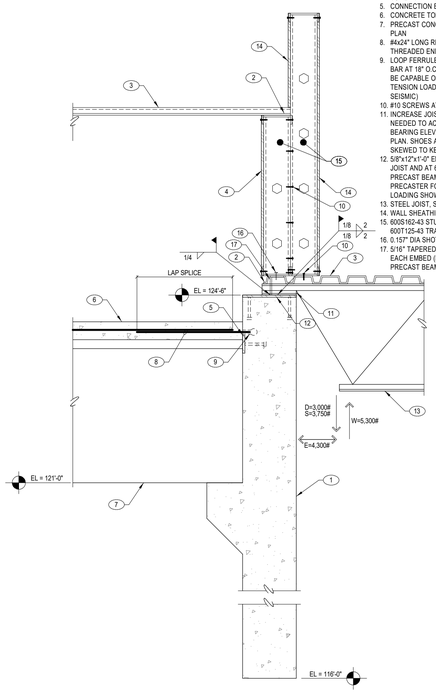

KEYNOTES:
1. PRECAST CONCRETE BEAM, SEE PLAN
2. BOUNDARY ATTACHMENT, SEE PLAN
3. STEEL DECK, SEE PLAN
4. 7/16" FIRE-RATED APA SHEATHING W/ #8 SCREWS AT PANEL EDGES
5. CONNECTION BY PRECASTER
6. CONCRETE TOPPING SLAB, SEE PLAN
7. PRECAST CONCRETE DOUBLE-T, SEE PLAN
8. #4x24" LONG REBAR DOWELS W/ THREADED END
9. LOOP FERRULE INSERT TO RECEIVE #4 BAR AT 18" O.C. BY PRECASTER. MUST BE CAPABLE OF SUPPORTING A TENSION LOAD OF 1,500# (UNFACTORED, SEISMIC)
10. #10 SCREWS AT 8" O.C.
11. INCREASE JOIST SHOE DEPTH AS NEEDED TO ACHIEVE PROPER DECK BEARING ELEVATION SPECIFIED ON PLAN. SHOES ALSO NEED TO BE SKEWED TO KEEP TOP OF JOIST FLAT
12. 5/8"x12"x1'-0" EMBED PLATE AT EACH JOIST AND AT 6'-0" O.C. FOR LENGTH OF PRECAST BEAM. DESIGNED BY PRECASTER FOR UNFACTORED LOADING SHOWN
13. STEEL JOIST, SEE PLAN
14. WALL SHEATHING PER ARCH
15. 600S162-43 STUDS AT 16" O.C. W/ 600T125-43 TRACK TOP AND BOTTOM
16. 0.157" DIA SHOT PINS AT 8" O.C.
17. 5/16" TAPERED BENT PLATE BETWEEN EACH EMBED (FULL LENGTH OF PRECAST BEAM)

331 PRECAST DOUBLE T AT PRECAST BEAM
SCALE: NTS

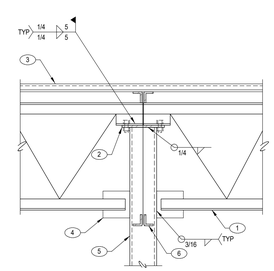

KEYNOTES:
1. STEEL GIRDER, SEE PLAN
2. 3/4" STEEL CAP PLATE W/ (2) 3/4" DIA A325 ERECTION BOLTS EACH GIRDER
3. STEEL DECK, SEE PLAN
4. 6x6 STABILIZER PLATE AT GIRDER
5. STEEL COLUMN, SEE PLAN
6. STEEL JOIST, SEE PLAN

NOTES:
A. DO NOT WELD BOTTOM CHORDS TO STABILIZER PLATES, UNO

328 STEEL JOIST AT STEEL COLUMN
SCALE: NTS

This drawing is the property of Ridge Structural Engineering, Inc. Legally, the drawing can NOT be copied in whole or in pieces. It is only to be used for the project and site specifically identified hereon and is not to be used on any other project. Contractor shall carefully review all dimensions, details, and conditions and report at once any error, inconsistency or omission discovered before construction. The contractor assumes full liability for deviations from the intent of these plans.

JOB NO.: 24.145	PROJECT MANAGER: KBB	CAD OPERATOR: GTC

Ridge Structural Engineering
1152 Bond Avenue, Suite B
Rexburg, ID 83440
phone: 208.227.8404
contact@ridgestructural.com

PROFESSIONAL ENGINEER LICENSED 14134 STATE OF IDAHO DAVID B. PORTER 03/17/2025

DATE

PHASE 1 PART B FOR:
TWIN FALLS COUNTY - WRIGHT AVE JAIL
2515 Wright Ave, Twin Falls, ID 83301
ROOF FRAMING DETAILS

Laughlin Ricks Architecture
architecture/planning
134 3RD Ave East, * Twin Falls, Idaho 83301
(208) 736-6050

DATE: 03/17/2025
GTC Drawn
KBB Checked
24-145 PROJECT #

S1B-5.2

SNOW DRIFT LOAD DIAGRAM

DRIFT NUMBER	MAXIMUM DRIFT LOAD	LENGTH OF DRIFT (L)
SD-1	19 PSF	9'-0"
SD-2	24 PSF	10'-9"
SD-3	27 PSF	10'-9"
SD-4	37 PSF	8'-6"
SD-5	35 PSF	8'-0"

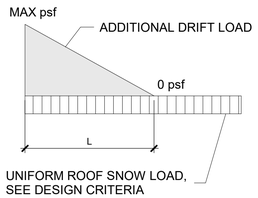

POINT LOAD (PL) SCHEDULE

LOADS ARE UNFACTORED. SEE ROOF FRAMING PLANS FOR ADDITIONAL POINT LOADS REQUIRED IN ANALYSIS FROM MECHANICAL UNITS.

PL1 DEAD = 1,500 # LIVE = 2,750 #

PL2 DEAD = 700 # LIVE = 1,250 #

LATERAL LINE LOADS

LOADS ARE UNFACTORED. LOADS ARE APPLIED TO THE WALLS AT THE DIAPHRAGM ELEVATION. LOADING SHOWN FOR THE SECOND FLOOR / MEZZANINE IS THE ADDITIONAL SHEAR AT THAT LEVEL AND DOES NOT INCLUDE THE LOAD FROM THE ROOF DIAPHRAGM. THE TWO LOADS MUST BE SUMMED TOGETHER TO ATTAIN THE TOTAL SHEAR DEMAND IN THE WALL. LOAD ARE REVERSIBLE FROM DIRECTION SHOWN.

E= ### (SEISMIC LOAD IN KIPS)
W= ### (WIND LOAD IN KIPS)

LINE LOAD LEGEND

LOADS ARE UNFACTORED

DEAD = 950 PLF SNOW = N/A PLF LIVE = N/A PLF

DEAD = 1,250 PLF SNOW = N/A PLF LIVE = N/A PLF

DEAD = 510 PLF SNOW = 650 PLF LIVE = N/A PLF

THE JOIST MANUFACTURER SHALL DESIGN ALL JOISTS AND SUPPLY ADDITIONAL BRIDGING AS REQUIRED FOR THE NET UPLIFT WIND LOAD USING THE FOLLOWING UNFACTORED LOADS: DL=20 PSF; WIND (a= 11.4 FT):

ZONE 1 (WHITE) = 37.5 PSF
ZONE 2 (LIGHT BLUE) = 49.7 PSF
ZONE 3 (GREEN) = 60.5 PSF

AREA LOAD LEGEND

LOADS ARE UNFACTORED. DEAD LOAD DOES NOT INCLUDE WEIGHT OF PRECAST STRUCTURE, BUT DOES INCLUDE THE WEIGHT OF THE APPLICABLE TOPPING SLAB AS MEAURED BY ITS MINIMUM THICKNESS SPECIFIED ON DRAWINGS. THE PRECAST ENGINEERING SOFTWARE USED IN DESIGN SHALL ACCOUNT FOR THE EXTRA DEAD LOAD FROM INCREASED TOPPING SLAB THICKNESS AT MEMBER ENDS TO COUNTERACT MEMBER CAMBERS.

DEAD = 53 PSF SNOW = 25 PSF LIVE = N/A PSF

DEAD = 54 PSF SNOW = N/A PSF LIVE = 100 PSF

DEAD = 54 PSF SNOW = N/A PSF LIVE = 40 PSF

DEAD = 54 PSF SNOW = N/A PSF LIVE = 80 PSF

DEAD = 54 PSF SNOW = N/A PSF LIVE = 125 PSF

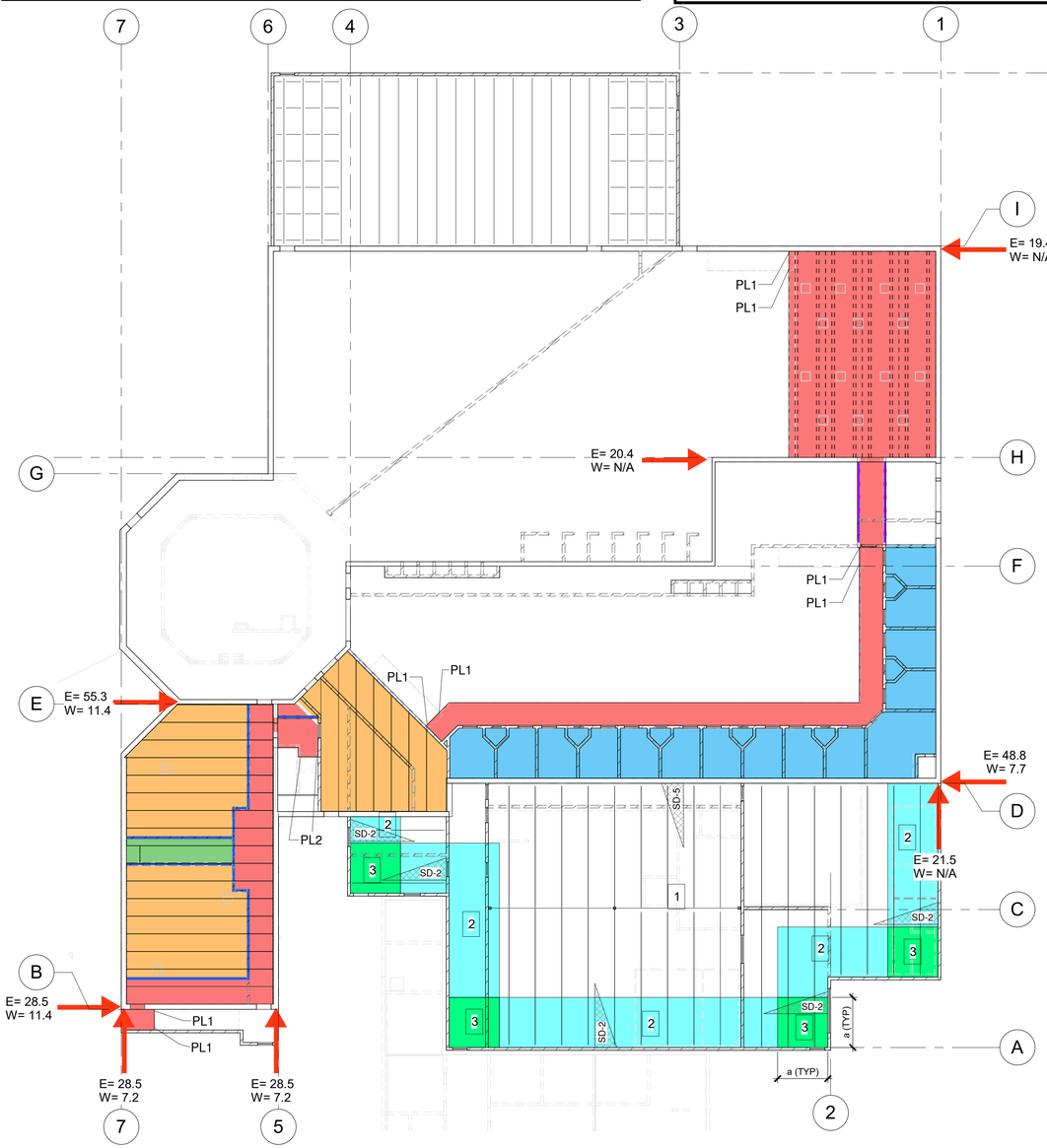

1 MEZZANINE / SECOND FLOOR LOADING KEY PLAN
SCALE: 1/16" = 1'-0"

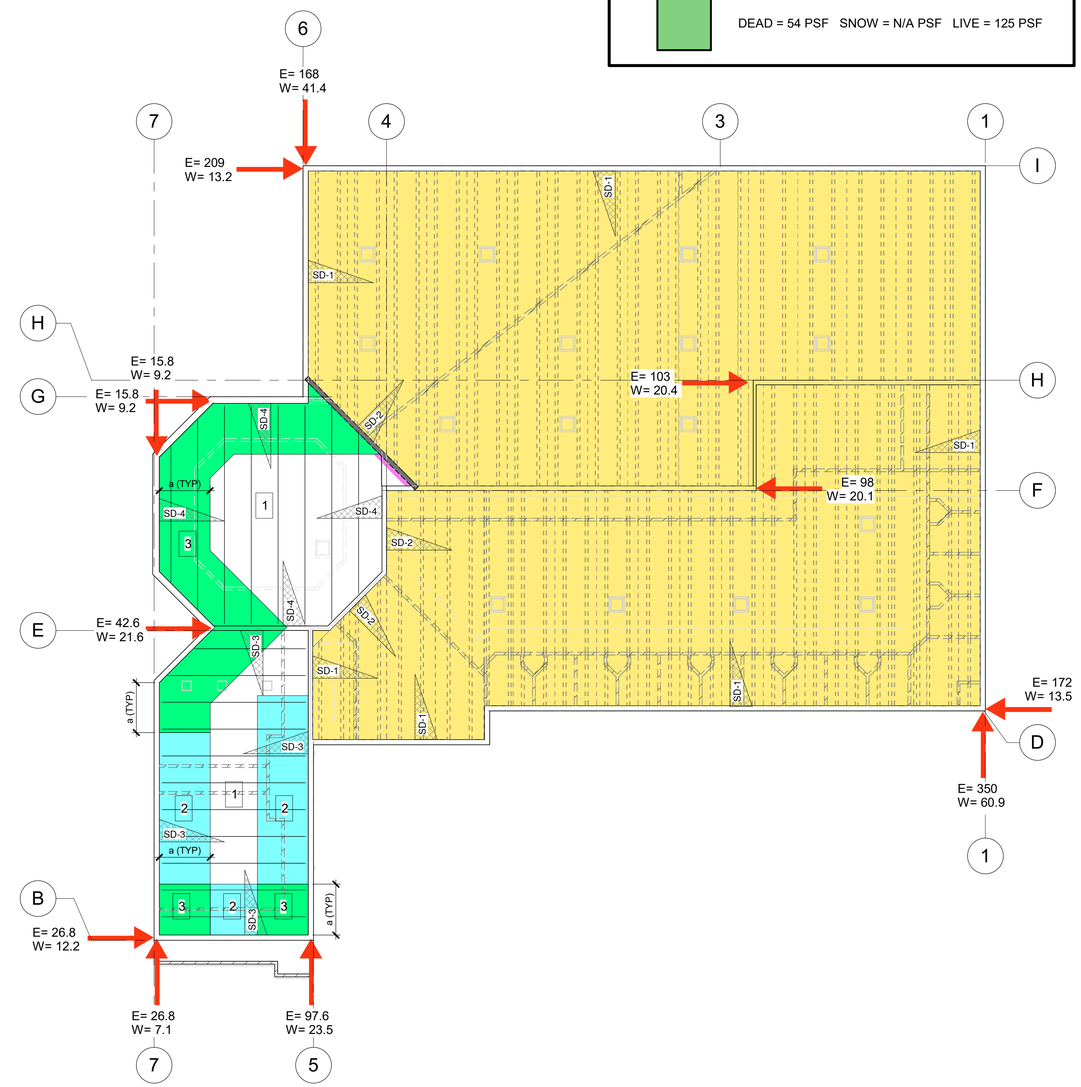

2 ROOF LOADING KEY PLAN
SCALE: 1/16" = 1'-0"

This drawing is the property of Ridge Structural Engineering, Inc. Legally, the drawing can NOT be copied in whole or in pieces. It is only to be used for the project and site specifically identified hereon and is not to be used on any other project. Contractor shall carefully review all dimensions, details, and conditions and report at once any error, inconsistency or omission discovered before construction. The contractor assumes full liability for deviations from the intent of these plans.

JOB NO.: 24.145 | PROJECT MANAGER: KBB | CAD OPERATOR: GTC

Ridge Structural Engineering
1152 Bond Avenue, Suite B
Rexburg, ID 83440
phone: 208.227.8404
contact@ridgestructural.com

PROFESSIONAL ENGINEER LICENSED 14134 STATE OF IDAHO DAVID B. PORTER
03/17/2025

DATE

PHASE 1 PART B FOR:
TWIN FALLS COUNTY - WRIGHT AVE JAIL
2515 Wright Ave, Twin Falls, ID 83301
ROOF AND FLOOR LOADING KEY PLANS

Laughlin Ricks Architecture
architecture/planning
134 3RD Ave East, * Twin Falls, Idaho 83301
(208) 736-8050

DATE: 03/17/2025
GTC Drawn | KBB Checked
24-145 PROJECT #

S1B-6.0

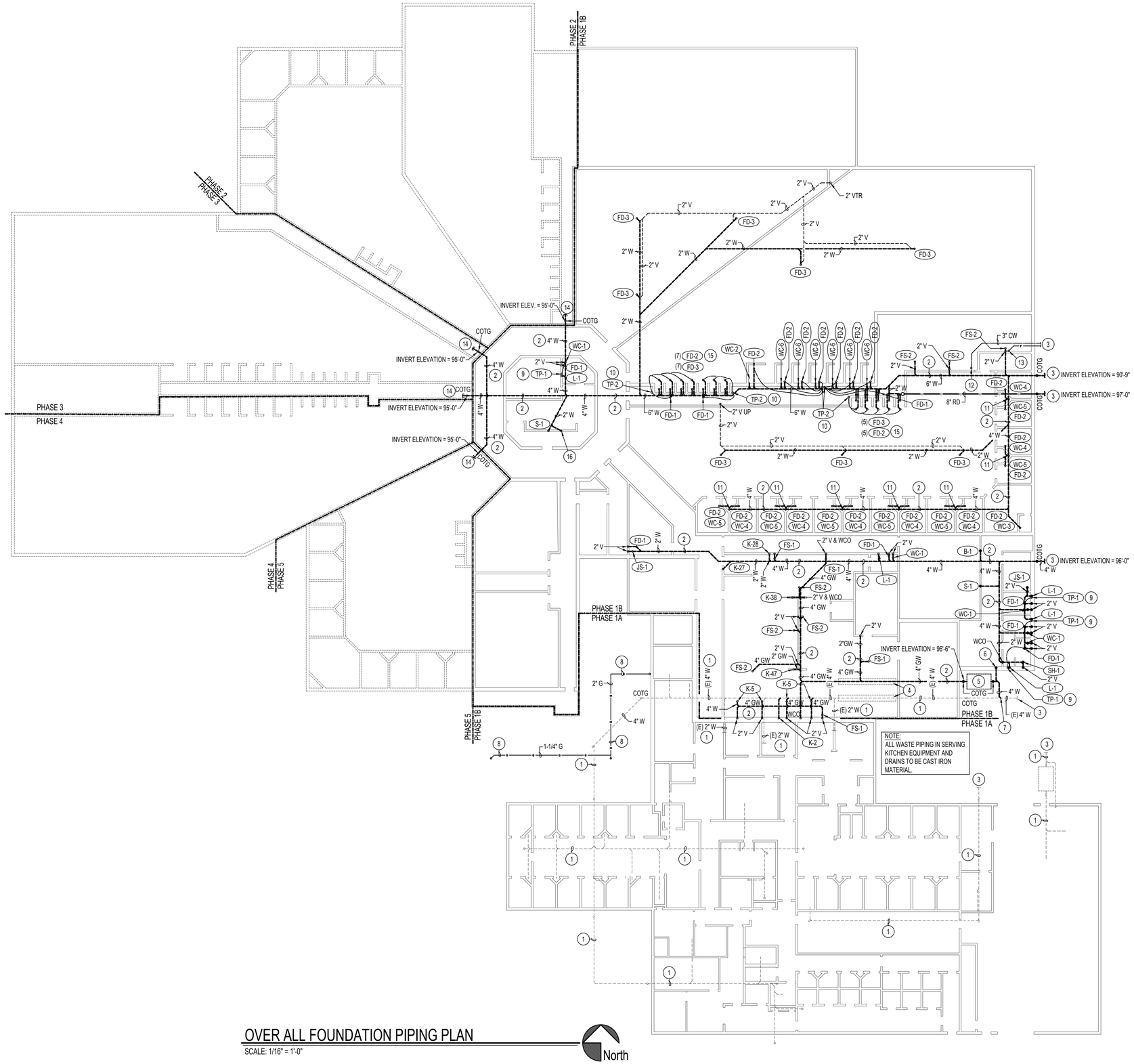

OVER ALL FOUNDATION PIPING PLAN

SCALE: 1/16" = 1'-0"

North

PLAN NOTES:

1. EXISTING WASTE LINE TO BE INSTALLED UNDER PHASE 1A PORTION OF BUILDING CONTRACT. REFER TO PHASE 1A DRAWINGS. FIELD VERIFY EXACT LOCATION AND ELEVATION OF EXISTING WASTE PIPING BELOW NEW PHASE 1B CONSTRUCTION AND PROTECT DURING PROJECT. CONNECT NEW WASTE PIPING TO EXISTING AS SHOWN.
2. INSTALL NEW WASTE PIPING UNDER PHASE 1B PORTION OF PROJECT. ALL NEW WASTE PIPING TO BE GRADED AT 1/4" SLOPE PER FOOT.
3. REFER TO UTILITY SITE PLAN FOR CONTINUATION OF PIPING.
4. PROVIDE INSULATION BOARD OVER WASTE PIPING BELOW FREEZER AND COOLER UNITS. REFER TO DETAIL C/P1B-3.2.
5. PROVIDE AND INSTALL GREASE INTERCEPTOR FOR KITCHEN WASTE. COORDINATE ACTUAL LOCATION WITH BUILDING STRUCTURE. REFER TO DETAIL A/P1B-3.3 FOR TYPICAL INSTALLATION.
6. RISE 3" VENT UP IN WALL. REFER TO SHEET P1B-1.1 FOR CONTINUATION.
7. CONNECT WASTE PIPING FROM GREASE INTERCEPTOR TO EXISTING WASTE LINE FROM PHASE 1A. FIELD VERIFY EXACT LOCATION AND ELEVATION OF EXISTING PIPING.
8. UNDERGROUND GAS LINE TO EMERGENCY GENERATORS. COORDINATE WITH EXISTING WASTE LINE FROM PHASE 1A AND WITH OTHER UTILITIES ABOVE AND BELOW GRADE.
9. PROVIDE SINGLE TRAP PRIMER BELOW LAVATORY ABOVE FLOOR. DROP 1/2" COLD WATER LINE DOWN AND CONNECT TO ADJACENT FLOOR DRAIN. REFER TO DETAIL M/P1B-3.1 FOR TYPICAL INSTALLATION.
10. PROVIDE MULTIPLE TRAP PRIMER DEVICE ABOVE FLOOR. DROP DOWN 1/2" COLD WATER LINE FOR EACH DRAIN SERVED AND CONNECT TO FLOOR DRAIN. REFER TO DETAIL J/P1B-3.1 FOR TYPICAL INSTALLATION.
11. RISE 4" WASTE LINE UP THRU FLOOR IN UTILITY CHASE. CONNECT TO FIXTURES IN (4) CELLS ABOVE. SEE LARGE SCALE PLANS ON SHEET P1B-2.1 FOR PIPING REQUIRED IN UTILITY CHASE.
12. 3" DOMESTIC WATER SERVICE TO BUILDING. (SIZED FOR PHASE 1A, PHASE 1B ADDITION, AND FOR FUTURE PHASES 2 THRU 5.) RUN PIPING BELOW FLOOR AS SHOWN AND RISE UP TO CONNECT TO MAIN SHUT-OFF VALVE AND PRESSURE REDUCING STATION. REFER TO SHEET P1B-1.1 FOR LOCATION OF PRV STATION AND TO DETAIL K/P1B-3.1 FOR TYPICAL PIPING CONNECTIONS.
13. FIRE SERVICE LINE TO BUILDING BY FIRE SPRINKLER CONTRACTOR. COORDINATE WITH OTHER PIPING IN THIS AREA. REFER TO UTILITIES SITE PLAN FOR CONTINUATION OF FIRE SERVICE LINE. RISE FIRE LINE UP TO CONNECT TO MAIN SHUT-OFF VALVE AND FIRE ALARM VALVE. REFER TO SHEET P1B-1.1 FOR LOCATION OF FAV AND TO DETAIL L/P1B-3.1 FOR TYPICAL FIRE RISER AND ALARM VALVE PIPING CONNECTIONS.
14. EXTEND 4" WASTE LINE OUT OF BUILDING FOR FUTURE CONSTRUCTION PHASE AND CAP END OF LINE 36" BEYOND FOOTINGS. PIPING TO BE 3'-0" BELOW GRADE. PROVIDE CLEAN OUT TO GRADE IN LINE FOR FUTURE LINE LOCATION.
15. CONNECT 1/2" COLD WATER LINE FROM MULTIPLE PORT TRAP PRIMER LOCATED ABOVE FLOOR TO FLOOR DRAIN IN DRYING AREA. REFER TO DETAIL J/P1B-3.1 FOR TYPICAL INSTALLATION.
16. 1-1/2" WASTE LINE DOWN FROM BOTTLE FILLER (B-1) ON UPPER LEVEL. TRANSITION TO 2" WASTE LINE BELOW EXTENDING THRU FLOOR.

02.28.25

DATE

AN ADDITION FOR:
TWIN FALLS COUNTY JAIL
2515 Wright Ave, Twin Falls, ID 83301
PHASE 1 PART B - PLUMBING FLOOR PLAN - PART A

Laughlin Ricks Architecture
architecture/planning
134 3RD AVE. E. * Twin Falls, Idaho 83301
(208) 736-8050 Fax: (208) 733-0950

PROFESSIONAL ENGINEER REGISTERED
P-18184
Feb 27, 2025
DATE OF IDAHO
DAVID L. HANSEN

Engineered Systems Associates
1355 EAST CENTER
POCATELLO, IDAHO 83201
PHONE: (208) 233-0501
FAX: (208) 233-0529
EMAIL: esa@engsystems.com
ESA JOB NUMBER: 24048

DATE: 02/28/2025

M JENSEN Drawn | D HANSEN Checked

P1B-1.0

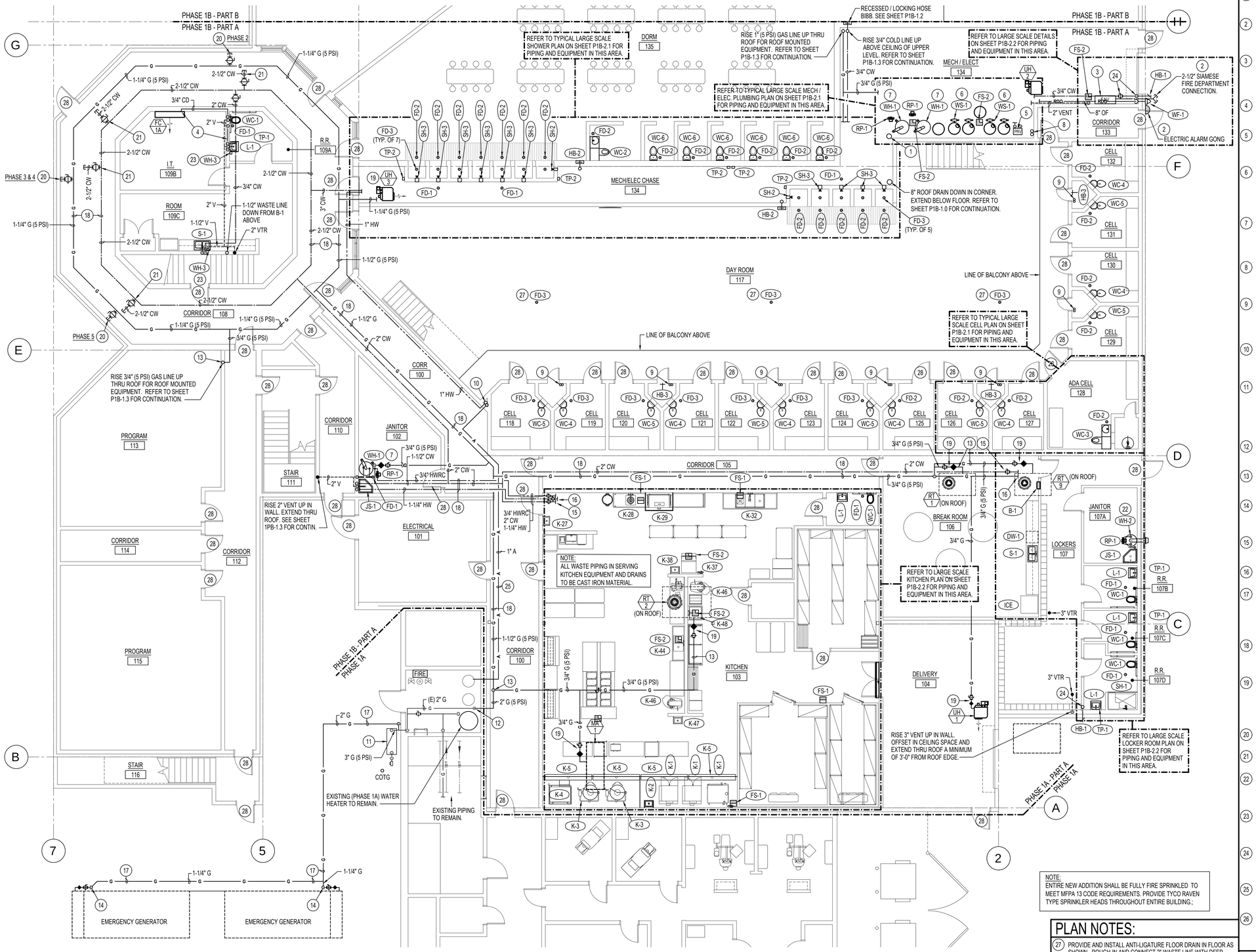

PHASE 1 PART B - PLUMBING FLOOR PLAN - PART A

SCALE: 1/8" = 1'-0"

North

PLAN NOTES:

1. DROP 8" OVERFLOW DRAIN DOWN AS REQUIRED TO PASS BELOW MEZZANINE WALKWAY. KEEP PIPING AS HIGH AS POSSIBLE BELOW WALKWAY.
2. INSTALL SIAMESE FIRE DEPARTMENT CONNECTION AND ELECTRIC ALARM GONG ON WALL. PRIOR APPROVAL OF LOCATION MUST BE OBTAINED FROM LOCAL FIRE MARSHALL BEFORE INSTALLATION.
3. INSTALL FIRE RISER AND ALARM VALVE IN THIS LOCATION. FIRE SPRINKLER SYSTEM TO BE DESIGNED AND SIZED BY FIRE SPRINKLER CONTRACTOR. PROVIDE LARGE ENOUGH RISER TO ACCOMMODATE FUTURE PHASES 2, 3, 4, & 5. REFER TO DETAIL L/P1B-3.1 FOR TYPICAL RISER AND ALARM PIPING CONNECTIONS.
4. RUN 3/4" CONDENSATE DRAIN LINE FROM FAN COIL THRU WALL TO NEAREST LAVATORY. DROP PIPING DOWN BELOW FIXTURE LEVEL AND CONNECT WITH DISHWASHER TYPE FITTING.
5. RISE 3" COLD WATER SERVICE LINE UP THRU FLOOR AND CONNECT TO MAIN SHUT-OFF VALVE AND PRESSURE REDUCING STATION. REFER TO DETAIL K/P1B-3.1 FOR TYPICAL INSTALLATION AND PIPING CONNECTIONS.
6. INSTALL DUPLEX WATER SOFTENER AS INDICATED IN PLUMBING FIXTURE SCHEDULE. CONNECT TO 3" COLD WATER LINE AND PROVIDE BY-PASS VALVE. REFER TO DETAIL N/P1B-1.2 FOR TYPICAL INSTALLATION OF WATER SOFTENER. (ALL WATER IN BUILDING INCLUDING FUTURE PHASES TO BE CONNECT TO SOFT WATER SYSTEM.)
7. INSTALL GAS FIRED WATER HEATER AS INDICATED IN PLUMBING FIXTURE SCHEDULE. CONNECT TO 1-1/2" HOT AS COLD (SOFT) WATER LINES. REFER TO DETAIL H/P1B-3.2 FOR TYPICAL PIPE CONNECTIONS AND FOR EXPANSION TANK AND MIXING VALVE TO BE SUPPLIED WITH EQUIPMENT.
8. RISE 2-1/2" COLD WATER AND 1-1/4" HOT WATER LINES UP IN MECHANICAL ROOM 134 TO ABOVE CEILING OF UPPER LEVEL. REFER TO SHEET P1B-1.3 FOR CONTINUATION OF PIPING ON UPPER LEVEL.
9. 1" COLD WATER AND 3/4" HOT WATER LINES DOWN FROM ABOVE. COORDINATE PIPING WITH DUCTWORK IN CHASES. (SEE MECHANICAL DRAWINGS.) CONNECT WATER LINES TO FIXTURES AND TO TRAP PRIMER. REFER TO LARGE SCALE PLAN ON SHEET P1B-2.1 FOR TYPICAL PIPING TO CELLS.
10. RAISE 1" COMPRESSED AIR AND 1" HOT WATER LINES UP IN CHASE TO UPPER LEVEL. RUN IN CEILING SPACE OF MAIN LEVEL AS SHOWN. REFER TO SHEET P1B-1.3 FOR CONTINUATION OF PIPING ON UPPER LEVEL.
11. EXISTING GAS METER (NEW UNDER PHASE 1A CONSTRUCTION) CAPABLE OF 18,750,000 BTU TOTAL FUTURE CAPACITY WITH 5 PSI DISCHARGE DELIVERY PRESSURE. INCREASE OUTPUT TO 16,300,000 BTU FOR CURRENT BUILDING PHASES 1A AND 1B. FUTURE ESTIMATED LOAD FOR PHASE 2 = 900,000, PHASE 3 = 450,000, PHASE 4 = 450,000 AND PHASE 5 = 450,000 REFER TO GAS LOAD CALCULATIONS ON SHEET P1B-3.3
12. CONNECT NEW 2" GAS LINE (5 PSI) TO EXISTING 2" GAS LINE IN MECHANICAL ROOM. EXTEND INTO NEW ADDITION (PHASE 1B) ABOVE CORRIDOR CEILINGS AND RUN AS SHOWN.
13. RISE 3/4" GAS LINE (5 PSI) UP THRU ROOF FOR ROOF MOUNTED EQUIPMENT. COORDINATE GAS PIPING ON ROOF WITH EQUIPMENT.
14. RISE 1-1/4" (5 PSI) GAS LINE UP ABOVE GRADE LEVEL. PROVIDE SHUT-OFF VALVE AND PRESSURE REGULATOR (5psi TO 1.5 psi) IN LINE. CONNECT 1-1/2" (1.5 PSI) GAS LINE TO EMERGENCY GENERATOR WITH FLEXIBLE HOSE.
15. INSTALL BALL VALVE IN ALL WATER LINES FOR ISOLATION OF PLUMBING FIXTURES. PROVIDE ACCESS DOOR IN CEILING BELOW VALVE.
16. REFER TO LARGE SCALE PLAN ON SHEET P1B-2.2 FOR CONTINUATION OF PIPING.
17. (5 psi) GAS LINE TO BE RUN BELOW GRADE TO EMERGENCY GENERATORS. COORDINATE ROUTING OF GAS LINE WITH BUILDING FOUNDATIONS AND FOOTING AND WITH OTHER UTILITIES IN THE AREA. (SEWER, FIRE WATER SERVICE LINE, DOMESTIC WATER SERVICE LINE, HIGH PRESSURE GAS PIPING, ELECTRICAL SERVICE, ETC.)
18. PIPING LINES INSIDE BUILDING TO BE RUN ABOVE CORRIDOR CEILINGS AND SUPPORTED BY ROOF STRUCTURE. COORDINATE PIPE ROUTING WITH OTHER PIPING, LIGHT FIXTURES, DUCTWORK, ETC. REFER TO OTHER TRADES FOR COORDINATION.
19. HVAC EQUIPMENT BY MECHANICAL OR KITCHEN EQUIPMENT CONTRACTOR. PLUMBING CONTRACTOR TO ROUGH-IN AND CONNECT 5 PSI GAS LINE TO UNIT. PROVIDE PRESSURE REGULATOR (5 PSI TO 0.5 PSI), SHUT-OFF VALVE AND FLEXIBLE HOSE. REFER TO DETAIL J/P1B-3.2 FOR TYPICAL GAS LINE CONNECTION.
20. PROVIDE 1-1/4" GAS LINE STUB (5 PSI) FOR FUTURE CONNECTION. INSTALL SHUT-OFF VALVE AND CAP END OF LINE.
21. PROVIDE 2-1/2" COLD WATER STUB FOR FUTURE CONNECTION. INSTALL SHUT-OFF VALVE AND CAP END OF LINE.
22. GAS FIRED WATER HEATER WITH DIRECT VENT THRU WALL. REFER TO DETAIL L/P1B-3.2 FOR TYPICAL INSTALLATION OF WATER HEATER, PIPING, AND VENT IN WALL. KEEP VENT THRU WALL AT LEAST 10'-0" ABOVE GRADE LEVEL.
23. INSTALL INSTANTANEOUS WATER HEATER BELOW LAVATORY AND CONNECT TO COLD WATER LINE. RISE HOT WATER LINE UP AND CONNECT TO FIXTURE. REFER TO DETAIL A/P1B-1.2 FOR TYPICAL INSTALLATION.
24. INSTALL EXTERIOR HOSE BIBB AS CALLED OUT IN SCHEDULE. REFER TO DETAIL B/P1B-3.1 FOR TYPICAL INSTALLATION. PROVIDE SHUT-OFF VALVE ABOVE CEILING. PROVIDE ACCESS DOOR IN CEILING AS REQUIRED. LABEL VALVE AS "HOSE BIBB SHUT-OFF".
25. CONNECT NEW 1" AIR LINE TO EXISTING AIR COMPRESSOR IN PHASE 1A OF PROJECT. RUN NEW PIPING ABOVE CEILINGS TO NEW CELLS AS SHOWN.
26. RUN 3/4" AIR LINE FROM EACH AIRLOCK 9500 DOOR LOCKS INSIDE CONDUIT TO CONNECT TO MANIFOLD JUNCTION BOXES LOCATED ON UPPER LEVEL. SEE SHEET P1B-1.3 AND LARGE SCALE PLANS ON SHEET P1B-2.1.

NOTE:
ENTIRE NEW ADDITION SHALL BE FULLY FIRE SPRINKLED TO MEET MFPA 13 CODE REQUIREMENTS. PROVIDE TYCO RAVEN TYPE SPRINKLER HEADS THROUGHOUT ENTIRE BUILDING.;

PLAN NOTES:

27. PROVIDE AND INSTALL ANTI-LIGATURE FLOOR DRAIN IN FLOOR AS SHOWN. ROUGH-IN AND CONNECT 2" WASTE LINE WITH DEEP SEAL P-TRAP. REFER TO SHEET P1B-1.0 FOR WASTE AND VENT PIPING BELOW FLOOR.
28. RUN 1/4" AIR LINE FROM EACH AIRLOCK 9500 DOOR LOCKS INSIDE CONDUIT TO CONNECT TO MANIFOLD JUNCTION BOXES. CONTRACTOR TO VERIFY NUMBER OF MANIFOLDS REQUIRED TO SERVICE DOORS AND LOCATE MANIFOLDS IN SECURE AREAS. FIELD VERIFY AND COORDINATE WITH OTHER TRADES TO AVOID CONFLICT.

PROFESSIONAL ENGINEER REGISTERED P-18184 Feb 27, 2025 STATE OF IDAHO DAVID L. HANSEN

Engineered Systems Associates
1355 EAST CENTER
POCATELLO, IDAHO 83201
PHONE: (208) 233-0501
FAX: (208) 233-0529
EMAIL: esa@engsystems.com
ESA JOB NUMBER: 24048

02.28.25

DATE

AN ADDITION FOR:
TWIN FALLS COUNTY JAIL
2515 Wright Ave, Twin Falls, ID 83301
PHASE 1 PART B - PLUMBING FLOOR PLAN - PART A

Laughlin Ricks Architecture
architecture/planning
134 3RD AVE. E. * Twin Falls, Idaho 83301
(208) 736-8050 Fax: (208) 733-0950

DATE: 02/28/2025

M JENSEN Drawn — D HANSEN Checked

P1B-1.1

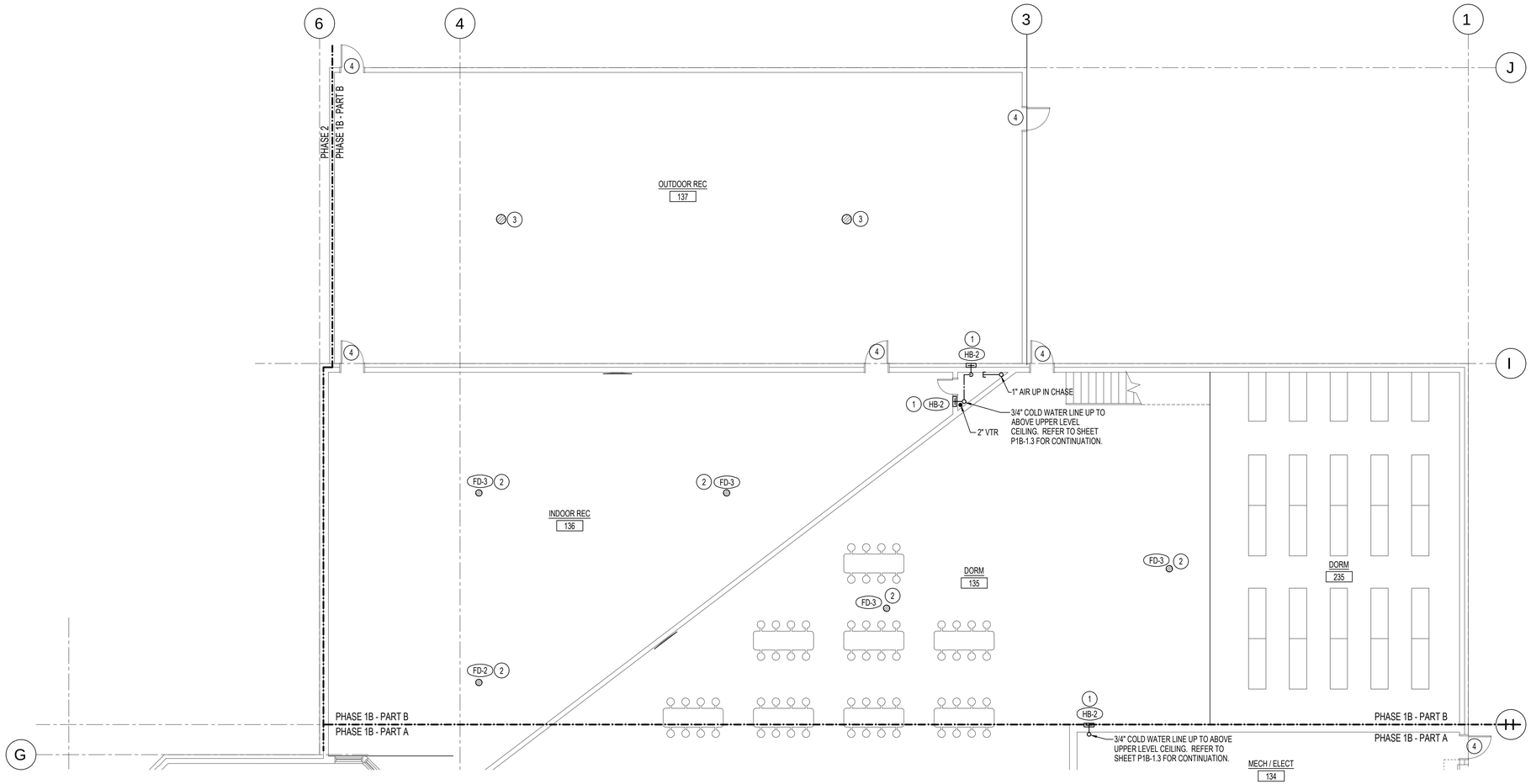

PHASE 1 PART B - MECHANICAL FLOOR PLAN - PART B

SCALE: 1/8" = 1'-0"

North

PLAN NOTES:

1. PROVIDE AND INSTALL FULLY RECESSED HOSE BIBB WITH LOCKABLE COVER IN EXTERIOR OR INTERIOR WALL AS SHOWN. PROVIDE VALVE LENGTH TO SUIT WALL THICKNESS AND TO PLACE THE SHUT-OFF MECHANISM INSIDE THE PLUMBING CHASE. COORDINATE HOSE BIBB PIPING WITH OTHER WASTE, WASTE AND VENT PIPING AND WITH DUCTWORK AS SHOWN ON MECHANICAL DRAWINGS. REFER TO DETAIL G/P1B-3.3 FOR TYPICAL INSTALLATION.
2. PROVIDE AND INSTALL ANTI-LIGATURE FLOOR DRAIN IN FLOOR AS SHOWN. ROUGH-IN AND CONNECT 2" WASTE LINE WITH DEEP SEAL P-TRAP. REFER TO SHEET P1B-1.0 FOR WASTE AND VENT PIPING BELOW FLOOR.
3. DRAINS IN OUTDOOR RECREATION AREA ARE PROVIDE AND INSTALLED BY SITE CONTRACTOR. WASTE PIPING IS ALSO BY SITE CONTRACTOR.
4. RUN 1/4" AIR LINE FROM EACH AIRLOCK 9500 DOOR LOCKS INSIDE CONDUIT TO CONNECT TO MANIFOLD JUNCTION BOXES. CONTRACTOR TO VERIFY NUMBER OF MANIFOLDS REQUIRED TO SERVICE DOORS AND LOCATE MANIFOLDS IN SECURE AREAS. FIELD VERIFY AND COORDINATE WITH OTHER TRADES TO AVOID CONFLICT.

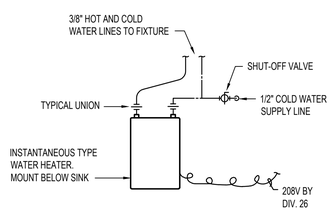

A | INSTANTANEOUS WATER HEATER | NO SCALE

PROFESSIONAL ENGINEER REGISTERED P-18184 Feb 27, 2025 STATE OF IDAHO DAVID L. HANSEN

Engineered Systems Associates
1355 EAST CENTER
POCATELLO, IDAHO 83201
PHONE: (208) 233-0501
FAX: (208) 233-0529
EMAIL: eso@engsystems.com
ESA JOB NUMBER: 24048

02.28.25

DATE	

AN ADDITION FOR:
TWIN FALLS COUNTY JAIL
2515 Wright Ave, Twin Falls, ID 83301
PHASE 1 PART B - MECHANICAL FLOOR PLAN - PART B

Laughlin Ricks Architecture
architecture/planning
134 3RD AVE. E. * Twin Falls, Idaho 83301
(208) 736-8050 Fax: (208) 733-0950

DATE: 02/28/2025
M JENSEN Drawn | D HANSEN Checked

P1B-1.2

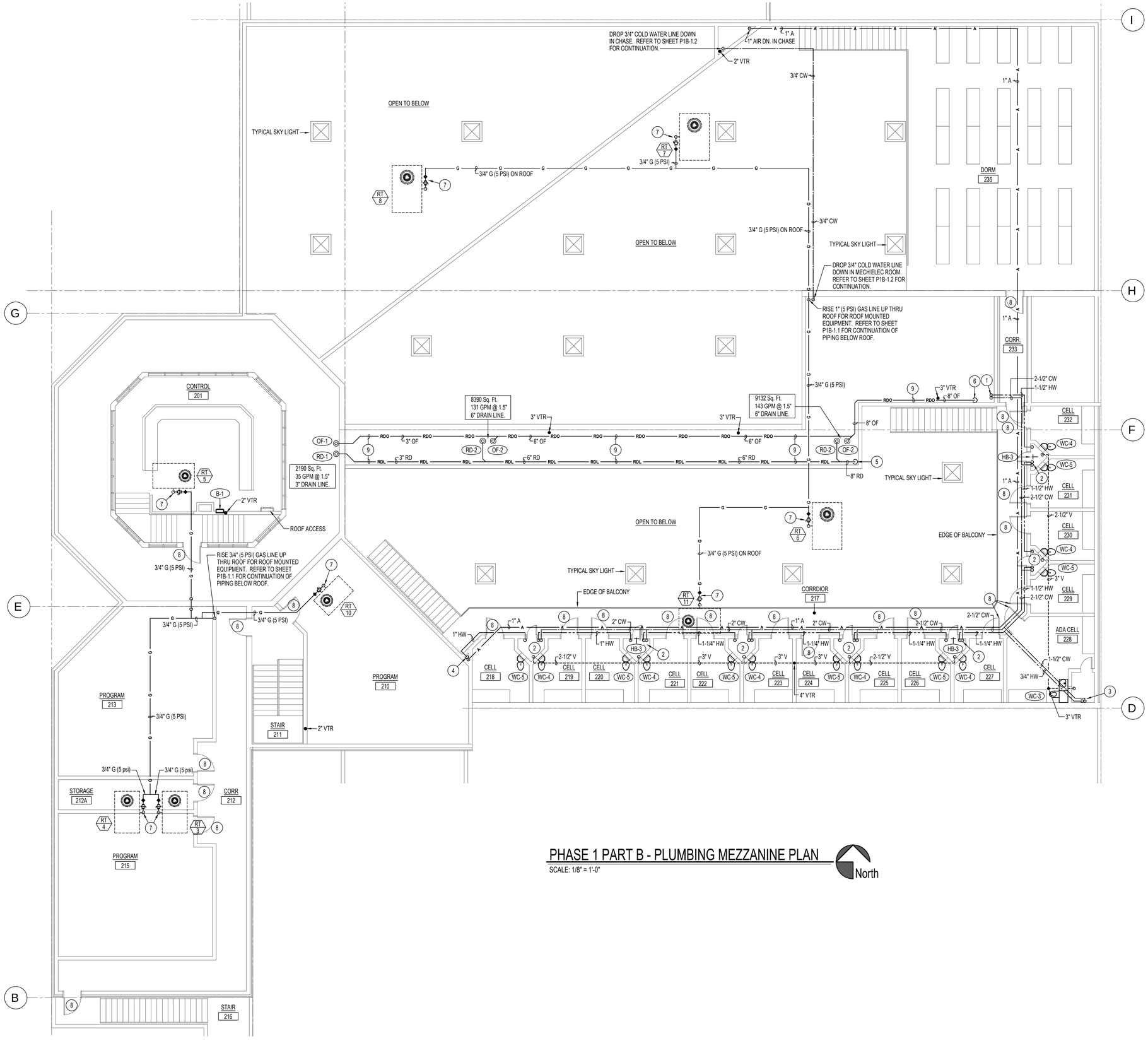

PHASE 1 PART B - PLUMBING MEZZANINE PLAN

SCALE: 1/8" = 1'-0"

North

PLAN NOTES:

1. 2-1/2" COLD WATER AND 1-1/2" HOT WATER LINES UP FROM BELOW. REFER TO SHEET P1B-1.1 FOR PIPING AND EQUIPMENT IN ROOM BELOW. SECURE PIPING TO WALLS. RISE UP ABOVE UPPER LEVEL CEILING AND RUN TO CELLS AS SHOWN.
2. EXTEND 2" COLD WATER AND 3/4" HOT WATER LINE INTO UTILITY CHASE BETWEEN CELLS. DROP PIPING DOWN TO CONNECT TO UPPER LEVEL FIXTURES. REFER TO LARGE SCALE PLAN ON SHEET P1B-2.1 FOR TYPICAL PIPING CONNECTIONS TO CELL FIXTURES. EXTEND 1-1/2" COLD WATER LINE AND 3/4" HOT WATER LINE DOWN THRU FLOOR AND CONNECT TO FIXTURES ON MAIN LEVEL. REFER TO SHEET P1B-1.1 FOR PIPING ON MAIN LEVEL.
3. EXTEND 1-1/2" COLD WATER AND 3/4" HOT WATER LINE INTO UTILITY CHASE AS SHOWN. DROP PIPING DOWN TO CONNECT TO UPPER LEVEL FIXTURES. REFER TO LARGE SCALE PLAN ON SHEET P1B-2.1 FOR TYPICAL PIPING CONNECTIONS TO CELL FIXTURES. EXTEND 1" COLD WATER LINE AND 3/4" HOT WATER LINE DOWN THRU FLOOR AND CONNECT TO FIXTURES ON MAIN LEVEL. REFER TO SHEET P1B-1.1 FOR PIPING ON MAIN LEVEL.
4. DROP1" COMPRESSED AIR AND 1" HOT WATER LINES DOWN IN CHASE TO CEILING SPACE OF MAIN LEVEL. REFER TO SHEET P1B-1.1 FOR CONTINUATION OF PIPING.
5. DROP 8" ROOF DRAIN LINE DOWN IN CORNER. EXTEND THRU MAIN LEVEL FLOOR. REFER TO SHEET P1B-1.0 FOR CONTINUATION OF PIPING BELOW FLOOR.
6. DROP 8" OVERFLOW LINE DOWN TO PASS BELOW MEZZANINE WALKWAY. KEEP PIPING AS HIGH AS POSSIBLE BELOW WALKWAY. SECURE PIPING TO WALL. REFER TO SHEET P1B-1.1 AND TO DETAILS C & D ON SHEET P1B-2.2 FOR OVERFLOW PIPING DOWN TO WALL FLANGE.
7. HVAC EQUIPMENT BY MECHANICAL OR KITCHEN EQUIPMENT CONTRACTOR. PLUMBING CONTRACTOR TO ROUGH-IN AND CONNECT 5 PSI GAS LINE TO UNIT. PROVIDE PRESSURE REGULATOR (5 PSI TO 0.5 PSI), SHUT-OFF VALVE AND FLEXIBLE HOSE. REFER TO DETAIL J/P1B-3.2 FOR TYPICAL GAS LINE CONNECTION.
8. RUN 1/4" AIR LINE FROM EACH AIRLOCK 9500 DOOR LOCKS INSIDE CONDUIT TO CONNECT TO MANIFOLD JUNCTION BOXES. CONTRACTOR TO VERIFY NUMBER OF MANIFOLDS REQUIRED TO SERVICE DOORS AND LOCATE MANIFOLDS IN SECURE AREAS. FIELD VERIFY AND COORDINATE WITH OTHER TRADES TO AVOID CONFLICT.
9. RUN ROOF DRAIN AND OVERFLOW DRAIN LINES AS HIGH AS POSSIBLE THRU MECHANICAL CORRIDOR. SUPPORT PIPING FROM ROOF STRUCTURE. GRADE PIPING AT 1/4" SLOPE PER FOOT.

02.28.25

DATE

AN ADDITION FOR:
TWIN FALLS COUNTY JAIL
2515 Wright Ave, Twin Falls, ID 83301
PHASE 1 PART B - PLUMBING MEZZANINE PLAN

Laughlin Ricks Architecture
architecture/planning
134 3RD AVE. E. * Twin Falls, Idaho 83301
(208) 736-8050 Fax: (208) 733-0950

PROFESSIONAL ENGINEER REGISTERED
P-18184
Feb 27, 2025
STATE OF IDAHO
DAVID L. HANSEN

Engineered Systems Associates
1355 EAST CENTER
POCATELLO, IDAHO 83201
PHONE: (208) 233-0501
FAX: (208) 233-0529
EMAIL: esa@engsystems.com
ESA JOB NUMBER: 24048

DATE: 02/28/2025

M JENSEN Drawn | D HANSEN Checked

P1B-1.3

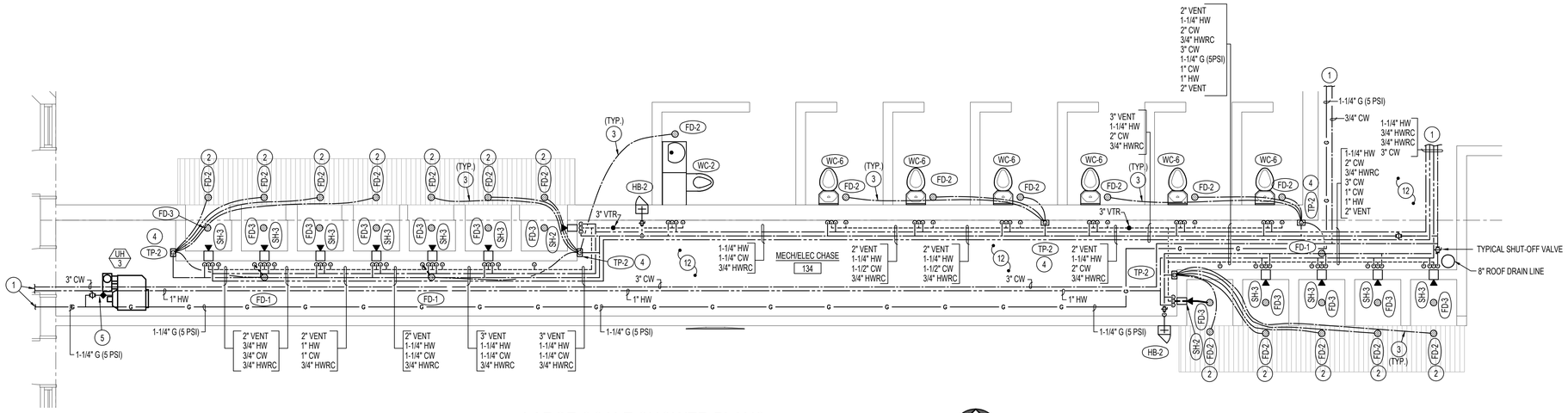

LARGE SCALE SHOWER PLANS

SCALE: 1/4" = 1'-0"

North

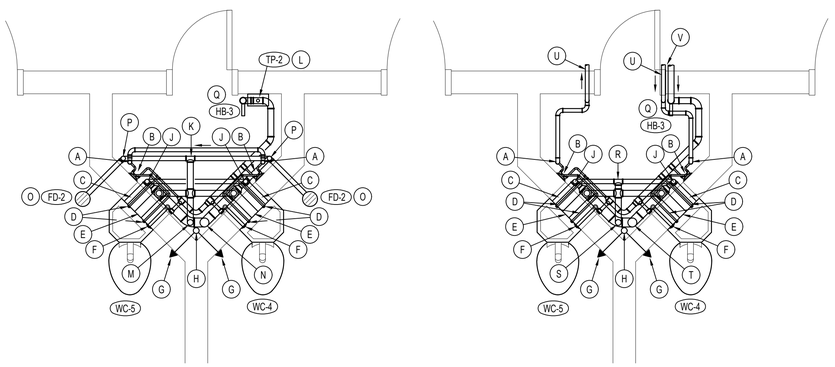

TYPICAL LARGE SCALE CELL PLANS

SCALE: 1/2" = 1'-0"

North

A	HOT WATER LINE. DROP FROM UPPER LEVEL DOWN TO MAIN LEVEL AND BACK UP TO UPPER LEVEL AGAIN	N	DROP 3" WASTE LINE DOWN THRU UPPER LEVEL FLOOR
B	TEMPERED WATER MIXING VALVE FOR COMBY UNIT. MOUNT ON WALL NEAR FIXTURE	O	LIGATURE FLOOR DRAIN ON MAIN LEVEL ONLY.
C	1-1/2" WASTE LINE FROM LAVATORY ABOVE FLOOR.	P	2" VENT FROM FLOOR DRAIN. RISE TO CEILING BEFORE CONNECTING TO OTHER PIPING.
D	1/2" HOT AND COLD WATER LINES TO LAVATORY.	Q	INTERNAL HOSE BIBB WHERE SHOWN ON PLUMBING FLOOR PLANS. CONNECT WITH 3/4" COLD WATER LINE AT 15" AFF.
E	3" WASTE LINE FROM TOILET ABOVE FLOOR.	R	CONNECT (2) 1-1/2" LAVATORY VENTS WITH (2) 2" TOILET VENTS ABOVE UPPER LEVEL CEILING.
F	1" COLD WATER LINE FOR TOILET.	S	RISE 2" VENT FROM MAIN LEVEL AND CONNECT WITH 2" VENT FROM UPPER LEVEL. SEE SHEET P1B-P1.3 FOR CONT.
G	FIRE SPRINKLER HEAR NEAR CEILING	T	DROP 3" WASTE LINE DOWN THRU MEZZANINE FLOOR.
H	FIRE SPRINKLER PIPING FROM ABOVE CEILING DOWN IN CHASE TO MAIN LEVEL. (SEE FIRE SPRINKLER DRAWINGS.)	U	HOT WATER LINE ABOVE MEZZANINE LEVEL CEILING. SEE SHEET P1B-1.3 FOR CONTINUATION ON TO NEXT CHASE.
J	1-1/2" VENT LINE UP FROM LAVATORY. RISE TO CEILING BEFORE CONNECTING TO OTHER PIPING.	V	2" COLD WATER LINE ABOVE MEZZANINE LEVEL CEILING. SEE SHEET P1B-1.3 FOR CONTINUATION TO NEAT CHASE.
K	CONNECT (2) 1-1/2" LAVATORY VENTS AND (2) 2" FLOOR DRAIN VENTS WITH (2) 2" TOILET VENTS NEAR CEILING.		
L	TRAP PRIMER ON COLD WATER LINE. RUN 1/2" COLD WATER LINE BELOW MAIN LEVEL FLOOR TO (2) FLOOR DRAINS.		
M	RISE 2" VENT UP THRU UPPER LEVEL FOOR.		

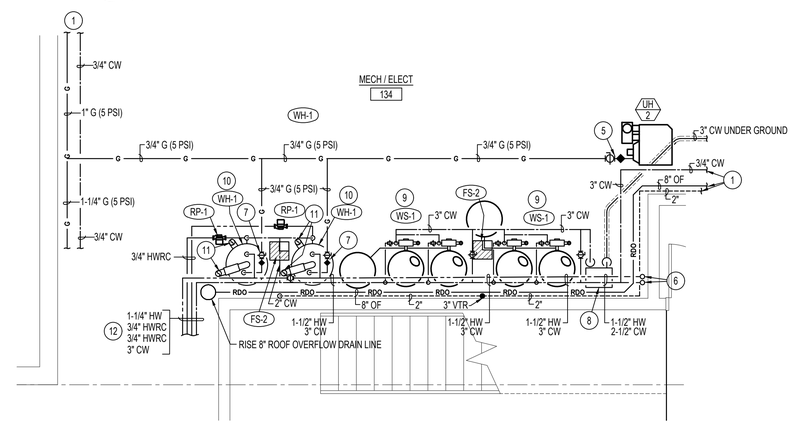

LARGE SCALE MECH / ELECT 134 PLUMBING PLAN

SCALE: 1/4" = 1'-0"

North

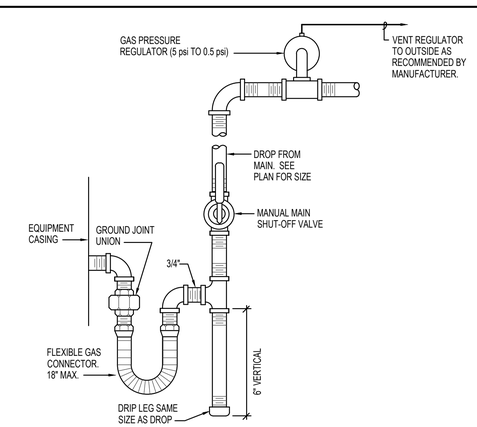

A GAS LINE CONNECTION DETAIL

NO SCALE

PLAN NOTES:

1. SEE SHEET P1B-1.1 FOR CONTINUATION OF PIPING.
2. FLOOR DRAIN FD-2 TO BE LOCATED UNDER DRYING MAT.
3. RUN 1/2" CW LINE FROM TRAP PRIMER ASSEMBLY TO TRAP PRIMER CONNECTION ON FLOOR DRAIN FD-2. REFER TO DETAIL J ON SHEET P1B-3.1.
4. MULTIPORT TRAP PRIMER ASSEMBLY. SEE DETAIL J ON SHEET P1B-3.1.
5. DROP 3/4" (5 PSI) GAS LINE DOWN TO SERVE UNIT HEATER. INSTALL 5 PSI TO 0.5 PSI GAS REGULATOR ON 3/4" GAS LINE AND VENT TO THE EXTERIOR. SIZE REGULATOR FOR ACTUAL BTU LOAD OF UNIT HEATER PROVIDED. CONNECT 3/4" (0.5 PSI) GAS LINE TO UNIT HEATER COMPLETE WITH SHUT-OFF VALVE, DIRT LEG AND FLEXIBLE CONNECTION. SEE DETAIL A ON THIS SHEET.
6. RISE 2-1/2" COLD WATER AND 1-1/2" HOT WATER LINES UP IN MECHANICAL ROOM 134 TO ABOVE CEILING OF UPPER LEVEL. REFER TO SHEET P1B-1.3 FOR CONTINUATION OF PIPING ON UPPER LEVEL.
7. DROP 3/4" (5 PSI) GAS LINE DOWN TO SERVE WATER HEATER. INSTALL 5 PSI TO 0.5 PSI GAS REGULATOR ON 3/4" GAS LINE AND VENT TO THE EXTERIOR. SIZE REGULATOR FOR ACTUAL BTU LOAD OF WATER HEATER PROVIDED. CONNECT 3/4" (0.5 PSI) GAS LINE TO UNIT HEATER COMPLETE WITH SHUT-OFF VALVE, DIRT LEG AND FLEXIBLE CONNECTION. SEE DETAIL A ON THIS SHEET.
8. RISE 3" COLD WATER SERVICE LINE UP THRU FLOOR AND CONNECT TO MAIN SHUT-OFF VALVE AND PRESSURE REDUCING STATION. REFER TO DETAIL K/P1B-3.1 FOR TYPICAL INSTALLATION AND PIPING CONNECTIONS.
9. INSTALL DUPLEX WATER SOFTENER AS INDICATED IN PLUMBING FIXTURE SCHEDULE. CONNECT TO 3" COLD WATER LINE AND PROVIDE BY-PASS VALVE. REFER TO DETAIL N/P1B-1.2 FOR TYPICAL INSTALLATION OF WATER SOFTENER. (ALL WATER IN BUILDING INCLUDING FUTURE PHASES TO BE CONNECT TO SOFT WATER SYSTEM.)
10. INSTALL GAS FIRED WATER HEATER AS INDICATED IN PLUMBING FIXTURE SCHEDULE. CONNECT TO 1-1/2" HOT AS COLD (SOFT) WATER LINES. REFER TO DETAIL H/P1B-3.2 FOR TYPICAL PIPE CONNECTIONS AND FOR EXPANSION TANK AND MIXING VALVE TO BE SUPPLIED WITH EQUIPMENT.
11. RISE (2) 4" FLUES UP THRU ROOF TO VERTICAL VENT TERMINATION ASSEMBLY. SEAL ROOF PENETRATION WEATHERTIGHT. SEE MANUFACTURER'S LITERATURE FOR MORE INFORMATION.
12. INSTALL ALL WATER PIPING LOCATED IN MECH / ELEC CHASE AT 8'-0" A.F.F ANCHORED TO WALL. PIPING SHOWN AWAY FROM WALL FOR CLARITY ONLY.

02.28.25

DATE

AN ADDITION FOR:
TWIN FALLS COUNTY JAIL
2515 Wright Ave, Twin Falls, ID 83301
PHASE 1 PART B - LARGE SCALE PLUMBING PLANS

Laughlin Ricks Architecture
architecture/planning
134 3RD AVE. E. * Twin Falls, Idaho 83301
(208) 736-8050 Fax: (208) 733-0950

PROFESSIONAL ENGINEER REGISTERED
P-18184
Feb 27, 2025
STATE OF IDAHO
DAVID L. HANSEN

Engineered Systems Associates
1355 EAST CENTER
POCATELLO, IDAHO 83201
PHONE: (208) 233-0501
FAX: (208) 233-0529
EMAIL: esa@engsystems.com
ESA JOB NUMBER: 24048

DATE: 02/28/2025

M JENSEN Drawn | D HANSEN Checked

P1B-2.1

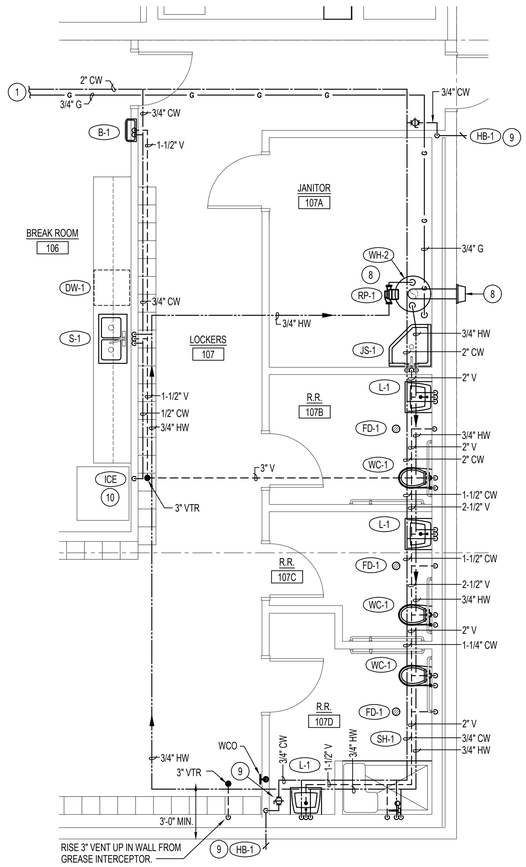

LARGE SCALE LOCKER ROOM PLAN

SCALE: 1/4" = 1'-0"

North

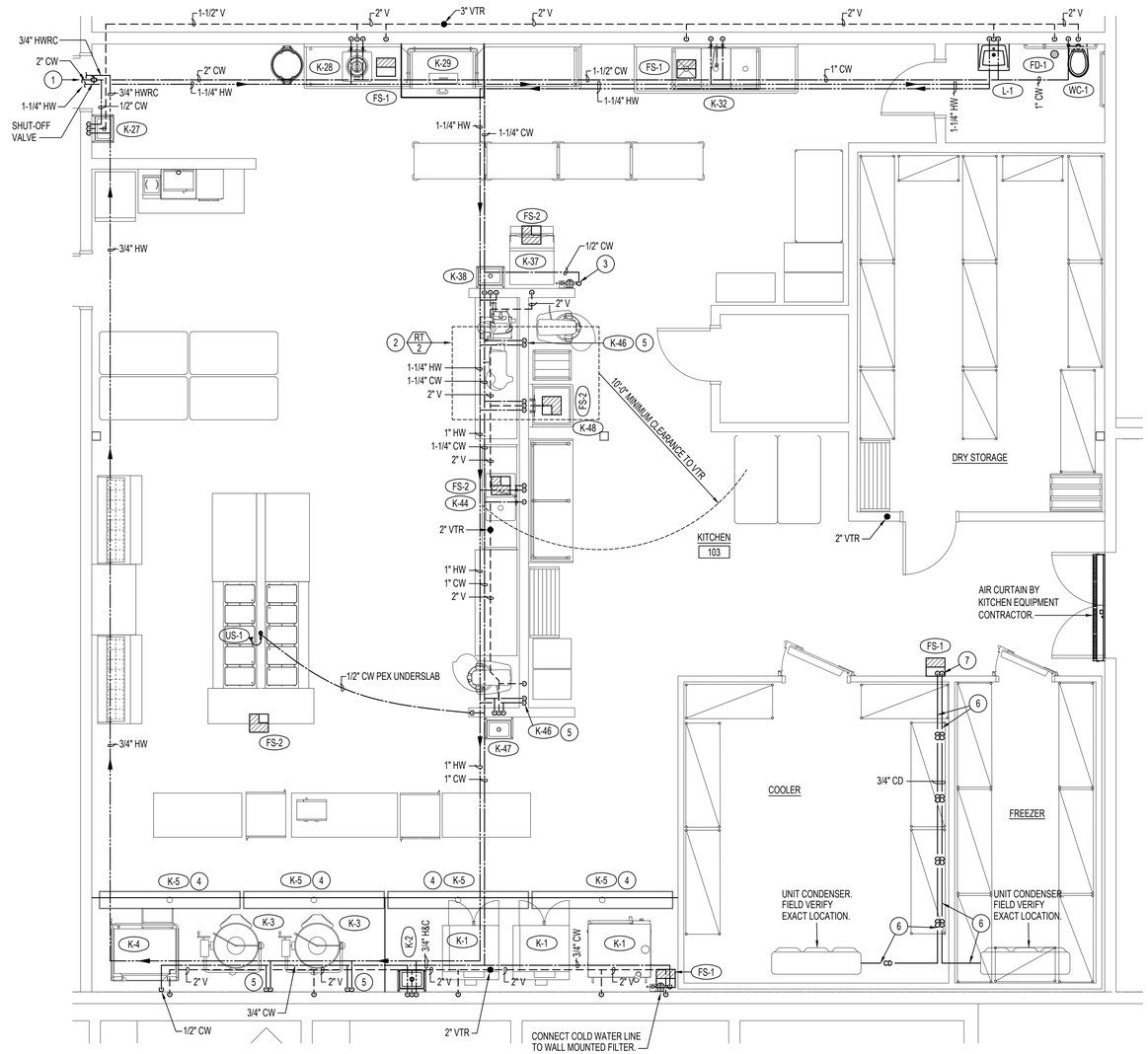

PHASE 1 PART B - LARGE SCALE KITCHEN PLAN

SCALE: 1/4" = 1'-0"

North

PLAN NOTES:

1. REFER TO SHEET P1B-1.1 FOR CONTINUATION OF PIPING.
2. PACKAGED ROOF TOP UNIT BY MECHANICAL CONTRACTOR. REFER TO SHEET P1B-1.1 FOR GAS LINE CONNECTION. ALL VENTS THRU ROOF ARE TO BE A MINIMUM OF 10'-0" AWAY FROM AIR INTAKE OF ROOF TOP UNIT. COORDINATE PIPING WITH DUCTS IN CEILING SPACE. REFER TO MECHANICAL DRAWINGS.
3. CONNECT COLD WATER LINE TO WALL MOUNTED FILTER. PROVIDE BACK-FLOW PREVENTION DEVICE IN WATER LINE BEHIND (OR BELOW) ICE MAKER BEFORE CONNECTION. SEE DETAIL A/P1B-2.2.
4. FLOOR TROUGH PROVIDED AND INSTALLED BY KITCHEN EQUIPMENT CONTRACTOR. ROUGH-IN AND CONNECT 4" WASTE LINE WITH DEEP SEAL P-TRAP TO EACH (OF 4) TROUGHS. REFER TO SHEET P1B-1.0 FOR PIPING CONNECTIONS TO GREASE INTERCEPTOR.
5. KETTLE AND/OR MIXER FILL FAUCET FURNISHED AND INSTALLED BY KITCHEN EQUIPMENT CONTRACTOR. ROUGH-IN AND CONNECT HOT AND COLD WATER LINES AS REQUIRED. COORDINATE ACTUAL LOCATION OF FAUCET.
6. CONNECT 3/4" COPPER DRAIN LINE TO COOLER AND/OR FREEZER CONDENSER. RUN THRU COOLER AS SHOWN. PROVIDE HEAT TRACE AND 3/4" RUBBER PIPE INSULATION ON LINES THRU UNITS.
7. DROP DRAIN LINES DOWN EXTERIOR OF FREEZER / COOLER UNITS TO FLOOR SINK. TERMINATE IN FLOOR SINK WITH REQUIRED 1" AIR GAP.
8. GAS FIRED WATER HEATER WITH DIRECT VENT THRU WALL. REFER TO DETAIL L/P1B-3.2 FOR TYPICAL INSTALLATION OF WATER HEATER, PIPING, AND VENT IN WALL. KEEP VENT THRU WALL AT LEAST 10'-0" ABOVE GRADE LEVEL.
9. INSTALL EXTERIOR HOSE BIBB AS CALLED OUT IN SCHEDULE. REFER TO DETAIL B/P1B-3.1 FOR TYPICAL INSTALLATION. PROVIDE SHUT-OFF VALVE ABOVE CEILING. PROVIDE ACCESS DOOR IN CEILING AS REQUIRED. LABEL VALVE AS "HOSE BIBB SHUT-OFF".
10. DROP 1/2" COLD WATER LINE DOWN IN WALL TO UTILITY BOX AND SHUT-OFF VALVE. SHUT-OFF VALVE TO HAVE INTEGRAL WATER HAMMER ARRESTOR. REFER TO DETAIL B/P1B-2.2 FOR TYPICAL INSTALLATION.
11. FIRE SERVICE LINE TO BUILDING BY FIRE SPRINKLER CONTRACTOR. COORDINATE WITH OTHER PIPING IN THIS AREA. REFER TO UTILITIES SITE PLAN FOR CONTINUATION OF FIRE SERVICE LINE.
12. INSTALL SIAMESE FIRE DEPARTMENT CONNECTION AND ELECTRIC ALARM GONG ON WALL. PRIOR APPROVAL OF LOCATION MUST BE OBTAINED FROM LOCAL FIRE MARSHALL BEFORE INSTALLATION.
13. INSTALL FIRE RISER AND ALARM VALVE IN THIS LOCATION. FIRE SPRINKLER SYSTEM TO BE DESIGNED AND SIZED BY FIRE SPRINKLER CONTRACTOR. PROVIDE LARGE ENOUGH RISER TO ACCOMMODATE FUTURE PHASES 2, 3, 4, & 5. REFER TO DETAIL L/P1B-3.1 FOR TYPICAL RISER AND ALARM PIPING CONNECTIONS.
14. 3" DOMESTIC WATER SERVICE LINE TO BUILDING. COORDINATE WITH OTHER PIPING IN THIS AREA. REFER TO UTILITIES SITE PLAN FOR CONTINUATION OF WATER PIPING.

02.28.25

DATE

AN ADDITION FOR:
TWIN FALLS COUNTY JAIL
2515 Wright Ave, Twin Falls, ID 83301
PHASE 1 PART B - LARGE SCALE KITCHEN PLAN

Laughlin Ricks Architecture
architecture/planning
134 3RD AVE. E. * Twin Falls, Idaho 83301
(208) 736-8050 Fax: (208) 733-0950

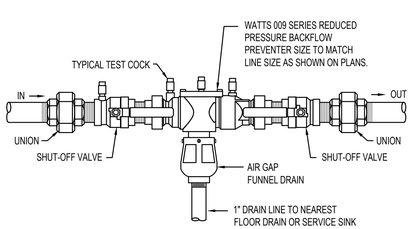

A | BACK-FLOW PREVENTER DETAIL | NO SCALE

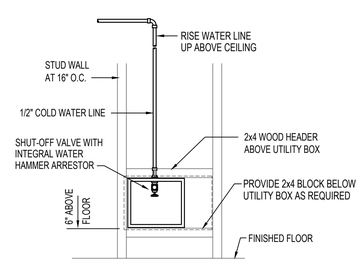

B | UTILITY BOX DETAIL | NO SCALE

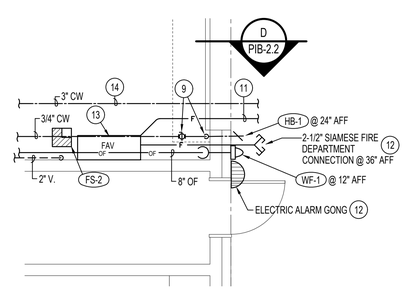

C | SERVICE UTILITIES FLOOR PLAN | NO SCALE

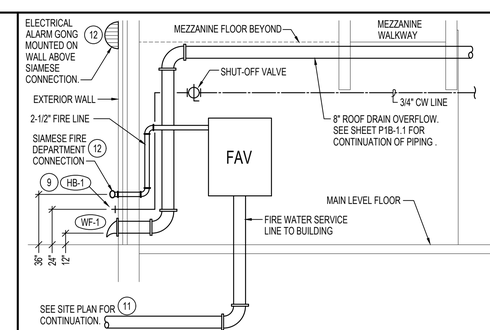

D | SERVICE UTILITIES ELEVATION | NO SCALE

PROFESSIONAL ENGINEER REGISTERED 18184 Feb 27, 2025 STATE OF IDAHO DAVID L. HANSEN

Engineered Systems Associates
1355 EAST CENTER
POCATELLO, IDAHO 83201
PHONE: (208) 233-0501
FAX: (208) 233-0529
EMAIL: esa@engsystems.com
ESA JOB NUMBER: 24048

DATE: 02/28/2025
M JENSEN Drawn
D HANSEN Checked

P1B-2.2

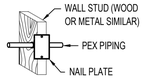

WALL INSTALLATION

VERTICAL TUBING TO BE SUPPORTED EVERY 8'-0"

WHEN PENETRATING METAL STUDS, UTILIZE A BUSHING DESIGNED FOR PLASTIC TUBING.

SUPPORTS SHALL BE INSTALLED AT CHANGES IN DIRECTION TO RELIEVE STRESS AS SHOWN.

PIPE SUPPORTS:
PLASTIC HANGERS AND STRAPS ARE RECOMMENDED, BUT METAL SUPPORTS WHICH ARE DESIGNED FOR USE WITH PLASTIC TUBING CAN BE USED.

DO NOT USE SUPPORTS THAT PINCH OR CUT THE TUBING. SUPPORT SHOULD ALLOW FREE TUBING MOVEMENT.

INSPECT ALL SUPPORTS PRIOR TO INSTALLATION TO ENSURE THAT SHARP EDGES DO NOT EXIST THAT CAN DAMAGE THE TUBING.

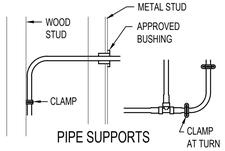

PIPE SUPPORTS

DO NOT USE IN ANY APPLICATION WHERE TUBING WILL BE EXPOSED TO DIRECT SUNLIGHT.

A PEX PIPE INSTALLATION DETAILS — NO SCALE

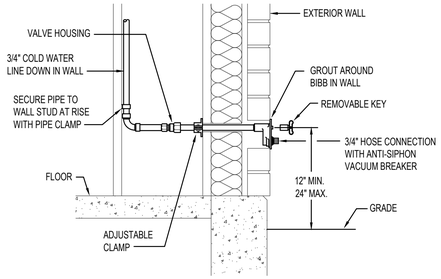

B EXTERIOR HOSE BIBB DETAIL — NO SCALE

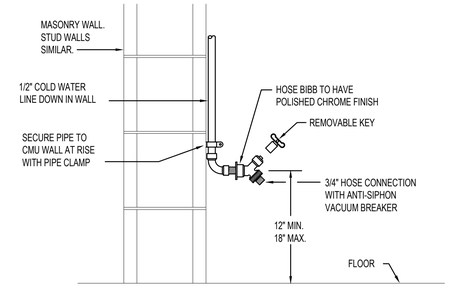

C INTERIOR HOSE BIBB DETAIL — NO SCALE

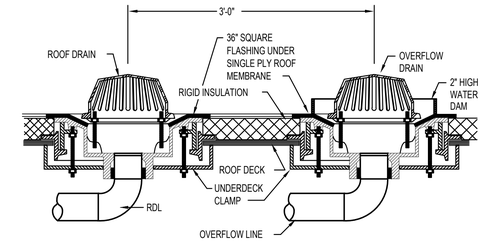

D ROOF DRAIN INSTALLATION DETAIL — NO SCALE

THIS TYPE (COLD EXPANSION) OF FITTING REQUIRES THAT THE PEX PIPING, WITH REINFORCING PEX RING PLACED OVER THE END OF THE PIPE. THE PIPE IS EXPANDED BEFORE THE FITTING IS INSERTED INTO THE PIPE END. THE EXPANDED PIPE END IS ALLOWED TO RETRACT ONTO THE FITTING TO FORM THE SEAL. THE MEMORY OF THE PIPE ALLOWS IT TO TIGHTEN OVER THE FITTING. AN EXPANDER TOOL IS REQUIRED TO EXPAND THE PIPE AND THE PEX RING TOGETHER.

ALL JOINTS (TEES. ELBOWS, COUPLINGS, ETC.) ARE JOINTED SIMILARLY.

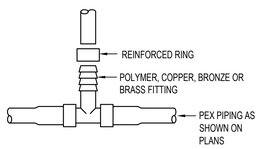

NOTE:
STAINLESS STEEL CAMP BANDS ARE ALSO PERMITTED FOR REINFORCING RING.

E PEX PIPE FITTING DETAILS — NO SCALE

KEEP TUBING A MINIMUM OF 12" VERTICALLY OR 6" HORIZONTALLY FROM SOURCES OF HIGH HEAT SUCH AS LIGHT FIXTURES, FLUES OR HEATING EQUIPMENT.

NOTE:
USE ONLY CONTINUOUS LENGTH TUBING (NO FITTINGS) WHEN INSTALLING PEX UNDER OR WITHIN A SLAB. PROTECT PEX TUBING WITH NONMETALLIC SLEEVES WHERE IT PENETRATES A SLAB OR FOUNDATION WALL.

MIN. CLEARANCES

TUBING SIZE	MIN. RADIUS BENDING
3/8"	4"
1/2"	5"
3/4"	7"
1"	9"

DO NOT CRUSH OR KINK TUBING

DO NOTE DRAG TUBING OVER ROUGH TERRAIN, ROCKS, OR ANY SURFACE THAT CAN CUT, PUNCTURE OR DAMAGE TUBING WALL.

TUBING AND FITTINGS SHALL BE STORED UNDERCOVER FOR CLEANLINESS AND TO AVOID EXPOSURE TO SUNLIGHT. CONSULT MANUFACTURER FOR RECOMMENDED LIMITS TO OUTSIDE STORAGE.

F PEX PIPE HANDLING DETAILS — NO SCALE

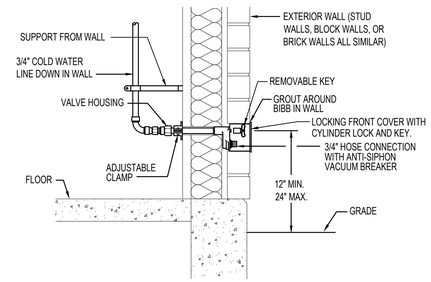

G LOCKING HOSE BIBB DETAIL — NO SCALE

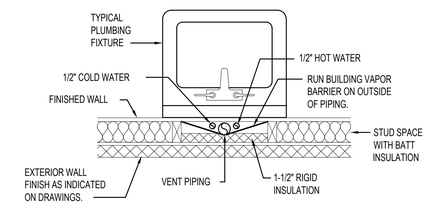

H PIPING IN OUTSIDE WALL DETAIL — NO SCALE

NOTE:
FIRE RISER TO BE DEFERRED SUBMITTAL FROM LICENSED LIFE SAFETY CONTRACTOR.

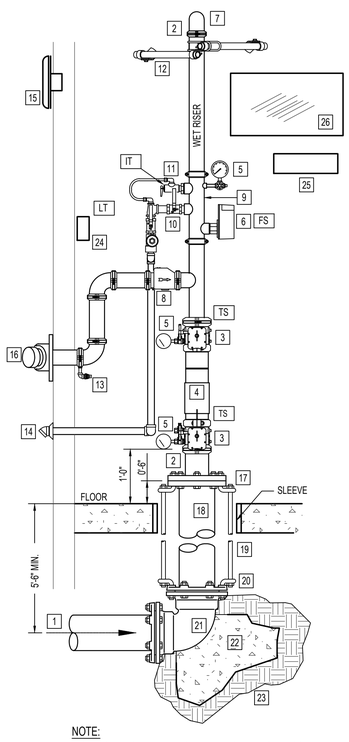

NOTE:
PROVIDE SLEEVES WHERE PIPING PENETRATES BUILDING AT FLOOR AND WALLS. SEAL AROUND PENETRATION WITH FLEXIBLE MASTIC AT FLOOR. PROVIDE 2" ANNULAR SPACE AROUND AND RESTRAIN FLANGE SPIGOT.

WET RISER DETAIL NOTES

1. WATER SUPPLY FROM CITY WATER MAIN. USE CLASS 53 DUCTILE IRON WHEN CROSSING UNDER BLDG FOUNDATION.
2. USE FLEXIBLE GROOVED PIPE COUPLING ONLY IF SEISMIC BRACING IS REQUIRED. SEE NOTE #12.
3. GROOVED BUTTERFLY VALVE WITH INTEGRAL SUPERVISORY SWITCH.
4. DOUBLE CHECK BACKFLOW PREVENTER WITH RELATED TRIM AND GAUGES.
5. 3-1/2" DIAMETER WATER GAUGE WITH ¼" TEST AND ISOLATION VALVE.
6. VANE TYPE WATER FLOW SWITCH.
7. SUPPLY TO WET PIPE FIRE SPRINKLER SYSTEM.
8. SWING CHECK VALVE.
9. RISER MANIFOLD - INCLUDES PRESURE GAUGE, FLOW SWITCH, PRESSURE RELIEF VALVE, AND TEST AND MAIN DRAIN DEVICE.
10. INSPECTOR'S TEST & MAIN DRAIN DEVICE "IT" - PIPE TO OUTSIDE.
11. PRESSURE RELIEF VALVE SHALL BE REQUIRED SET AT 175 PSI.- PIPED TO DISCHARGE OUTSIDE.
12. SEISMIC BRACING REQUIRED IN SEISMIC DESIGN CATEGORY C, D, E, F.
13. 1/2" AUTOMATIC BALL DRIP VALVE.
14. PIPE TO DRAIN OUTSIDE.
15. WEATHERPROOF ELECTRIC BELL OR HORN AND STROBE (OUTSIDE).
16. OUT TO FIRE DEPARTMENT CONNECTION WITH GALVANIZED SCH 40 PIPING- PROVIDE BALL DRIP WHEN TRAPPING PIPE. SIZE CONNECTION AS REQUIRED. NOTE: PIPE FDC TO REMOTE LOCATION WHEN REQUIRED BY FIRE MARSHAL.
17. GALVANIZED FLANGE AND SPOOL PIECE
18. CLASS 53 D.I. FLANGED SPIGOT
19. 3/4" A.T.R.
20. 3/4" BENT EYE BOLT
21. MECHANICAL JOINT 90° ELL
22. CONCRETE THRUST BLOCK WITH 5 SQ. FEET BEARING AREA
23. UNDISTURBED EARTH
24. LOW TEMPERATURE SENSOR - MOUNTED ON WALL - THIS SWITCH IS PROVIDED UNDER DIVISION 28 OF THE SPECIFICATIONS.
25. SPARE HEAD CABINET WITH SPARE SPRINKLER HEADS AND WRENCHES.
26. LAMINATED SYSTEM MAP WITH SYSTEM START-UP AND SHUT-DOWN INSTRUCTIONS.

L TYPICAL FIRE RISER AND ALARM VALVE DETAIL — NO SCALE

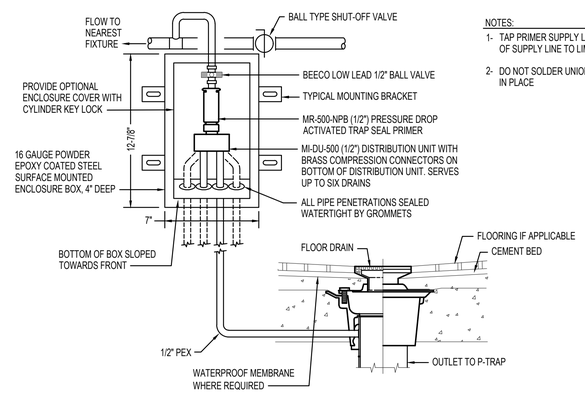

NOTES:

1- TAP PRIMER SUPPLY LINE FROM TOP OF SUPPLY LINE TO LIMIT DEBRIS

2- DO NOT SOLDER UNION WITH PRIMER IN PLACE

J MULTIPLE TRAP PRIMER INSTALLATION DETAIL — NO SCALE

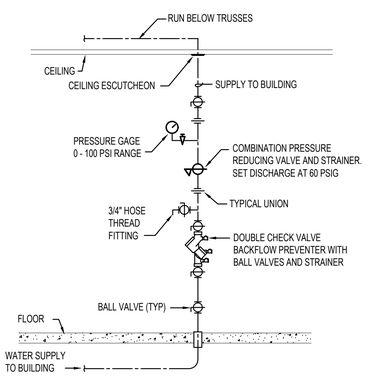

K VERICAL WATER PRESSURE REDUCING STATION — NO SCALE

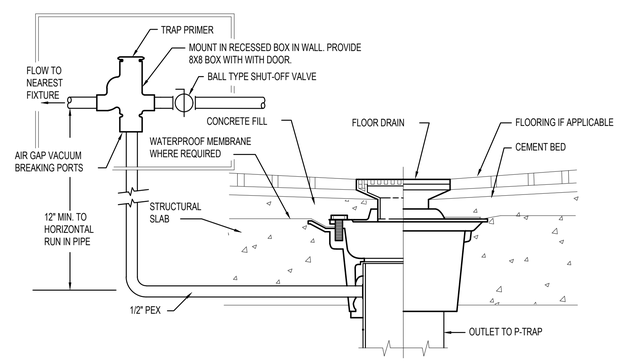

M SINGLE TRAP PRIMER INSTALLATION DETAIL — NO SCALE

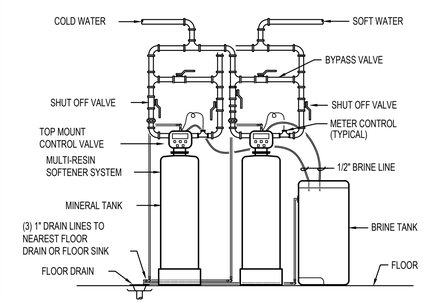

N WATER SOFTENER PIPING DETAIL — NO SCALE

PROFESSIONAL ENGINEER REGISTERED 18184 Feb 27, 2025 STATE OF IDAHO DAVID L. HANSEN

Engineered Systems Associates
1355 EAST CENTER
POCATELLO, IDAHO 83201
PHONE: (208) 233-0501
FAX: (208) 233-0529
EMAIL: esa@engsystems.com
ESA JOB NUMBER: 24048

02.28.25

DATE

AN ADDITION FOR:
TWIN FALLS COUNTY JAIL
2515 Wright Ave, Twin Falls, ID 83301

Laughlin Ricks Architecture
architecture/planning
134 3RD AVE. E. * Twin Falls, Idaho 83301
(208) 736-8050 Fax: (208) 733-0950

DATE: 02/28/2025
M JENSEN Drawn — D HANSEN Checked

P1B-3.1

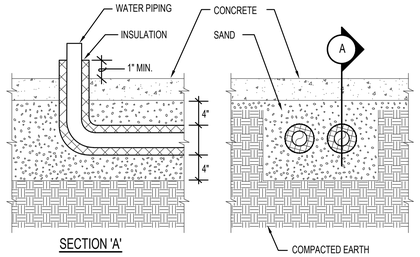

NOTES:

1 - ALL WATER PIPING INSTALLED UNDERFLOOR SHALL BE TYPE "K" COPPER OR PEX

2 - WATER PIPE INSULATION ON UNDERFLOOR PIPING SHALL BE ARMAFLEX 3/4" THICK RUBBER PIPE INSULATION. TAPE INSULATION AT ALL SEAMS. MINIMUM PIPE SIZE UNDERFLOOR SHALL BE 3/4"

3 - SAND FILL AROUND PIPING SHALL BE A MINIMUM OF 4" THICK. MATERIAL SHALL BE HAND TAMPED, RODDED OR LIGHTLY COMPACTED DURING INSTALLATION.

4 - CARE SHOULD BE TAKEN NOT TO DEFORM OR OTHERWISE DAMAGE PIPING OR INSULATION.

A | UNDER SLAB PIPE INSULATION DETAIL — NO SCALE

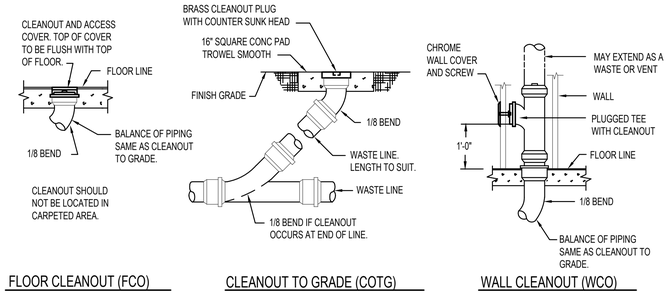

B | CLEAN OUT DETAILS — NO SCALE

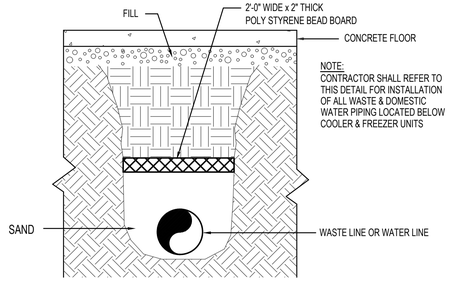

C | INSULATION BOARD BELOW COOLER/FREEZER UNITS — NO SCALE

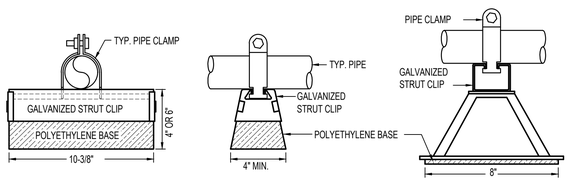

D | SUPPORT DETAILS FOR PIPING ON ROOF — NO SCALE

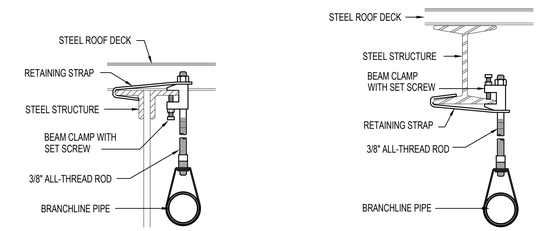

E | FIRE SPRINKLER PIPE HANGER DETAILS — NO SCALE

NOTE:

ALL PIPING SUPPORTS ARE TO BE INSTALLED PRIOR TO FIRE-PROOFING OF JOISTS. NO PIPING SUPPORTS ARE TO BE ATTACHED AFTER FIRE-PROOFING HAS BEEN DONE.

SUPPORT SPACING	
PIPE Ø	MAX. SPAN*
1"	7'-0"
1-1/2"	9'-0"
2"	10'-0"
2-1/2"	11'-0"
3"	12'-0"

* MOUNT PIPE SUPPORTS AT MAXIMUM SPACING FOR THE SMALLEST PIPING INCLUDED IN SUPPORT RACK.

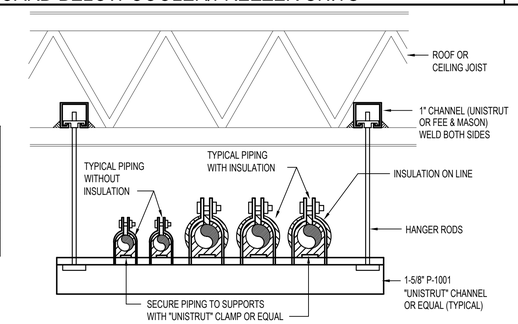

F | PIPE SUPPORT DETAIL — NO SCALE

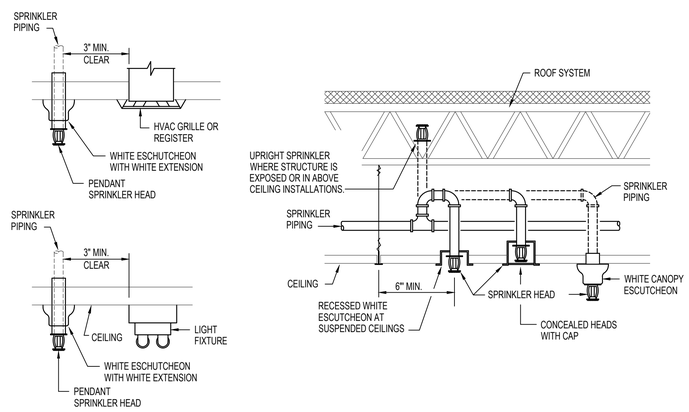

G | SPRINKLER HEAD COORDINATION DETAILS — NO SCALE

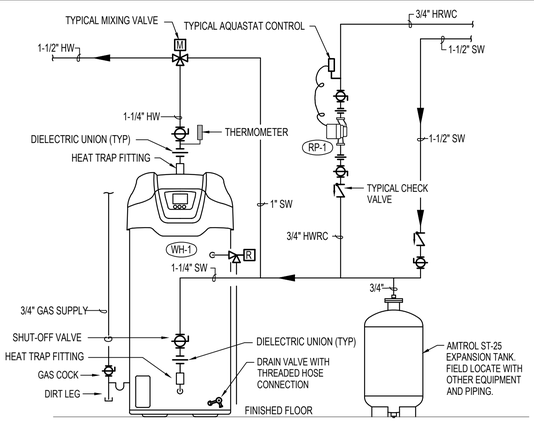

H | WATER HEATER #1 INSTALLATION DETAIL — NO SCALE

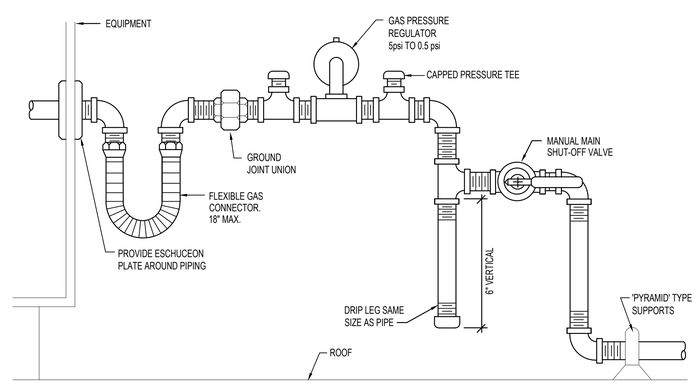

J | GAS LINE CONNECTION DETAIL — NO SCALE

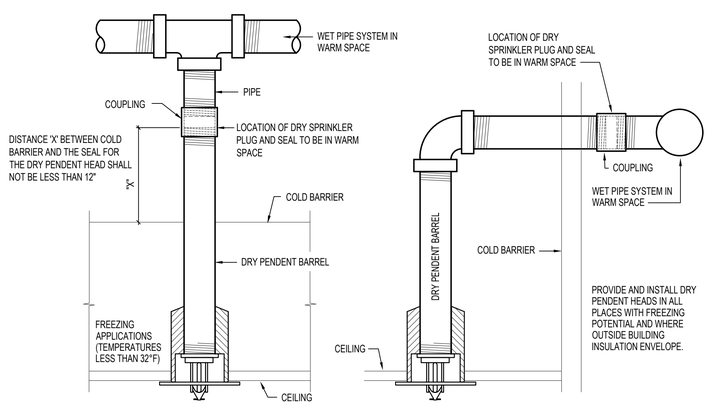

K | DRY PENDANT SPRINKLER HEAD DETAIL — NO SCALE

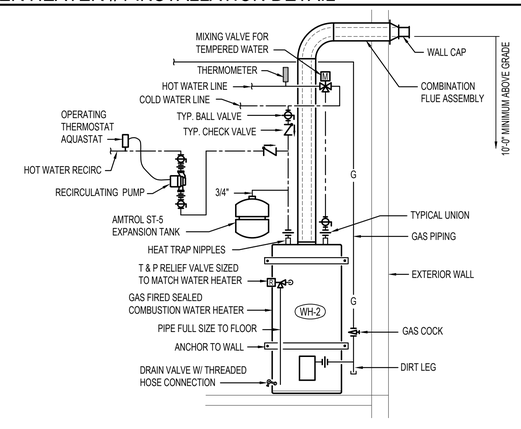

L | WATER HEATER #2 INSTALLATION DETAIL — NO SCALE

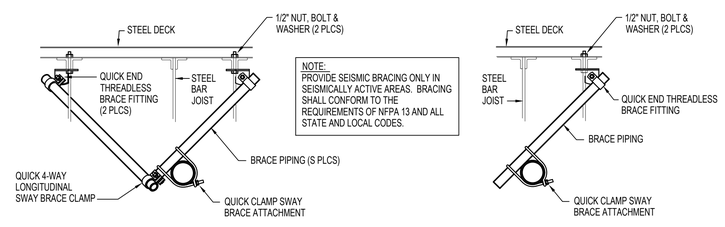

NOTE:
PROVIDE SEISMIC BRACING ONLY IN SEISMICALLY ACTIVE AREAS. BRACING SHALL CONFORM TO THE REQUIREMENTS OF NFPA 13 AND ALL STATE AND LOCAL CODES.

M | SEISMIC BRACING DETAILS — NO SCALE

PROFESSIONAL ENGINEER REGISTERED P-18184 Feb 27, 2025 STATE OF IDAHO DAVID L. HANSEN

Engineered Systems Associates
1355 EAST CENTER
POCATELLO, IDAHO 83201
PHONE: (208) 233-0501
FAX: (208) 233-0529
EMAIL: esa@engsystems.com
ESA JOB NUMBER: 24048

02.28.25

DATE

AN ADDITION FOR:
TWIN FALLS COUNTY JAIL
2515 Wright Ave, Twin Falls, ID 83301
PHASE 1 PART B - PLUMBING FIXTURE SCHEDULE

Laughlin Ricks Architecture
architecture/planning
134 3RD AVE. E. * Twin Falls, Idaho 83301
(208) 736-8050 Fax: (208) 733-0950

DATE: 02/28/2025
M JENSEN Drawn
D HANSEN Checked

P1B-3.2

FIXTURE SCHEDULE

SYM.	DESCRIPTION	HOT	COLD	WASTE	VENT
B-1	WALL MOUNTED BOTTLE FILLER - ELKAY MODEL EZWS8K. MOUNT RECESSED IN WALL WITH MRWS100 MOUNTING FRAME. ROUGH-IN AND CONNECT 1/2" COLD WATER LINE AND 1-1/2" WASTE LINE WITH P-TRAP.	---	1/2"	1-1/2"	1-1/2"
DW-1	UNDER COUNTER DISHWASHER - FURNISHED BY K.E.C. AND INSTALLED BY CONTRACTOR. ROUGH-IN AND CONNECT 3/8" HOT WATER LINE WITH SHUT-OFF VALVE AND 3/4" DRAIN LINE FROM ADJACENT SINK. CONNECT DRAIN LINE WITH 'DISHWASHER' TYPE FITTING. SUPPORT DRAIN LINE FROM BOTTOM OF COUNTER TOP AS REQUIRED BY CODE.	3/8"	---	3/4"	---
FD-1	2" FLOOR DRAIN - ZURN Z418N-1/2"P WITH 5" Dia. NICKEL-BRONZE STRAINER AND 2" DEEP SEAL P-TRAP. RUN 1/2" COLD WATER LINE TO TRAP PRIMER. REFER TO DETAIL M/P1B-3.1 FOR TYPICAL INSTALLATION.	---	1/2"	2"	2"
FD-2	2" ANTI LIGATURE FLOOR DRAIN - HIPAC SAFE-CELL 'CCR PRISON DRAIN ASSEMBLY WITH DIAL RING DESIGN AND 2" DEEP SEAL P-TRAP. RUN 1/2" COLD WATER LINE TO TRAP PRIMER. REFER TO DETAIL JP/1B-3.1 FOR TYPICAL INSTALLATION. SECURE STRAINER WITH SECURITY SCREWS.	---	1/2"	2"	2"
FD-3	2" ANTI LIGATURE FLOOR DRAIN - HIPAC SAFE-CELL 'CCR PRISON DRAIN ASSEMBLY WITH DIAL RING DESIGN AND 2" DEEP SEAL P-TRAP. PROVIDE TRAP SEAL. SECURE STRAINER WITH SECURITY SCREWS.	---	---	2"	2"
FS-1	FLOOR SINK WITH HALF GRATE - ZURN Z-1900-2 - 12"x12" FLOOR SINK WITH 1/2" GRATE, DOME STRAINER, WHITE ENAMEL FINISH, AND 4" DEEP SEAL P-TRAP.	---	---	4"	2"
FS-2	FLOOR SINK WITH THREE QUARTER GRATE - ZURN Z-1900-3 - 12"x12" FLOOR SINK WITH 3/4" GRATE, DOME STRAINER, WHITE ENAMEL FINISH, AND 4" DEEP SEAL P-TRAP.	---	---	4"	2"
HB-1	EXTERIOR HOSE BIBB - ZURN MODEL Z1305-VB "ECOLOTROL" NON-FREEZE HOSE BIBB IN RECESSED LOCKABLE BOX. PROVIDE VACUUM BREAKER HOSE ADAPTOR. LENGTH TO SUIT WALL THICKNESS. REFER TO DETAIL B/P1B-3.1 FOR TYPICAL INSTALLATION.	---	3/4"	---	---
HB-2	RECESSED EXTERIOR HOSE BIBB - ZURN MODEL Z1320-CXL-BFP-CL "ECOLOTROL" NON-FREEZE HOSE BIBB IN RECESSED LOCKABLE BOX WITH AUTOMATIC DRAIN. PROVIDE VACUUM BREAKER HOSE ADAPTOR. LENGTH TO SUIT WALL THICKNESS. REFER TO DETAIL B/P1B-3.1 FOR TYPICAL INSTALLATION.	---	3/4"	---	---
HB-3	INTERIOR HOSE BIBB - PRIER MODEL C355NP.50 WITH ANTI-SIPHON ANGLED SILL FAUCET WITH HOSE THREAD, VACUUM BREAKER, AND WHEEL HANDLE. LOCATED INSIDE PLUMBING CHASE BETWEEN CELLS WHERE SHOWN.	---	3/4"	---	---
ICE	ICE MAKER CONNECTION BOX - GUY GRAY MODEL BIM875 RECESSED WALL MOUNTED UTILITY BOX WITH 1/2" COLD WATER SUPPLY COMPLETE WITH SHUT-OFF VALVE WITH INTEGRAL WATER HAMMER ARRESTOR. MOUNTING BOX AT 4 INCHES ABOVE FLOOR.	---	1/2"	---	---
JS-1	FLOOR MOUNTED SERVICE SINK - KOHLER MODEL K-6710 "WHITBY" (28"x28") MOP SINK WITH K-8940 WIRE RIM GUARD, K-9142 PERFORATED STRAINER AND 2" DEEP SEAL P-TRAP. MOUNT T&S BRASS B-0674-BSTP FAUCET ON WALL WITH VACUUM BREAKER AND PAIL HOOK. PROVIDE 60" HOSE AND AND WALL MOUNTED HOSE CLIP.	1/2"	1/2"	2"	2"
L-1	ADA WALL HUNG LAVATORY - KOHLER 2032 "GREENWICH (SIZE 20x18) WITH MOEN L4601 LEVER HANDLE FAUCET, K-7715 OPEN GRID STRAINER, 1/2" STOPS AND 1-1/4" P-TRAP. PROVIDE INSULATING JACKET ON WATER AND WASTE LINES.	1/2"	1/2"	1-1/2"	1-1/2"

1 ALL COMBY UNITS ARE TO BE SUPPLIED WITH FLOD-TROL AND PINNED CLEANOUT PLUG.

FIXTURE SCHEDULE

SYM.	DESCRIPTION	HOT	COLD	WASTE	VENT
K-1	COMBI OVEN - KITCHEN EQUIPMENT #1 SUPPLIED AND INSTALLED BY KITCHEN EQUIPMENT CONTRACTOR. PLUMBER TO ROUGH-IN AND CONNECT 3/4" COLD WATER LINE WITH SHUT-OFF VALVE. RUN 2" DRAIN LINE TO NEAREST FLOOR SINK.	---	3/4"	2" TO FLOOR SINK	---
K-2	HAND SINK & FAUCET - KITCHEN EQUIPMENT #2 SUPPLIED AND INSTALLED BY KITCHEN EQUIPMENT CONTRACTOR. PLUMBER TO ROUGH-IN AND CONNECT 1/2" HOT AND COLD WATER LINES WITH SHUT-OFF VALVES TO FAUCET. PROVIDE 2" P-TRAP, TAIL PIECE WITH 2" WASTE AND VENT PIPING.	1/2"	1/2"	2"	2"
K-3	TILING KETTLE & WALL MOUNTED FILL FAUCET - KITCHEN EQUIPMENT #3 SUPPLIED AND INSTALLED BY KITCHEN EQUIPMENT CONTRACTOR. PLUMBER TO ROUGH-IN AND CONNECT 1/2" HOT AND COLD WATER LINES TO WALL MOUNTED FAUCET.	1/2"	1/2"	---	---
K-4	TILTING SKILLET BRAISING PAN - KITCHEN EQUIPMENT #4 SUPPLIED AND INSTALLED BY KITCHEN EQUIPMENT CONTRACTOR. PLUMBER TO ROUGH-IN AND CONNECT 1/2" COLD WATER LINE WITH SHUT-OFF VALVE	---	1/2"	---	---
K-5	FLOOR TROUGH - KITCHEN EQUIPMENT #5 SUPPLIED AND INSTALLED BY KITCHEN EQUIPMENT CONTRACTOR. PLUMBING TO ROUGH-IN AND CONNECT 4" WASTE LINE WITH P-TRAP. RISE 2" VENT UP IN WALL AS SHOWN ON PLANS.	---	---	4"	2"
K-27	HAND SINK & FAUCET - KITCHEN EQUIPMENT #2 SUPPLIED AND INSTALLED BY KITCHEN EQUIPMENT CONTRACTOR. PLUMBER TO ROUGH-IN AND CONNECT 1/2" HOT AND COLD WATER LINES WITH SHUT-OFF VALVES TO FAUCET. PROVIDE 2" P-TRAP, TAIL PIECE WITH 2" WASTE AND VENT PIPING.	1/2"	1/2"	2"	2"
K-28	SOILED DISHTABLE WITH DISPOSAL AND FAUCET - KITCHEN EQUIPMENT #28 SUPPLIED AND INSTALLED BY KITCHEN EQUIPMENT CONTRACTOR. PLUMBER TO ROUGH-IN AND CONNECT 1/2" HOT AND COLD WATER LINES TO FAUCET AND 2" WASTE LINE WITH P-TRAP AND VENT.	1/2"	1/2"	2"	2"
K-29	DISHWASHER - KITCHEN EQUIPMENT #29 SUPPLIED AND INSTALLED BY KITCHEN EQUIPMENT CONTRACTOR. PLUMBER TO ROUGH-IN AND CONNECT 3/4" HOT WATER AND 1/2" COLD WATER LINES TO BOOSTER HEATER. RUN 2" DRAIN LINE TO NEAREST FLOOR SINK.	3/4"	1/2"	2" TO FLOOR SINK	---
K-32	TRIPLE COMPARTMENT SINK AND FAUCET(S) - KITCHEN EQUIPMENT #32 SUPPLIED AND INSTALLED BY KITCHEN EQUIPMENT CONTRACTOR. PLUMBER TO ROUGH-IN AND CONNECT 1/2" HOT AND COLD WATER LINES TO EACH FAUCET AND 3/8" COLD WATER LINE TO ADD-ON-FAUCET. RUN WASTE LINE TO NEAREST FLOOR SINK.	1/2"	1/2" & 3/8"	TO FLOOR SINK	---
K-37	ICE MAKER AND STORAGE BIN - KITCHEN EQUIPMENT #37 SUPPLIED AND INSTALLED BY KITCHEN EQUIPMENT SUPPLIER. PLUMBER TO ROUGH-IN AND CONNECT 1/2" COLD WATER LINE WITH SHUT-OFF VALVE TO ICE MAKER THRU BACK-FLOW PREVENTION DEVICE AND THRU SUPPLIED FILTRATION SYSTEM. RUN 1/2" AND 3/4" DRAIN LINE FROM ICE MAKER AND STORAGE BIN TO NEAREST FLOOR SINK. PROVIDE 1/2" BACK-FLOW PREVENTION DEVICE ON WALL BEHIND ICE MAKER IN ACCESSIBLE LOCATION. RUN DRAIN LINE FROM BACK-FLOW PREVENTION DEVICE TO FLOOR SINK.	---	1/2"	TO FLOOR SINK	---
K-38	HAND SINK & FAUCET - KITCHEN EQUIPMENT #2 SUPPLIED AND INSTALLED BY KITCHEN EQUIPMENT CONTRACTOR. PLUMBER TO ROUGH-IN AND CONNECT 1/2" HOT AND COLD WATER LINES WITH SHUT-OFF VALVES TO FAUCET. PROVIDE 2" P-TRAP, TAIL PIECE WITH 2" WASTE AND VENT PIPING.	1/2"	1/2"	2"	2"
K-44	TWO COMPARTMENT SINK AND FAUCET - KITCHEN EQUIPMENT #44 SUPPLIED AND INSTALLED BY KITCHEN EQUIPMENT CONTRACTOR. PLUMBER TO ROUGH-IN AND CONNECT 1/2" HOT AND COLD WATER LINES TO FAUCET. RUN DRAIN LINE TO NEAREST FLOOR SINK.	1/2"	1/2"	TO FLOOR SINK	---

FIXTURE SCHEDULE

SYM.	DESCRIPTION	HOT	COLD	WASTE	VENT
K-46	PLANETARY MIXER WITH WALL MOUNTED FAUCET - KITCHEN EQUIPMENT #46 SUPPLIED BY KITCHEN EQUIPMENT CONTRACTOR. PLUMBER TO ROUGH-IN AND CONNECT 1/2" HOT AND COLD WATER LIENS TO FAUCET.	1/2"	1/2"	---	---
K-47	HAND SINK & FAUCET - KITCHEN EQUIPMENT #2 SUPPLIED AND INSTALLED BY KITCHEN EQUIPMENT CONTRACTOR. PLUMBER TO ROUGH-IN AND CONNECT 1/2" HOT AND COLD WATER LINES WITH SHUT-OFF VALVES TO FAUCET. PROVIDE 2" P-TRAP, TAIL PIECE WITH 2" WASTE AND VENT PIPING.	1/2"	1/2"	2"	2"
K-48	SINGLE COMPARTMENT SINK WITH FAUCET - KITCHEN EQUIPMENT #48 SUPPLIED AND INSTALLED BY KITCHEN EQUIPMENT CONTRACTOR. PLUMBER TO ROUGH-IN AND CONNECT 1/2" HOT AND COLD WATER LINES WITH SHUT-OFFS TO FAUCET. RUN DRAIN LINE TO NEAREST FLOOR SINK.	1/2"	1/2"	TO FLOOR SINK	---
OF-1	3" OVERFLOW DRAIN - JAY R. SMITH MODEL 1080 WITH UNDER DECK CLAMP, DOME STRAINER, 2" HIGH WATER DAM, AND 3" DRAIN LINE CONNECTION. REFER TO DETAIL D/P1B-3.1 FOR TYPICAL INSTALLATION.	---	---	3"	---
OF-2	6" OVERFLOW DRAIN - JAY R. SMITH MODEL 1080 WITH UNDER DECK CLAMP, DOME STRAINER, 2" HIGH WATER DAM, AND 6" DRAIN LINE CONNECTION. REFER TO DETAIL D/P1B-3.1 FOR TYPICAL INSTALLATION.	---	---	6"	---
RD-1	3" ROOF DRAIN - JAY R. SMITH MODEL 1010 WITH UNDER DECK CLAMP, DOME STRAINER, AND 3" DRAIN LINE CONNECTION. REFER TO DETAIL D/P1B-3.1 FOR TYPICAL INSTALLATION.	---	---	3"	---
RD-2	6" ROOF DRAIN - JAY R. SMITH MODEL 1010 WITH UNDER DECK CLAMP, DOME STRAINER, AND 6" DRAIN LINE CONNECTION. REFER TO DETAIL D/P1B-3.1 FOR TYPICAL INSTALLATION.	---	---	6"	---
RP-1	HOT WATER RECIRC PUMP - B&G SERIES LR-20BF 'LITTLE RED' WITH 3 GPM FLOW AT 8' HEAD AND 3/4" LINE CONNECTIONS. MOUNT NEAR WATER HEATER. REFER TO WATER HEATER PIPING DIAGRAM H/P1B-3.2 OR L/P1B-3.2 FOR TYPICAL PIPING CONNECTIONS. (120/60/1)	3/4"	---	---	---
S-1	DOUBLE COMPARTMENT SINK - ELKAY MODEL LR2519 WITH 18 GA TYPE 304 STAINLESS STEEL CONSTRUCTION, 1-HOLE FAUCET DRILLING, MOEN 7594C GOOSENECK FAUCET WITH LEVER HANDLE AND PULL-DOWN SPRAY, FAUCET, LK-99 STRAINER, 1-1/2" P-TRAP AND 1/2" BALL TYPE STOP VALVES.	1/2"	1/2"	1-1/2"	1-1/2"
SH-1	ADA SHOWER - LASCO 1603BFSD ONE-PIECE SHOWER WITH CENTER DRAIN, RIGHT HAND FOLDING SEAT, SOAP DISH, STAINLESS STEEL GRAB BARS, HAND HELD SPRAY HEAD WITH FLEXIBLE HOSE AND 24" SLIDE BAR, STAINLESS STEEL CURTAIN ROD WITH VINYL CURTAIN AND HOOKS, AND POWERS T425C6 THERMOSTATIC MIXING VALVE WITH LEVER HANDLE.	1/2"	1/2"	2"	2"
SH-2	ADA PENAL SHOWER - WILLOUGHBY MODEL US-3636-HC-FA-L-B3 ANTI LIGATURE SHOWER STALL WITH POLISHED STAINLESS STEEL CONSTRUCTION. PROVIDE E1L1 SINGLE TEMP ELECTRONIC VALVE WITH PZPB PUSH BUTTON, LRFX QUICK DISCONNECT HAND HELD SHOWER HEAD WITH 2.5 GPM FLOW, ICD SHOWER DRAIN WITH LRD5 DRAIN COVER, RD RECESS SOAP DISH, AND LRSC CURTAIN WITH TRACK. USE SECURITY SCREW FOR INSTALLATION. (120/60/1)	1/2"	1/2"	2"	2"
SH-3	PENAL SHOWER - WILLOUGHBY MODEL US-3636-FA ANTI LIGATURE SHOWER STALL WITH POLISHED STAINLESS STEEL CONSTRUCTION ICD SHOWER DRAIN WITH LRD5 DRAIN COVER, AND LRSC CURTAIN WITH TRACK. PROVIDE ACORN LR1741 SHOWER PANEL WITH EVS1 SINGLE TEMP ELECTRONIC VALVE WITH PPZ1 PUSH BUTTON, CSHS SHOWER HEAD WITH 2.5 GPM FLOW, RD RECESSED SOAP DISH, AND SW WALL SLEEVE. (120/60/1)	1/2"	1/2"	2"	2"

FIXTURE SCHEDULE

SYM.	DESCRIPTION	HOT	COLD	WASTE	VENT
TP-1	SINGLE TRAP PRIMER DEVICE - ZURN Z-1020XL IN-LINE TRAP PRIMER. MOUNT IN RECESSED BOX IN WALL BELOW LAVATORY WHERE SHOWN ON PLANS AND PROVIDE LOCKING COVER. RUN 1/2" COLD WATER LINE TO TRAP AS INDICATED ON PLANS. REFER TO DETAIL M/P1B-3.1 FOR TYPICAL INSTALLATION.	---	1/2"	---	---
TP-2	6 PORT TRAP PRIMER - MI-FAB M4-500-NPB IN-LINE PRIMER. MOUNT EXPOSED ON WALL IN UTILITY CHASE. RUN 1/2" COLD WATER TO EACH FLOOR DRAIN AS SHOWN ON PLANS. CAP UNUSED PORTS. REFER TO DETAIL J/P1B-3.1 FOR TYPICAL INSTALLATION. (120/60/1)	---	1/2"	---	---
US-1	KITCHEN UTILITY SPRAYER - KROWNE MODEL 19-203L SINGLE DECK MOUNTED FAUCET WITH SPRAYER COMPLETE WITH 72" FLEXIBLE S.S. HOSE, VACUUM BREAKER AND WALL HOOK. MOUNT ON TOP OF 42" HIGH WALL.	---	1/2"	---	---
WC-1	ADA FLUSH VALVE WATER CLOSET - KOHLER K-4368 "HIGHCLIFF" WITH ELONGATED BOWL, K-4670-C WHITE OPEN FRONT SEAT, SLOAN REGAL FLUSH VALVE AND BOLT CAPS.	---	1"	4"	2"
WC-2 (1)	STAINLESS COMBY UNIT - ACORN LIGATURE RESISTANT MODEL LR1449-LO-2-04-PPZ1-1.6 GPF-DMB-FTE-PC, LEFT SIDE OFFSET, ON FLOOR TOILET WITH FRONT SEAT, CONCEALED SINGLE TEMP METERING CONTROL VALVE WITH MIXING VALVE AND PUSH-BUTTON CONTROL, 1" & 1/2" COLD WATER LINE CONNECTIONS AND 1-1/2" & 3" WASTE LINE CONNECTIONS. (120/60/1)	1/2"	1/2" 1"	1-1/2" 3"	2"
WC-3 (1)	STAINLESS COMBY UNIT - ACORN LIGATURE RESISTANT MODEL LR1449-RO-2-04-PPZ1-1.6 GPF-DMB-FTE-PC, RIGHT SIDE OFFSET, ON FLOOR TOILET WITH FRONT SEAT, CONCEALED SINGLE TEMP METERING CONTROL VALVE WITH MIXING VALVE AND PUSH-BUTTON CONTROL, 1" & 1/2" COLD WATER LINE CONNECTIONS AND 1-1/2" & 3" WASTE LINE CONNECTIONS. (120/60/1)	1/2"	1/2" 1"	1-1/2" 3"	2"
WC-4 (1)	STAINLESS COMBY UNIT - ACORN LIGATURE RESISTANT MODEL LR1418-AL-2-03-FV-PPZ1-PBP-1.6 GPF-FTE-PC ANGLED LEFT, ON FLOOR TOILET WITH FRONT SEAT, CONCEALED SINGLE TEMP METERING CONTROL VALVE WITH MIXING VALVE AND PUSH-BUTTON CONTROL, 1" & 1/2" COLD WATER LINE CONNECTIONS AND 1-1/2" & 3" WASTE LINE CONNECTIONS. (120/60/1)	1/2"	1/2" 1"	1-1/2" 3"	2"
WC-5 (1)	STAINLESS COMBY UNIT - ACORN LIGATURE RESISTANT MODEL LR1418-AR-2-03-FV-PPZ1-PBP-1.6 GPF-FTE-PC ANGLED RIGHT, ON FLOOR TOILET WITH FRONT SEAT, CONCEALED SINGLE TEMP METERING CONTROL VALVE WITH MIXING VALVE AND PUSH-BUTTON CONTROL, 1" & 1/2" COLD WATER LINE CONNECTIONS AND 1-1/2" & 3" WASTE LINE CONNECTIONS. (120/60/1)	1/2"	1/2" 1"	1-1/2" 3"	2"
WC-6 (1)	STAINLESS COMBY UNIT - ACORN LIGATURE RESISTANT MODEL LR1418-CT-2-03-FV-PPZ1-PBP-1.6 GPF-FTE-PC CENTERED, ON FLOOR TOILET WITH FRONT SEAT, CONCEALED SINGLE TEMP METERING CONTROL VALVE WITH MIXING VALVE AND PUSH-BUTTON CONTROL, 1" & 1/2" COLD WATER LINE CONNECTIONS AND 1-1/2" & 3" WASTE LINE CONNECTIONS. (120/60/1) ADD MIXING VALVE	1/2"	1/2" 1"	1-1/2" 3"	2"
WF-1	8" WALL FLANGE - JAY R. SMITH MODEL 1770 WITH ROUGH-BRONZE FINISH AND WALL FLANGE. MOUNT AT 12" ABOVE FINISHED FLOOR.	---	---	8"	---
WH-1	100 GALLON GAS FIRED WATER HEATER - STATE MODEL SUF100-199NE ATMOSPHERIC WATER HEATER WITH 100 GALLON CAPACITY, 199,000 BTUH, (120/60/1). 1-1/2" SUPPLIES AND T&P RELIEF VALVE, EXPANSION TANK, HEAT TRAP NIPPLES, AND SYMMONS 7-500 MIXING VALVE. REFER TO DETAIL H/P1B-3.2 FOR TYPICAL INSTALLATION. EXTEND WATER HEATER VENTS UP THRU ROOF.	1-1/2"	1-1/2"	---	---
WH-2	50 GALLON WATER HEATER - STATE MODEL GS6-50-YBDS WITH 50 GALLON CAPACITY, GAS FIRED UNIT WITH 40,000 BTU INPUT, 3/4" SUPPLIES, T&P RELIEF VALVE, AMTROL ST-5 THERMAL EXPANSION TANK AND HEAT TRAP NIPPLES. RISE 6" DIRECT VENT UP AND EXTEND THRU EXTERIOR WALL. REFER TO DETAIL L/P1B-3.2 FOR TYPICAL INSTALLATION.	3/4"	3/4"	---	---
WH-3	UNDER COUNTER ELECTRIC INSTANTANEOUS WATER HEATER - EEMAX MODEL AMX05240T 'ACCUMIX II' WITH 3.6 KW HEATING ELEMENT (17 AMPS) AND 1/2" WATER LINE CONNECTIONS. 0.5 GPM FLOW RATE WITH 49 Deg. TR (208 VOLT - 1 PHASE) REFER TO DETAIL N/P1B-3.1 FOR TYPICAL INSTALLATION.	1/2"	1/2"	---	---
WS-1	DUPLEX SYSTEM WITH SINGLE BRINE TANK - SIMILAR TO WATER TECH MODEL RS2409-2SS204 WITH 200,000 GRAINS CAPACITY AT 6 POUNDS SALT SETTING, 85 MAXIMUM GPM FLOW AND 68 CONTINUOUS FLOW RATES, AND 2" METERED VALVE. ACTUAL SOFTENER TO BE SIZE BY LOCAL VENDER BASED ON LOCAL PH VALUE OF WATER.	---	2"	TO FLOOR SINK	---

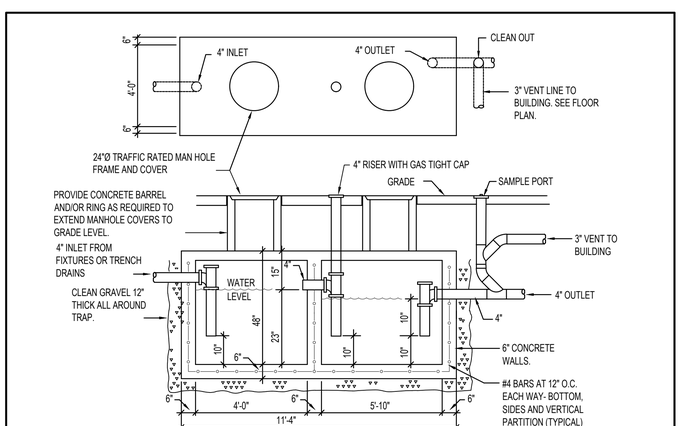

A GREASE INTERCEPTOR DETAIL — NO SCALE

PLUMBING LEGEND

SYMBOL	DESCRIPTION
V	VENT
VTR	VENT THRU ROOF
CO	CLEANOUT
WCO	WALL CLEANOUT
COTG	CLEANOUT TO GRADE
	PIPE DROP
	PIPE RISE
	BALL TYPE ISOLATION VALVE
	SOIL OR WASTE PIPING
	VENT LINE PIPING
	HARD COLD WATER PIPING
	DOMESTIC HOT WATER PIPING
	DOMESTIC HW RECIRC. PIPING
CD	CONDENSATE DRAIN LINE
G	GAS PIPING
G	GAS REGULATOR
GW	GREASE WASTE
	PRESSURE REDUCUING STATION
	CONNECTION/DISCONNECTION POINT

GAS LOAD CALCULATIONS

RT 1	110,000 BTU
RT 2	250,000 BTU
RT 3	150,000 BTU
RT 4	150,000 BTU
RT 5	250,000 BTU
RT 6	250,000 BTU
RT 7	250,000 BTU
RT 8	250,000 BTU
RT 9	110,000 BTU
RT 10	110,000 BTU
RT 11	400,000 BTU
UH 1	30,000 BTU
UH 2	45,000 BTU
UH 3	45,000 BTU
WH-1 (TYP. OF3)	199,000 BTU
WH-2	40,000 BTU
MA 1	400,000 BTU
(2) EMERG. GENERATORS	10,800,000 BTU

PHASE 1A (EXISTING) LOAD	1,873,000 BTU
PHASE 1B (CURRENT) LOAD	14,237,000 BTU
PHASE 2 (FUTURE) LOAD	898,000 BTU
PHASE 3 (FUTURE) LOAD	449,000 BTU
PHASE 4 (FUTURE) LOAD	449,000 BTU
PHASE 5 (FUTURE) LOAD	449,000 BTU
TOTAL BUILDING LOAD	18,355,000 BTU

PHASE 1B GAS LOAD	14,237,000 BTU
TOTAL METER DESIGN	18,750,000 BTU
TOTAL DESIGN LENGTH	500 FEET
DISCHARGE PRESSURE	5 PSI
MAIN GAS PIPE SIZE	3"

PROFESSIONAL ENGINEER REGISTERED P-18184 Feb 27, 2025 STATE OF IDAHO DAVID L. HANSEN

Engineered Systems Associates
1355 EAST CENTER
POCATELLO, IDAHO 83201
PHONE: (208) 233-0501
FAX: (208) 233-0529
EMAIL: esa@engsystems.com
ESA JOB NUMBER: 24048

02.28.25

DATE

AN ADDITION FOR:
TWIN FALLS COUNTY JAIL
2515 Wright Ave, Twin Falls, ID 83301
PHASE 1 PART B - PLUMBING FIXTURE SCHEDULE

Laughlin Ricks Architecture
architecture/planning
134 3RD AVE. E. * Twin Falls, Idaho 83301
(208) 736-8050 Fax: (208) 733-0950

DATE: 02/28/2025
M JENSEN Drawn — D HANSEN Checked

P1B-3.3

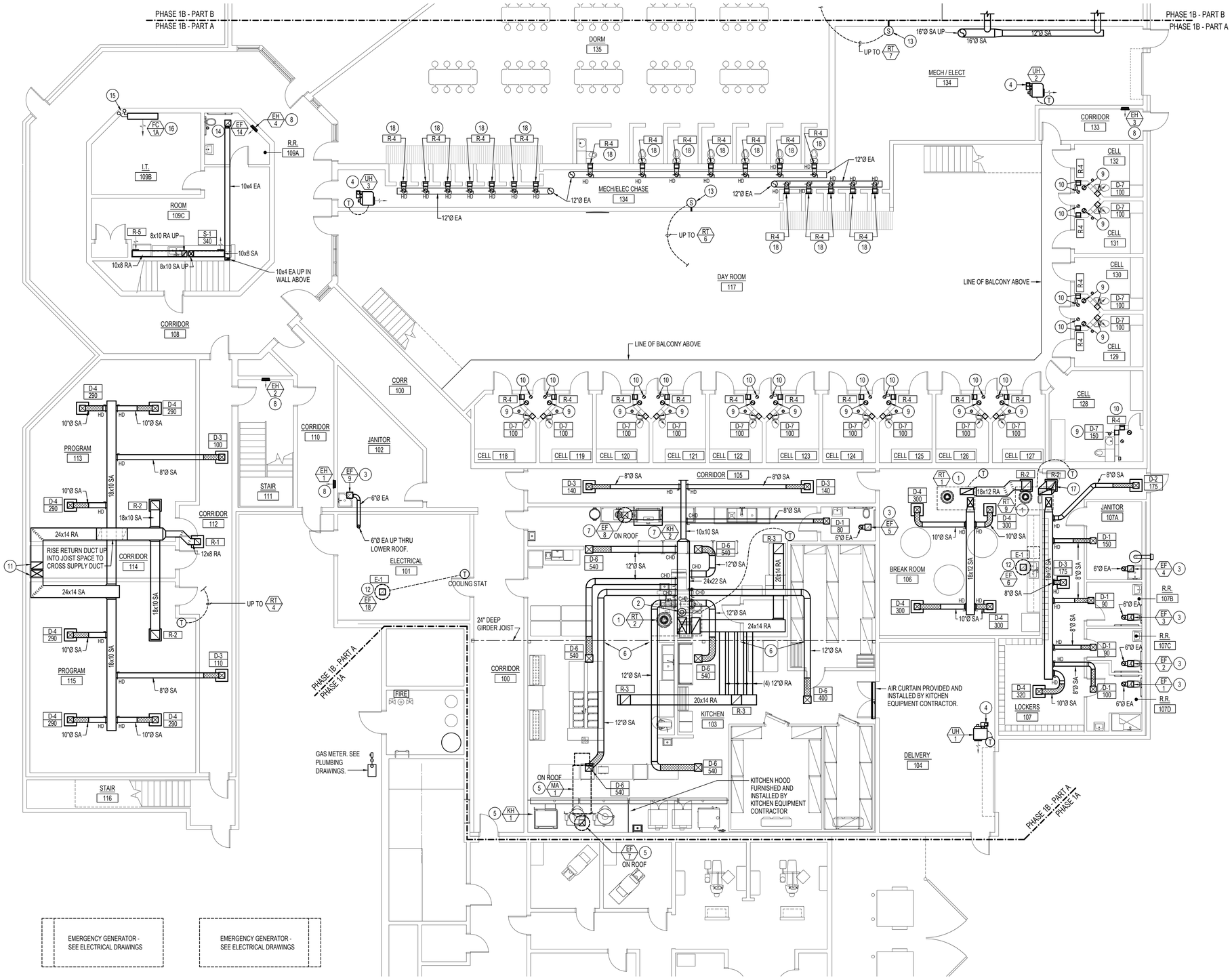

PHASE 1 PART B - MECHANICAL FLOOR PLAN - PART A

SCALE: 1/8" = 1'-0"

North

PLAN NOTES:

1. INSTALL PACKAGED ROOF MOUNTED UNIT AS CALLED OUT IN SCHEDULE. MOUNT ON MINIMUM 14" HIGH ROOF CURB. COORDINATE UNIT LOCATION WITH BUILDING STRUCTURE TO DROP SUPPLY AND RETURN DUCTS BETWEEN ROOF JOISTS. REFER TO DETAIL L/M1B-3.1 FOR TYPICAL INSTALLATION.
2. INSTALL SMOKE DETECTOR IN UNIT SUPPLY DUCT FOR EMERGENCY UNIT SHUT-DOWN. CONNECT SMOKE DETECTOR TO BUILDING FIRE ALARM SYSTEM. SEE ELECTRICAL DRAWINGS.
3. INSTALL CEILING MOUNTED EXHAUST COMPLETE WITH CEILING GRILLE AS CALLED OUT IN SCHEDULE. RISE 6"Ø EXHAUST DUCT UP THRU ROOF WITH ROOF CAP. REFER TO DETAIL C/M1B-3.1 FOR TYPICAL INSTALLATION.
4. SUPPORT UNIT HEATER FROM ROOF STRUCTURE. RISE (2) FLUES UP THRU ROOF WITH CONCENTRIC TYPE FITTING. REFER TO DETAIL J/M1B-3.1 FOR TYPICAL INSTALLATION.
5. KITCHEN HOOD EXHAUST FAN AND MAKE-UP AIR UNIT SUPPLIED AND INSTALLED BY KITCHEN EQUIPMENT CONTRACTOR. MECHANICAL CONTRACTOR TO PROVIDE MINIMUM 14" HIGH COMBINATION ROOF CURB FOR EQUIPMENT AS REQUIRED. COORDINATE WITH KITCHEN EQUIPMENT SUPPLIER. (REFER TO KITCHEN HOOD DRAWINGS.)
6. COORDINATE ROUND BRANCH DUCTS WITH OPEN WEB GIRDER BEAM. ADJUST DUCT LOCATIONS AS REQUIRED FOR WEB SPACING.
7. DISHWASHER, DISHWASHER HOOD AND ROOF MOUNTED EXHAUST FAN FURNISHED AND INSTALLED BY KITCHEN EQUIPMENT CONTRACTOR. MECHANICAL CONTRACTOR TO PROVIDE MINIMUM 14" HIGH COMBINATION ROOF CURB FOR EXHAUST FAN AS REQUIRED. COORDINATE WITH KITCHEN EQUIPMENT SUPPLIER. (REFER TO KITCHEN HOOD DRAWINGS.)
8. ELECTRIC HEATER TO BE MOUNTED RECESSED IN WALL AT 8" ABOVE FLOOR. MAINTAIN REQUIRED CLEARANCES FOR ADA AND EGRESS AS REQUIRED BY CODE.
9. DROP 8"Ø SA DUCT DOWN FROM UPPER LEVEL. CONNECT TO D-7 GRILLE MOUNTED NEAR CEILING. COORDINATE WITH WATER, WASTE AND VENT PIPING, AND RETURN DUCTS IN CHASE ALSO. REFER TO LARGE SCALE PLAN ON SHEET M1B-1.2 AND TO PLUMBING DRAWINGS.
10. INSTALL R-4 RETURN AIR GRILLE AT 8" ABOVE FLOOR. CONNECT 8"Ø RETURN DUCT TO GRILLE AND RISE UP THRU UPPER LEVEL FLOOR. REFER TO SHEET M1B-1.3 AND TO LARGE SCALE PLAN ON SHEET M1B-1.2. COORDINATE DUCTWORK WITH WATER, WASTE AND VENT PIPING, AND RETURN DUCTS IN CHASE ALSO.
11. 24x14 SUPPLY AIR AND RETURN AIR DUCT DOWN FROM ABOVE. OFFSET IN CEILING SPACE AND RUN TO GRILLES AS SHOWN. REFER TO SHEET M1B-1.3 FOR CONTINUATION OF DUCTWORK ON UPPER LEVEL.
12. INSTALL ROOF MOUNTED EXHAUST FAN AS CALLED OUT IN SCHEDULE. MOUNT ON MINIMUM 14" HIGH ROOF CURB. COORDINATE FAN LOCATION WITH BUILDING STRUCTURE TO DROP EXHAUST DUCT DOWN BETWEEN ROOF JOISTS. PROVIDE CEILING GRILLE AND CONNECT TO EXHAUST DUCT. REFER TO DETAIL G/M1B-3.1 FOR TYPICAL INSTALLATION.
13. INSTALL TEMPERATURE SENSOR IN PLBG CHASE / MECHANICAL & PLUMBING SPACE. SENSOR TO HAVE PROBE EXTENSION TO FIT THICKNESS OF WALL. EXTEND PROBE THRU WALL AS SHOWN FOR EQUIPMENT CONTROL. PROBE NOT TO EXTEND BEYOND FACE OF WALL. SEAL AROUND PROBE WITH CAULKING TO MAKE WALL SURFACE SMOOTH. REFER TO DETAIL K/M1B-3.1.
14. INSTALL CEILING MOUNTED EXHAUST COMPLETE WITH CEILING GRILLE AS CALLED OUT IN SCHEDULE. RISE 10x4 EXHAUST DUCT UP AND RUN AS TIGHT TO CEILING AS POSSIBLE TO RISE UP IN WALL ABOVE. SEE SHEET M1B-1.3 FOR CONTINUATION OF 10x4 EXHAUST DUCT ON UPPER LEVEL.
15. RISE REFRIGERANT LINES UP IN WALL TO ROOF MOUNTED EQUIPMENT. PIPING TO MATCH SLOPE OF VERTICAL WALLS ABOVE. SEE SHEET M1B-1.3 FOR CONTINUATION OF PIPING AND LOCATION OF ROOF TOP EQUIPMENT.
16. MOUNT INDOOR HEAT PUMP (FC-1A) ON WALL AS HIGH AS POSSIBLE. COORDINATE LOCATION WITH ELECTRONIC EQUIPMENT IN ROOM. REFER TO PLUMBING DRAWINGS FOR ROUTING OF CONDENSATE DRAIN LINE IN WALLS.
17. TRANSITION RETURN DUCT AS REQUIRED TO CONNECT TO ROOF TOP UNIT.
18. INSTALL R-4 GRILLE AS HIGH AS POSSIBLE IN SHOWER OR TOILET STALL. CONNECT 8"Ø EXHAUST DUCT TO BACK OF METAL PLENUM AND RISE P TO 10'-0" ABOVE MAIN LEVEL FLOOR. PROVIDE BALANCING DAMPER IN DUCT. CONNECT ALL 8"Ø EXHAUST DUCTS TO 12"Ø HORIZONTAL EXHAUST DUCT AS SHOWN BEFORE EXTENDING UP THRU ROOF. REFER TO SHEET M1B-1.3 FOR CONTINUATION OF EXHAUST DUCTS ON UPPER LEVEL.

PROFESSIONAL ENGINEER REGISTERED P-18184 Feb 27, 2025 STATE OF IDAHO DAVID L. HANSEN

Engineered Systems Associates
1355 EAST CENTER
POCATELLO, IDAHO 83201
PHONE: (208) 233-0501
FAX: (208) 233-0529
EMAIL: esa@engsystems.com
ESA JOB NUMBER: 24048

02.28.25

DATE

AN ADDITION FOR:
TWIN FALLS COUNTY JAIL
2515 Wright Ave, Twin Falls, ID 83301
PHASE 1 PART B - MECHANICAL FLOOR PLAN - PART A

Laughlin Ricks Architecture
architecture/planning
134 3RD AVE. E. * Twin Falls, Idaho 83301
(208) 736-8050 Fax: (208) 733-0950

DATE: 02/28/2025
M JENSEN Drawn
D HANSEN Checked

M1B-1.1

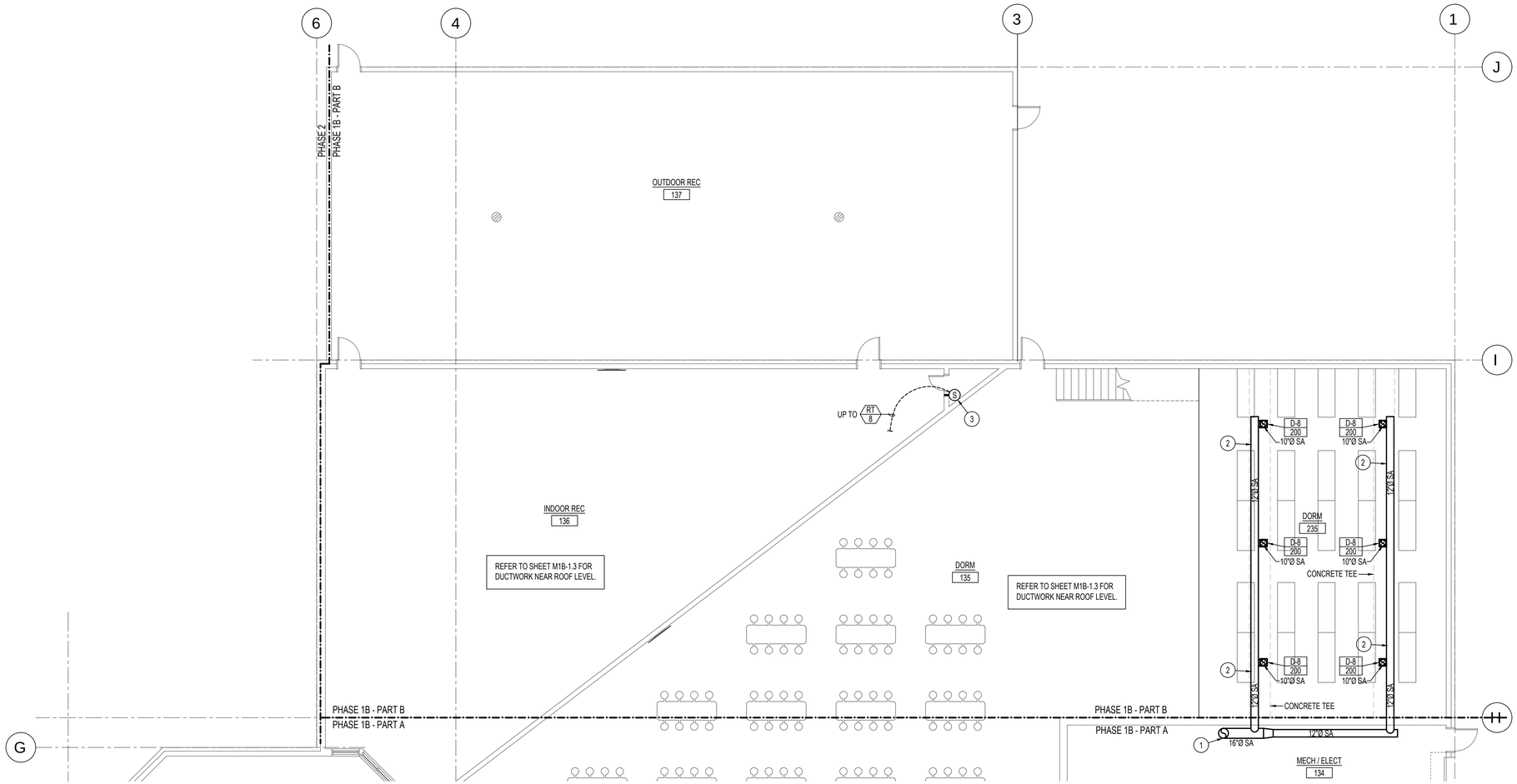

PHASE 1 PART B - MECHANICAL FLOOR PLAN - PART B

SCALE: 1/8" = 1'-0"

North

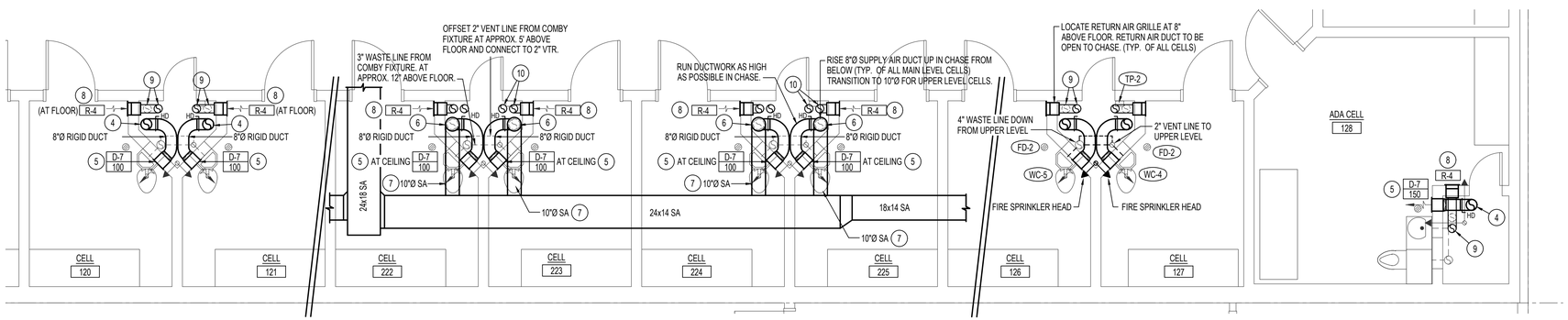

TYPICAL LARGE SCALE CELL PLANS

SCALE: 1/4" = 1'-0"

North

PLAN NOTES:

1. RISE 16"Ø SUPPLY AIR DUCT UP IN MECHANICAL SPACE TO UPPER LEVEL CEILING. REFER TO SHEET M1B-1.3 FOR CONTINUATION OF DUCT ON UPPER LEVEL. COORDINATE ACTUAL LOCATION WITH ALL OTHER TRADES.
2. RUN DUCTWORK AS TIGHT AS POSSIBLE TO BOTTOM OF MEZZANINE FLOOR STRUCTURE. RUN BRANCH DUCTS BETWEEN CONCRETE TEES AS SHOWN TO CONNECT TO CEILING DIFFUSERS.
3. INSTALL TEMPERATURE SENSOR IN PLBG CHASE / MECHANICAL & PLUMBING SPACE. SENSOR TO HAVE PROBE EXTENSION TO FIT THICKNESS OF WALL. EXTEND PROBE THRU WALL AS SHOWN FOR EQUIPMENT CONTROL. PROBE NOT TO EXTEND BEYOND FACE OF WALL. SEAL AROUND PROBE WITH CAULKING TO MAKE WALL SURFACE SMOOTH. REFER TO DETAIL K/M1B-3.1.
4. DROP 8"Ø RIGID SA DUCT DOWN FROM UPPER LEVEL. CONNECT TO D-7 GRILLE MOUNTED NEAR CEILING WITH 8"Ø RIGID DUCT. SEAL CONNECTIONS AIR TIGHT. COORDINATE RIGID DUCT WITH WASTE, WATER AND VENT PIPING AND WITH FIRE SPRINKLER PIPING. PROVIDE BALANCING DAMPER IN DUCT AND BALANCE TO MAXIMUM CFM AS SHOWN. COORDINATE WITH RETURN AIR DUCTS IN UTILITY CHASE.
5. INSTALL PERFORATED SECURITY GRILLE NEAR TO CEILING. EXTEND INTO UTILITY CHASE AND CONNECT TO 8"Ø RIGID DUCT AS SHOWN. COORDINATE GRILLE AND DUCT LOCATION WITH WATER, WASTE AND VENT PIPING AND WITH FIRE SPRINKLER HEAD. KEEP AS CLOSE TO CORNER AS POSSIBLE.
6. DROP 10"Ø RIGID SA DUCT DOWN THRU UPPER LEVEL CEILING. CONNECT TO D-7 GRILLE MOUNTED NEAR CEILING OF UPPER LEVEL WITH 8"Ø RIGID DUCT. PROVIDE BALANCING DAMPER IN DUCT AND BALANCE TO MAXIMUM CFM AS SHOWN. SEAL CONNECTIONS AIR TIGHT. COORDINATE RIGID DUCT WITH WASTE, WATER AND VENT PIPING AND WITH FIRE SPRINKLER PIPING. REDUCE VERTICAL DUCT TO 8"Ø (RIGID) AND DROP DOWN THRU MEZZANINE FLOOR TO MAIN LEVEL UTILITY CHASE. SEAL ALL CEILING AND FLOOR PENETRATIONS AIR TIGHT.
7. CONNECT 10"Ø SUPPLY AIR BRANCH DUCT TO MAIN SUPPLY AIR DUCT ABOVE UPPER LEVEL CEILING. COORDINATE SUPPLY DUCT WITH RETURN DUCT(S), ELECTRICAL CONDUIT, AND WITH BUILDING STRUCTURE.
8. INSTALL R-4 RETURN AIR GRILLE AT 8" ABOVE FLOOR. CONNECT GRILLE TO 8" Ø RIGID VERTICAL RETURN DUCT WITH RIGID DUCT. SEAL ALL CONNECTIONS AIR TIGHT. COORDINATE DUCTWORK WITH WATER, WASTE AND VENT PIPING, AND SUPPLY DUCTS IN CHASE ALSO.
9. RISE 8"Ø RIGID RETURN DUCT UP THRU UPPER LEVEL FLOOR. LEAVE ENOUGH SPACE BETWEEN GRILLE AND DUCT TO ALLOW A SECOND 8"Ø DUCT ON UPPER LEVEL. COORDINATE DUCTWORK WITH WATER, WASTE AND VENT PIPING, AND SUPPLY DUCTS IN CHASE ALSO.
10. INSTALL R-4 RETURN AIR GRILLE AT 8" ABOVE UPPER LEVEL FLOOR. CONNECT GRILLE TO 8" Ø RIGID RETURN DUCT TO GRILLE WITH RIGID DUCT. SEAL ALL CONNECTIONS AIR TIGHT. DO NOT CONNECT THE MAIN LEVEL AND UPPER LEVEL RETURN DUCTS TOGETHER UNTIL ABOVE CEILING OF UPPER LEVEL. COORDINATE DUCTWORK WITH WATER, WASTE AND VENT PIPING, AND SUPPLY DUCTS IN CHASE ALSO.

02.28.25

DATE			

AN ADDITION FOR:
TWIN FALLS COUNTY JAIL
2515 Wright Ave, Twin Falls, ID 83301
PHASE 1 PART B - MECHANICAL FLOOR PLAN - PART B

Laughlin Ricks Architecture
architecture/planning
134 3RD AVE. E. * Twin Falls, Idaho 83301
(208) 736-8050 Fax: (208) 733-0950

PROFESSIONAL ENGINEER REGISTERED 18184 Feb 27, 2025 STATE OF IDAHO DAVID L. HANSEN

Engineered Systems Associates
1355 EAST CENTER
POCATELLO, IDAHO 83201
PHONE: (208) 233-0501
FAX: (208) 233-0529
EMAIL: eso@engsystems.com
ESA JOB NUMBER: 24048

DATE: 02/28/2025
M JENSEN Drawn — D HANSEN Checked

M1B-1.2

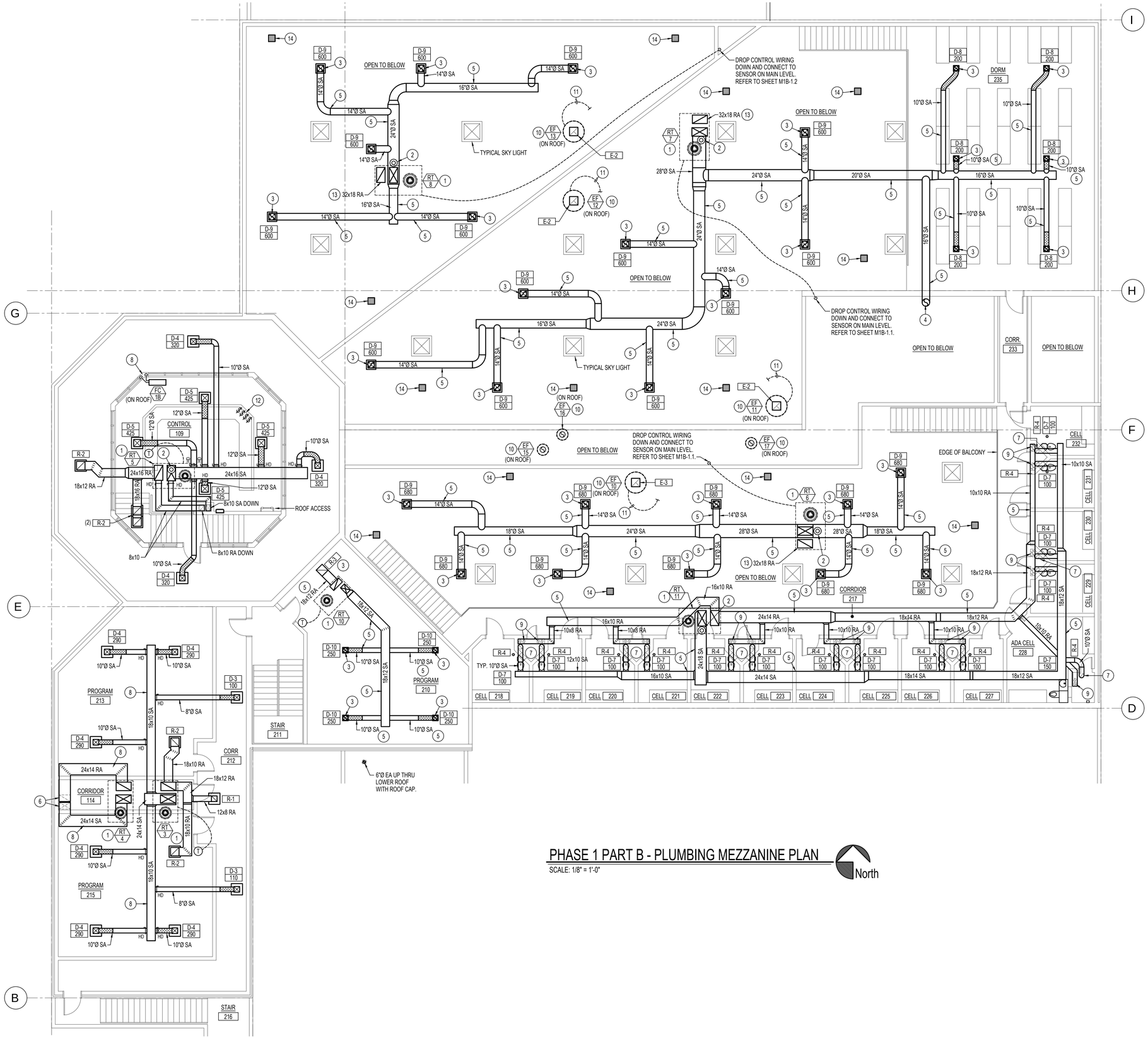

PHASE 1 PART B - PLUMBING MEZZANINE PLAN

SCALE: 1/8" = 1'-0"

North

PLAN NOTES:

1. INSTALL PACKAGED ROOF MOUNTED UNIT AS CALLED OUT IN SCHEDULE. MOUNT ON MINIMUM 14" HIGH ROOF CURB. COORDINATE UNIT LOCATION WITH BUILDING STRUCTURE TO DROP SUPPLY AND RETURN DUCTS BETWEEN ROOF JOISTS. REFER TO DETAIL L/M1B-3.1 FOR TYPICAL INSTALLATION.
2. INSTALL SMOKE DETECTOR IN UNIT SUPPLY DUCT FOR EMERGENCY UNIT SHUT-DOWN. CONNECT SMOKE DETECTOR TO BUILDING FIRE ALARM SYSTEM. SEE ELECTRICAL DRAWINGS.
3. DROP DUCTWORK DOWN THRU CONCRETE TEE TO SERVE DIFFUSER / GRILLE BELOW. REFER TO STRUCTURAL PLANS FOR OPENING IN CONCRETE TEE ASSEMBLY.
4. RUN 16"Ø SUPPLY AIR DUCT DOWN THRU CONCRETE TEE TO MAIN LEVEL BELOW. REFER TO STRUCTURAL PLANS FOR OPENING IN CONCRETE TEE ASSEMBLY. REFER TO SHEET M1B-1.2 FOR CONTINUATION OF DUCT BELOW.
5. RUN DUCTWORK ABOVE CONCRETE TEES IN ATTIC SPACE. COORDINATE WITH SKY LIGHTS, PIPING, ELECTRICAL CONDUITS, AND FIRE SPRINKLER PIPING.
6. 24x14 SUPPLY AIR AND RETURN AIR DUCTS DOWN IN CHASE TO MAIN LEVEL. OFFSET IN CEILING SPACE OF UPPER LEVEL AND CONNECT TO ROOF MOUNTED UNIT AS SHOWN. REFER TO SHEET M1B-1.1 FOR CONTINUATION OF DUCTWORK ON MAIN LEVEL.
7. DROP 10"Ø SA DUCT DOWN FROM ABOVE CEILING. CONNECT 8"Ø TO D-7 GRILLE MOUNTED NEAR CEILING OF UPPER LEVEL. REDUCE 10"Ø DUCT TO 8"Ø AND DROP DOWN THRU MEZZANINE FLOOR TO MAIN LEVEL. REFER TO SHEET M1B-1.1 FOR CONTINUATION OF SUPPLY DUCT. COORDINATE DUCTS WITH WATER, WASTE AND VENT, AND FIRE SPRINKLER PIPING, AND RETURN DUCTS IN CHASE ALSO. REFER TO LARGE SCALE PLAN ON SHEET M1B-1.2 AND TO PLUMBING DRAWINGS. CHASES WILL BE CONGESTED AND COORDINATION BETWEEN ALL TRADES IS CRITICAL.
8. MOUNT FAN COIL CONDENSING UNIT ON ROOF WITH MINIMUM 14" HIGH ROOF CURB. DROP REFRIGERANT LINES DOWN THRU ROOF WITH 180 DEGREE CPVC GOOSENECK FITTING AND EXTEND PIPING DOWN IN WALL TO LOWER LEVEL. REFER TO SHEET M1B-1.1 FOR LOCATION OF INDOOR FAN COIL UNIT. REFER TO DETAIL D/M1B-3.2 FOR PIPING PENETRATION THRU ROOF AND TO DETAIL E/M1B-3.2 FOR TYPICAL INSTALLATION AND PIPING CONNECTIONS.
9. INSTALL R-4 RETURN AIR GRILLE AT 8" ABOVE FLOOR. CONNECT 8"Ø RETURN DUCT TO GRILLE AND RISE UP ABOVE CEILING. REFER TO SHEET M1B-1.1 AND TO LARGE SCALE PLAN ON SHEET M1B-1.2 FOR 8"Ø RETURN DUCT(S) UP FROM MAIN LEVEL. COORDINATE DUCTWORK WITH WATER, WASTE AND VENT PIPING, AND SUPPLY DUCTS IN CHASE ALSO.
10. MOUNT EXHAUST FAN ON ROOF WITH MINIMUM 14" HIGH ROOF CURB. DROP DUCT (SAME SIZE AS FAN) DOWN THRU ROOF AND CONCRETE TEE ASSEMBLY. PROVIDE 'EGG-CRATE' GRILLE ON BOTTOM OF DUCT AT BOTTOM OF CONCRETE TEE.
11. INTERLOCK ROOF MOUNTED FAN TO FIRE ALARM SYSTEM TO OPERATE IN CASE OF EMERGENCY FOR SMOKE EVACUATION FROM SPACE. PROVIDE MANUAL OVERRIDE SWITCH FOR FAN AND PLACE IN CONTROL ROOM. LABEL SWITCH ACCORDINGLY FOR CORRESPONDING ROOM SERVED.
12. MANUAL OVERRIDE SWITCHES FOR (4) ROOF MOUNTED SMOKE EVACUATION FANS. (EF/10-13) REFER TO ELECTRICAL DRAWINGS FOR EXACT LOCATION OF SWITCHES IN CONTROL ROOM.
13. DROP RETURN DUCT DOWN THRU ROOF INTO ATTIC SPACE RETURN AIR PLENUM AND LEAVE OPEN TO SPACE.
14. 14x14 OPENING IN CONCRETE TEE ASSEMBLY TO PROVIDE RETURN AIR BACK TO ROOFTOP UNIT. REFER TO STRUCTURAL DRAWINGS. MECH. CONTRACTOR TO PROVIDE AND INSTALL 1" WIDE x 1/4" STEEL FRAME AROUND OPENING WITH 1/2" STEEL MESH. PAINT FRAME AND MESH TO MATCH COLOR OF BOTTOM OF TEE STRUCTURE.

02.28.25

DATE

AN ADDITION FOR:
TWIN FALLS COUNTY JAIL
2515 Wright Ave, Twin Falls, ID 83301
PHASE 1 PART B - PLUMBING MEZZANINE PLAN

Laughlin Ricks Architecture
architecture/planning
134 3RD AVE. E. * Twin Falls, Idaho 83301
(208) 736-8050 Fax: (208) 733-0950

PROFESSIONAL ENGINEER REGISTERED
P-18184
Feb 27, 2025
STATE OF IDAHO
DAVID L. HANSEN

Engineered Systems Associates
1355 EAST CENTER
POCATELLO, IDAHO 83201
PHONE: (208) 233-0501
FAX: (208) 233-0529
EMAIL: esa@engsystems.com

ESA JOB NUMBER: 24048

DATE: 02/28/2025

M.JENSEN Drawn | D.HANSEN Checked

M1B-1.3

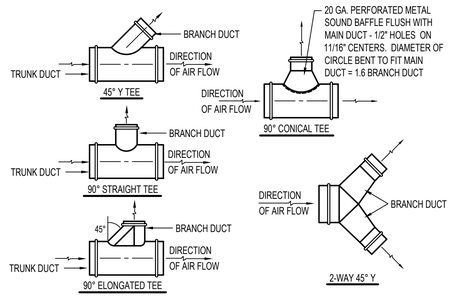

A ROUND DUCT FITTING DETAILS — NO SCALE

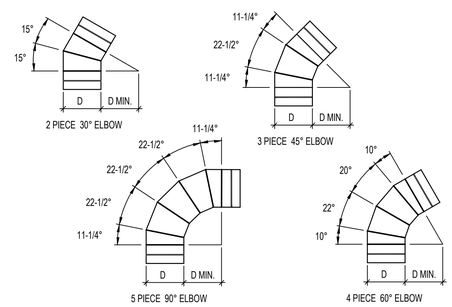

B ROUND DUCT ELBOW DETAILS — NO SCALE

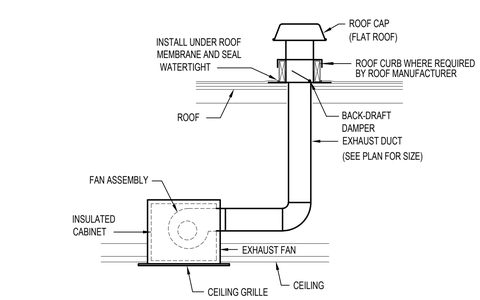

C CEILING MOUNTED EXHAUST FAN — NO SCALE

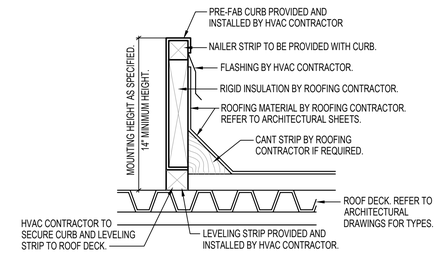

D TYPICAL PRE-FAB CURB DETAIL — NO SCALE

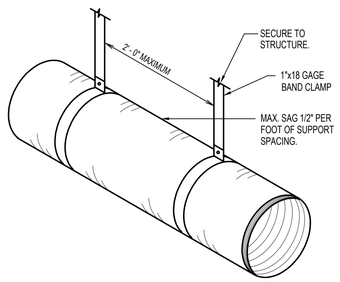

E FLEXIBLE DUCT SUPPORT DETAIL — NO SCALE

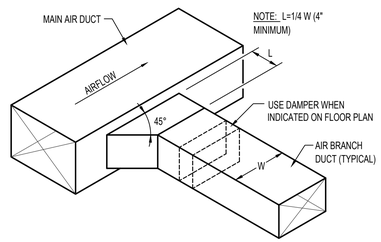

F RECTANGULAR DUCT CONNECTION DETAIL — NO SCALE

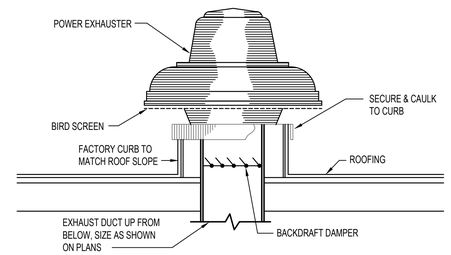

G ROOF MOUNTED EXHAUST FAN DETAIL — NO SCALE

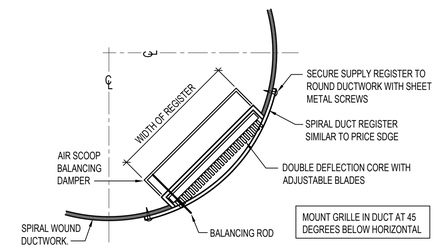

H ROUNDED GRILLE INSTALLATION DETAIL — NO SCALE

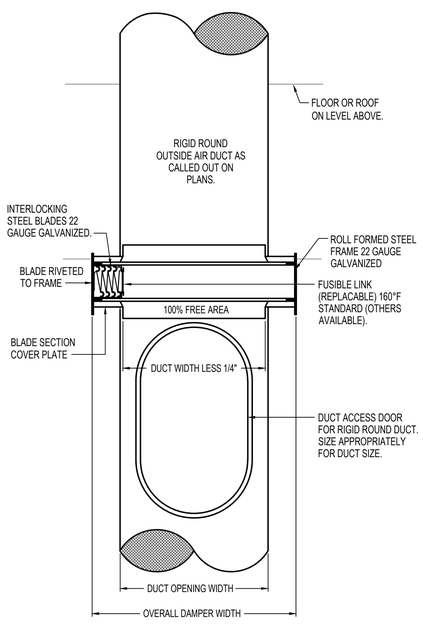

M ROUND DUCT FIRE DAMPER DETAIL — NO SCALE

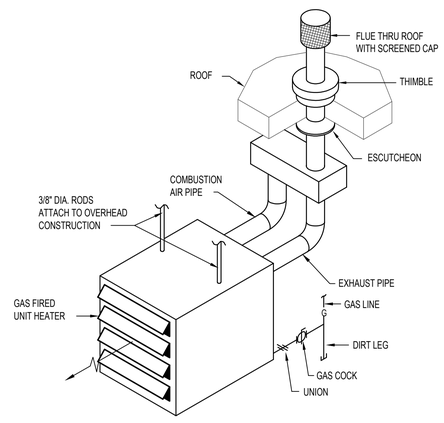

J UNIT HEATER INSTALLATION DETAIL — NO SCALE

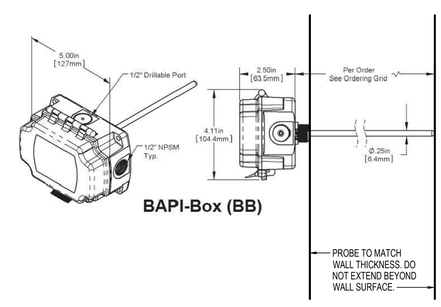

K TEMPERATURE SENSOR WITH PROBE DETAIL — NO SCALE

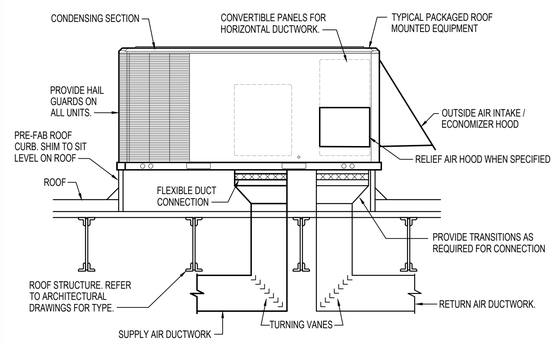

L ROOF TOP HVAC UNIT INSTALLATION DETAIL — NO SCALE

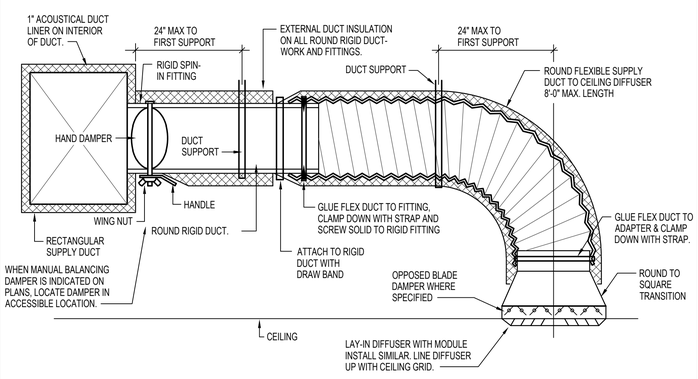

N TYPICAL CEILING DIFFUSER DETAIL WITH FLEXIBLE DUCT — NO SCALE

DIMENSION OF LONGEST SIDE, INCHES	SHEET METAL GAGE (ALL FOUR SIDES)	TRANSVERSE REINFORCING (1)		
		MINIMUM REINFORCING ANGLE SIZE AND MAXIMUM LONGITUDINAL SPACING BETWEEN TRANSVERSE JOINTS &/OR INTERMEDIATE REINFORCING	AT JOINTS	
			DRIVE SLIP	HEMMED S SLIP
			RECOM-MENDED GAGE	RECOM-MENDED GAGE
UP THRU 12	26	NONE REQUIRED	26	26
13 - 18	24	NONE REQUIRED	24	24
19 - 30	24	1"x1"x1/8" @ 60 IN	-	24

(1) TRANSVERSE REINFORCING SIZE IS DETERMINED BY DIMENSION OF SIDE TO WHICH ANGLE IS APPLIED.

METAL FASTENERS - OMARK INSULPINS, DURO DYNE FASTENERS OR GRIPNAILS.

GRIP NAILS SHALL BE INSTALLED BY GRIPNAIL AIR HAMMER OR BY AUTOMATIC FASTENER EQUIP.

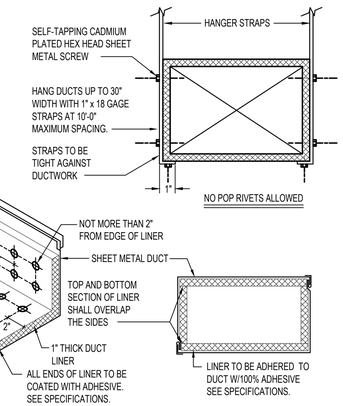

ENDS OF LINER SHALL BE BUTTED FIRMLY TOGETHER

O RECTANGULAR SMOKE-FIRE DAMPER INSTALLATION DETAIL — NO SCALE

PROFESSIONAL ENGINEER REGISTERED P-18184 Feb 27, 2025 STATE OF IDAHO DAVID L. HANSEN

Engineered Systems Associates
1355 EAST CENTER
POCATELLO, IDAHO 83201
PHONE: (208) 233-0501
FAX: (208) 233-0529
EMAIL: esa@engsystems.com
ESA JOB NUMBER: 24048

02.28.25

DATE

AN ADDITION FOR:
TWIN FALLS COUNTY JAIL
2515 Wright Ave, Twin Falls, ID 83301
PHASE 1 PART B - MECHANICAL DETAILS

Laughlin Ricks Architecture
architecture/planning
134 3RD AVE. E. * Twin Falls, Idaho 83301
(208) 736-8050 Fax: (208) 733-0950

DATE: 02/28/2025
M JENSEN Drawn — D HANSEN Checked

M1B-3.1

DUCT CABLE BRACING SCHEDULE

DUCT SIZE (MAX)	*WT/ LIN FT. (MAX)	BOLT SIZE	HORIZONTAL ANGLE	VERTICAL ANGLE	CABLE DIA.**	CABLE DESIGN***	ANCHOR CONN. TYPE
12"	5#	3/8" @	2x2x16 GA	2x2x12 GA	1/8" @	7x19 GALV	I
18"	8#	3/8" @	2x2x16 GA	2-1/2x2-1/2x12 GA	1/8" @	7x19 GALV	I
24"	10#	3/8" @	2x2x16 GA	2-1/2x2-1/2x12 GA	1/8" @	7x19 GALV	I
30"	13#	3/8" @	2x2x16 GA	2-1/2x2-1/2x12 GA	1/8" @	7x19 GALV	I
42"	20#	3/8" @	2-1/2x2-1/2x16 GA	4x4x12 GA	3/16"@	7x19 GALV	II
54"	27#	3/8" @	2-1/2x2-1/2x16 GA	4x4x12 GA	3/16"@	7x19 GALV	II
60"	36#	3/8" @	3x3x16 GA	4x4x12 GA	3/16"@	7x19 GALV	II
84"	53#	3/8" @	4x4x14 GA	4x4x1/4	1/4" @	7x19 GALV	III
96"	80#	1/2" @	4x4x12 GA	5x3x1/4	5/16"@	7x19 GALV	IV

* MAXIMUM WEIGHT OF DUCTS OR COMBINATIONS OF DUCTS PER LINEAR FOOT. THE DUCTS MAX. DIM. SHALL GOVERN WHAT BRACING IS REQUIRED. FOR ANCHOR CONNECTIONS SEE SCHEDULE. SEE DUCT BRACING DETAILS.

** TWO CABLES REQUIRED AT EACH RESTRAINT POINT. EACH CABLE TO BE INSTALLED 45° TO HORIZONTAL AND 45° TO LONGITUDINAL DIRECTION OF DUCT.

*** CABLE SYSTEMS TO BE EQUAL TO AMBER BOOTH C/W THIMBLES, CLAMPS AND GROMMETS.

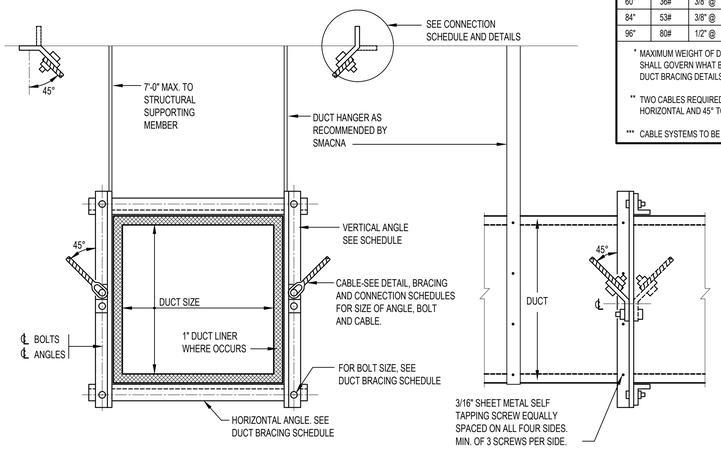

A | CABEL BRACING FOR RECTANGULAR DUCTS — NO SCALE

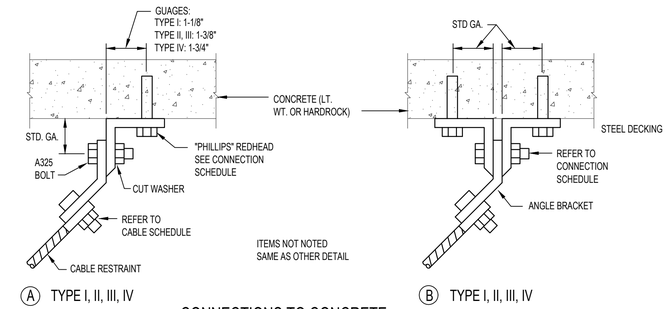

Ⓐ TYPE I, II, III, IV — Ⓑ TYPE I, II, III, IV

CONNECTIONS TO CONCRETE

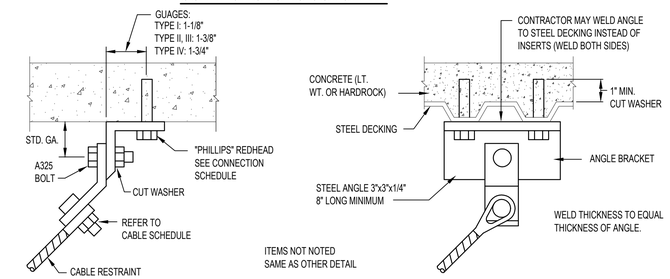

Ⓐ TYPE I, II, III, IV — CONNECTIONS TO STEEL — Ⓑ TYPE I, II, III, IV

SCHEDULE FOR TYPICAL CONNECTIONS FOR STRUCTURAL SUPPORTING MEMBERS

TYPE	MAX. LOAD CAPACITY (POUNDS)	PHILLIP'S REDHEAD ANCHORS TO CONCRETE		CONCRETE CAST-IN PLACE INSERT	BOLT OF ST. BM. CLAMP
		LT. WT.	HARD ROCK		
I	500	3/8"	3/8"	3/8"	3/8"
II	100	3/8"	3/8"	1/2"	3/8"
III	1500	3/8"	3/8"	1/2"	3/8"
IV	2000	1/2"	1/2"	5/8"	1/2"
V	3000	2-1/2"	2-1/2"	2-1/2"	5/8"
VI	4000	2-5/8"	2-5/8"	2-5/8"	5/8"

TYPE	SPEADER SIZE	BOLT THRU WOOD	SPAN-CRETE ROD	ANGLE TO SUPPORTING STRUCTURAL MEMBER	ROD SIZE FOR PIPES
I	C4x5.4	1/2"	3/8"	3x2x1/4" x 0'-3" LLH	1/2"
II	C5x6.7	3/4"	3/8"	3-1/2x2-1/2x5/16" x 0'-3" LLH	1/2"
III	C6x8.5	***	1/2"	3-1/2x2-1/2x5/16 x 0'-4" LLH	5/8"
IV	C8x11.5	***	1/2"	5x3x1/2" x 0'-4" LLH	3/4"
V	C9x13.4	***		(2) 3-1/2x2-1/2x7/16" x 0'-4"	7/8"*
VI	C10x15.3			(2) 5x3x1/2" x 0'-4"	7/8"**

1. FOR SLABS LESS THAN 5" THICK ONLY. THIN SLAB INSERTS MAY BE USED.
* 2. FOR USE WITH CONCRETE CAST-IN PLACE INSERTS OR PHILLIPS REDHEAD IN HARD ROCK ONLY.
** 3. FOR USE WITH CONCRETE CAST-IN PLACE INSERTS ONLY.
*** 4. WHERE TYPE III CONNECTIONS ARE REQUIRED FOR WOOD SYSTEMS, TYPE II CONNECTIONS SHALL BE USED WITH REDUCED RESTRAINT SPACING TO 20' O.C. WHERE TYPE IV CONNECTIONS ARE REQUIRED FOR WOOD SYSTEMS, TYPE II CONNECTIONS SHALL BE USED WITH REDUCED RESTRAINT SPACING TO 15' O.C. WHERE TYPE V CONNECTIONS ARE REQUIRED FOR WOOD SYSTEMS, TYPE II CONNECTIONS SHALL BE USED WITH REDUCED RESTRAINT SPACING TO 10' O.C.
5. THE MECHANICAL CONTRACTOR SHALL SUBMIT SHOP DRAWINGS TO THE STRUCTURAL ENGINEER AND THEN TO THE MECHANICAL ENGINEER, SHOWING CONNECTION TYPE AND LOCATION OF ALL RESTRAINT CONNECTIONS TO THE STRUCTURE.
6. FOR ESSENTIAL FACILITIES WHERE CONCRETE ANCHOR BOLTS OF THE "REDHEAD" EXPANSION TYPE ARE LOADED IN PULL OUT, 50% OF THE BOLTS (ALTERNATE BOLTS IN ANY GROUP ARRANGMENT) SHALL BE PROOF TESTED TO TWICE THE ALLOWABLE LOAD. IF THERE ARE FAILURES, THE IMMEDIATELY ADJACENT BOLTS MUST THE ALSO BE TESTED.
7. "HILTI" AND "RAMSET" ANCHORS ARE EQUAL SUBSTITUTES FOR THE "REDHEAD".

B | RESTRAIN CONNECTION DETAILS — NO SCALE

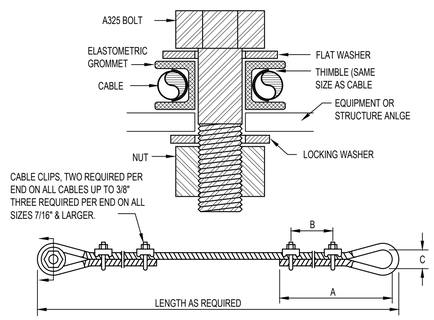

NOTES:
1. CABLE, THIMBLES, CLIPS, GROMMETS & FLAT WASHERS ARE TO BE FURNISHED BY RESTRAINT MANUFACTURER. ALL OTHER HARDWARE TO BE PROVIDED BY CONTR.
2. ENTIRE SYSTEM TO BE EQUAL TO AMBER BOOTH.
3. CABLE CLIPS MUST BE ORIENTED AS SHOWN WITH SHORT END OF CABLE ON THE CURVED PART OF THE CLIP.

CABLE SCHEDULE

CABLE DIA.	CABLE DESIGN	A	B	C	BOLT SIZE	ALLOWABLE LOAD (lbf)	BREAKING STRENGTH (lbf)
1/8"	7x19 GALV.	5-1/4"	1-5/8"	5/8"	3/8"	660	2000
3/16"	7x19 GALV.	5-3/4"	1-7/8"	5/8"	3/8"	1400	4200
1/4"	7x19 GALV.	6-3/4"	2-3/8"	11/16"	3/8"	2330	7000
5/16"	7x19 GALV.	7-3/8"	2-5/8"	13/16"	5/8"	3260	9800
3/8"	7x19 GALV.	8-7/8"	3-1/4"	1"	5/8"	4800	14400
7/16"	6x19 GALV.	17"	3-5/8"	1"	5/8"	5920	17800
1/2"	6x19 GALV.	18"	3-7/8"	1-1/8"	3/4"	7660	23000

C | CABLE RESTRAINT DETAIL — NO SCALE

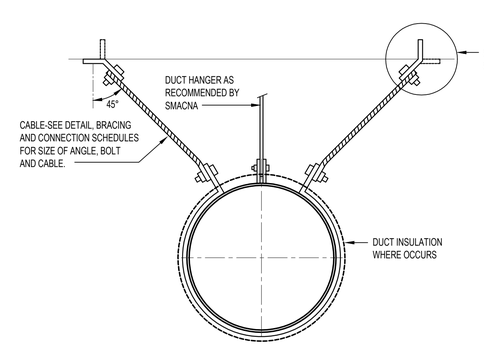

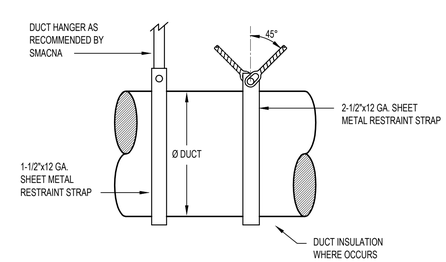

DUCT BRACING GENERAL NOTES

1. DETAILS SHOWN PROVIDE GENERAL GUIDELINES FOR A LATERAL BRACING SYSTEM. A TYPICAL VERTICAL SUPPORT SYSTEM MUST ALSO BE USED.
2. BRACE ALL RECTANGULAR DUCTS 3 SQ. FT. OF AREA AND LARGER. BRACE ALL ROUND DUCTS 12" IN DIAMETER AND LARGER.
3. CABLE RESTRAINTS AND BRACING NOT TO EXCEED 30'-0" CENTERS AND SHALL BE PROVIDED AT EACH TURN, AT THE END OF EACH DUCT RUN, AND ON EACH SIDE OF FLEXIBLE CONNECTIONS. BRACE POINTS SHALL NOT EXCEED 15'-0" FROM FLEXIBLE CONNECTION.
4. WHEN COMBINING DUCT GROUPS ON COMMON BRACING SYSTEMS, USE WEIGHTS AND DIMENSIONS FROM BRACING SCHEDULE.
5. ALL HOLES IN ANGLES ARE TO BE 1/16 INCH OVERSIZED. PLACE STANDARD CUT WASHERS BETWEEN SHEET METAL ANGLES AND NUT.
6. DUCTS NOT BRACED SHALL BE INSTALLED WITH A 6" MIN. CLEARANCE TO VERTICAL CEILING HANGER WIRES.
7. REHEAT BOXES AND OTHER ITEMS WHICH ATTACH TO THE DUCT SYSTEM SHALL BE BRACED INDEPENDENTLY OF THE DUCTS.
8. ALL SHEET METAL FOR BRACING TO BE FY = 33KSI MINIMUM. GAUGE FOR SHEET METAL BRACING SHALL BE AS FOLLOWS:

   16 GA = (0.0598 INCH)
   14 GA = (0.0747 INCH)
   12 GA = (0.1046 INCH)

9. MINIMUM DISTANCE FROM EDGE OF ANGLE TO BOLTS SHALL BE AS FOLLOWS:

   1/4" TO 1/2" @ = 1"
   5/8" @ = 1-1/8"
   3/4" @ = 1-1/4"
   7/8" @ = 1-1/2"

10. DO NOT FASTEN RESTRAINT SYSTEM TO TWO DISSIMILAR PARTS OF A BUILDING THAT MAY RESPOND IN A DIFFERENT MODE DURING AN EARTHQUAKE. FOR EXAMPLE A WALL AND A ROOF.
11. ALTERNATE EVERY OTHER CABLE RESTRAINT IN OPPOSITE DIRECTION (SHOWN DOTTED).

F | CABLE BRACING FOR ROUND DUCTS — NO SCALE

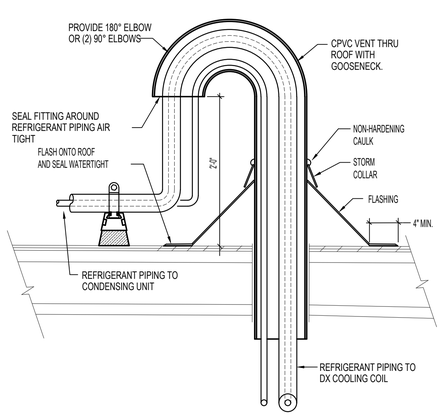

D | PIPING THRU ROOF DETAIL — NO SCALE

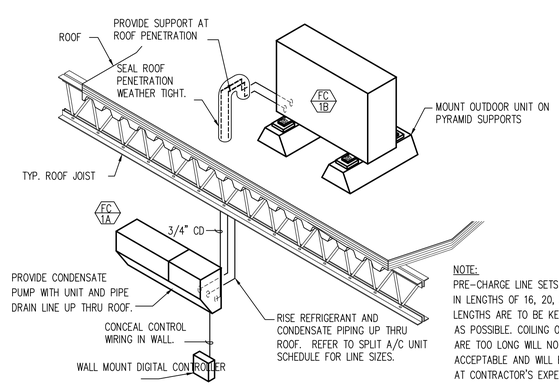

NOTE:
PRE-CHARGE LINE SETS ARE AVAILABLE IN LENGTHS OF 16, 20, 32 AND 49 FEET. LENGTHS ARE TO BE KEPT AS SHORT AS POSSIBLE. COILING OF LINES THAT ARE TOO LONG WILL NOT BE ACCEPTABLE AND WILL BE REPLACED AT CONTRACTOR'S EXPENSE.

E | FAN COIL & REFRIGERANT PIPING DETAIL — NO SCALE

PROFESSIONAL ENGINEER REGISTERED 18184 Feb 27, 2025 STATE OF IDAHO DAVID L. HANSEN

Engineered Systems Associates
1355 EAST CENTER
POCATELLO, IDAHO 83201
PHONE: (208) 233-0501
FAX: (208) 233-0529
EMAIL: esa@engsystems.com
ESA JOB NUMBER: 24048

02.28.25

DATE

AN ADDITION FOR:
TWIN FALLS COUNTY JAIL
2515 Wright Ave, Twin Falls, ID 83301
PHASE 1 PART B - SEISMIC RESTRAINT DETAILS

Laughlin Ricks Architecture
architecture/planning
134 3RD AVE. E. * Twin Falls, Idaho 83301
(208) 736-8050 Fax: (208) 733-0950

DATE: 02/28/2025
M JENSEN Drawn — D HANSEN Checked

M1B-3.2

EXHAUST FAN SCHEDULE

SYM.	TYPE	C.F.M.	S.P.E.	WATTS	CHAR.	R.P.M.	SONES	CONTROL	REMARKS	NOTES
EF 1	CEILING MOUNTED	120	.25"	87	120/60/1	640	< 2	WITH LIGHTS	TWIN CITY MODEL T150LP COMPLETE WITH BACK-DRAFT DAMPER.	1, 2
EF 2	CEILING MOUNTED	90	.25"	87	120/60/1	640	< 2	WITH LIGHTS	TWIN CITY MODEL T100 COMPLETE WITH BACK-DRAFT DAMPER.	1, 2
EF 3	CEILING MOUNTED	90	.25"	87	120/60/1	640	< 2	WITH LIGHTS	TWIN CITY MODEL T100 COMPLETE WITH BACK-DRAFT DAMPER.	1, 2
EF 4	CEILING MOUNTED	100	.25"	8.4	120/60/1	940	< 3	WITH LIGHTS	TWIN CITY MODEL T110E COMPLETE WITH BACK-DRAFT DAMPER.	1, 2
EF 5	CEILING MOUNTED	90	.25"	87	120/60/1	640	< 2	WALL TIMER SWITCH	TWIN CITY MODEL T100 COMPLETE WITH BACK-DRAFT DAMPER.	1, 2
EF 6	ROOF MOUNTED	120	.25"	1/8 HP	120/60/1	1350	< 4.5	WALL TIMER SWITCH	TWIN CITY MODEL 060BE-DCRD COMPLETE WITH BACK-DRAFT DAMPER.	4
EF 7	ROOF MOUNTED	---	---	---	---	---	---	---	SEE NOTES - REFER TO KITCHEN EQUIPMENT DRAWINGS.	3, 4
EF 8	ROOF MOUNTED	---	---	---	---	---	---	---	SEE NOTES - REFER TO KITCHEN EQUIPMENT DRAWINGS.	3, 4
EF 9	CEILING MOUNTED	100	.25"	8.4	120/60/1	940	< 3	WALL TIMER SWITCH	TWIN CITY MODEL T110E COMPLETE WITH BACK-DRAFT DAMPER.	1, 2
EF 10	ROOF MOUNTED	6800	.25"	1/2 HP	120/60/1	520	< 12.5	SMOKE EVAC W/ MANUAL OVERRIDE	TWIN CITY MODEL 300B-BRCU COMPLETE WITH BACK-DRAFT DAMPER.	4, 5
EF 11	ROOF MOUNTED	4000	.25"	1/2 HP	120/60/1	695	< 12.5	SMOKE EVAC W/ MANUAL OVERRIDE	TWIN CITY MODEL 210B-BRCU COMPLETE WITH BACK-DRAFT DAMPER.	4, 5
EF 12	ROOF MOUNTED	4000	.25"	1/2 HP	120/60/1	695	< 12.5	SMOKE EVAC W/ MANUAL OVERRIDE	TWIN CITY MODEL 210B-BRCU COMPLETE WITH BACK-DRAFT DAMPER.	4, 5
EF 13	ROOF MOUNTED	4000	.25"	1/2 HP	120/60/1	695	< 12.5	SMOKE EVAC W/ MANUAL OVERRIDE	TWIN CITY MODEL 210B-BRCU COMPLETE WITH BACK-DRAFT DAMPER.	4, 5
EF 14	CEILING MOUNTED	90	.25"	87	120/60/1	640	< 2	WITH LIGHTS	TWIN CITY MODEL T100 COMPLETE WITH BACK-DRAFT DAMPER.	1
EF 15	ROOF MOUNTED	210	.38"	1/6 HP	120/60/1	1150	< 7	CONTINUOUS	TWIN CITY MODEL 085BE-DCRD COMPLETE WITH BACK-DRAFT DAMPER.	4
EF 16	ROOF MOUNTED	150	.38"	1/6 HP	120/60/1	1650	< 7	CONTINUOUS	TWIN CITY MODEL 060BE-DCRD COMPLETE WITH BACK-DRAFT DAMPER.	4
EF 17	ROOF MOUNTED	300	.38"	1/6 HP	120/60/1	1350	< 7	CONTINUOUS	TWIN CITY MODEL 085BE-DCRD COMPLETE WITH BACK-DRAFT DAMPER.	4
EF 18	ROOF MOUNTED	120	.25"	1/8 HP	120/60/1	1350	< 4.5	COOLING STAT	TWIN CITY MODEL 060BE-DCRD COMPLETE WITH BACK-DRAFT DAMPER.	4

1- CEILING FANS TO BE COMPLETE WITH CEILING GRILLE. COORDINATE ACTUAL LOCATION WITH LIGHT FIXTURES AND BUILDING STRUCTURE.
2- RISE 6'Ø EXHAUST DUCT UP FROM CEILING FAN AND EXTEND THRU ROOF. TERMINATE WITH TWIN CITY MODEL 611 ROOF CAP WITH BIRDSCREEN.
3- KITCHEN HOOD EXHAUST FAN FURNISHED BY KITCHEN EQUIPMENT CONTRACTOR AND INSTALLED BY MECHANICAL CONTRACTOR. MOUNT ON MINIMUM 14" HIGH ROOF CURB AND CONNECT DUCTWORK TO HOOD AS REQUIRED. REFER TO KITCHEN EQUIPMENT DRAWINGS FOR DUCT SIZES AND CONNECTIONS.
4- ROOF MOUNTED EXHAUST FAN TO BE ON MINIMUM 14" HIGH ROOF CURB. COORDINATE ACTUAL LOCATION WITH BUILDING STRUCTURE TO DROP DUCT DOWN BETWEEN JOISTS.
5- ROOF MOUNTED EXHAUST FAN TO BE INTERLOCKED WITH FIRE ALARM SYSTEM TO OPERATE IN EMERGENCY SITUATIONS AS SMOKE EVACUATION FROM SPACE. PROVIDE MANUAL OVERRIDE SWITCH IN CONTROL ROOM.

KITCHEN HOOD UNIT SCHEDULE (FOR INFORMATION ONLY)

SYM.	LENGTH	WIDTH	HEIGHT	TYPE	EXH CFM	FAN SYM	MAKE-UP CFM	HEATER SYM	EXIT DUCT	FIRE SYST.	LIGHTS	CHAR	GREASE EXTRACTION	WEIGHT
KH 1	(2) 16'-0"	5'-0"	2'-0"	WALL MOUNTED	6400	EF 7	6400	MA 1	(4) 12"Ø	YES	YES	208/60/3	YES	3644 #
KH 2	8'-0"	3'-6"	2'-0"	WALL MOUNTED	1400	EF 8	---	---	14"Ø	NO	NO	120/60/1	NO	310 #

1- KITCHEN HOOD EXHAUST FAN FURNISHED AND INSTALLED BY KITCHEN EQUIPMENT CONTRACTOR. REFER TO KITCHEN EQUIPMENT DRAWINGS.

UNIT HEATER SCHEDULE

SYM.	TYPE	CFM	H.P.	CHAR.	MCOP	A.G.A. INPUT	A.G.A. OUTPUT	EAT	LAT	GAS SIZE	FUEL TYPE	FLUE	WEIGHT	MODEL NUMBER	NOTES
UH 1	HORIZ. SEPARATED COMBUSTION	450	1/50	120/60/1	15	30,000	24,600	45°F	95°F	1/2"	NAT.	4"Ø	75#	REZNOR MODEL UDXC-TSL, SIZE 30	1, 2
UH 2	HORIZ. SEPARATED COMBUSTION	625	1/30	120/60/1	15	45,000	37,350	45°F	100°F	1/2"	NAT.	4"Ø	75#	REZNOR MODEL UDXC-TSL, SIZE 45	1, 3
UH 3	HORIZ. SEPARATED COMBUSTION	625	1/30	120/60/1	15	45,000	37,350	45°F	100°F	1/2"	NAT.	4"Ø	75#	REZNOR MODEL UDXC-TSL, SIZE 45	1, 3

1- SUPPORT UNIT HEATER FROM STRUCTURE ABOVE. RISE (2) 4"Ø VENTS UP THRU ROOF. PROVIDE CONCENTRIC FITTING JUST BELOW ROOF AND WEATHER CAP AT TERMINATION OF VENT.
2- MOUNT THERMOSTAT ON UNIT.
3- MOUNT THERMOSTAT ON WALL BELOW UNIT.

ELECTRIC HEATER SCHEDULE

SYM.	TYPE	BTU	KW	CHAR	CONTROL	REMARKS	NOTES
EH 1	RECESSED MOUNTED	6824	2	208/60/1	INTEGRAL	QMARK MODEL 4408F WITH SM-1 RECESSED MOUNTED FRAME	1
EH 2	RECESSED MOUNTED	6824	2	208/60/1	INTEGRAL	QMARK MODEL 4408F WITH SM-1 RECESSED MOUNTED FRAME	1
EH 3	RECESSED MOUNTED	6824	2	208/60/1	INTEGRAL	QMARK MODEL 4408F WITH SM-1 RECESSED MOUNTED FRAME	1
EH 4	RECESSED MOUNTED	6824	2	208/60/1	INTEGRAL	QMARK MODEL 4408F WITH SM-1 RECESSED MOUNTED FRAME	1

1- ELECTRIC WALL HEATER TO MOUNTED RECESSED IN WALL AT 8" ABOVE FLOOR. MAINTAIN CLEARANCES FOR ADA AND EGRESS AS REQUIRED BY CODE.

MAKE-UP AIR UNIT SCHEDULE

SYM.	TYPE	CFM	SP_s	HP	CHAR	RPM	MCA	MCOP	HEATING SECTION MBH	HEATING SECTION EWT	HEATING SECTION T.R.	HEATING SECTION GAS SIZE	COOLING SECTION EAT DB	COOLING SECTION LAT DB	COOLING SECTION GPM	REMARKS	NOTES
MA 1	DIRECT FIRED	6400	0.5"	10	480/60/3	1499	36.0	60	587,325	0°F	100°F	1"	92°F	73°F	5.63	SEE NOTES - REFER TO KITCHEN EQUIPMENT DRAWINGS.	1

1- KITCHEN HOOD MAKE-UP AIR UNIT FURNISHED BY KITCHEN EQUIPMENT CONTRACTOR AND INSTALLED BY MECHANICAL CONTRACTOR. MOUNT ON MINIMUM 14" HIGH ROOF CURB AND CONNECT DUCTWORK TO HOOD AS REQUIRED. REFER TO KITCHEN EQUIPMENT DRAWINGS FOR DUCT SIZES AND CONNECTIONS.

ROOF TOP HEATING & AIR CONDITIONING UNIT SCHEDULE

SYM.	CFM	SP_s	BLOWER H.P.	CHAR	MCA	MCOP	WEIGHT	GAS CONN	HEATING BTU IN	HEATING BTU OUT	HEATING EAT	HEATING LAT	COOLING MBH	COOLING EAT	COOLING LAT	MODEL NUMBER	NOTES
RT 1	1200	.75"	1/2	480/60/3	11	15	800#	1/2"	110,000	93,000	45°F	105°F	36	95°F	55°F	CARRIER 48FCEA04	1, 2, 3, 4, 7
RT 2	4000	.75"	2-1/2	480/60/3	29	35	1400#	3/4"	250,000	200,000	45°F	91°F	120	95°F	55°F	CARRIER 48TCTM12C	1, 2, 3, 4, 5, 7
RT 3	1950	.75"	1-1/2	480/60/3	14	20	1000#	3/4"	150,000	120,000	45°F	115°F	60	95°F	55°F	CARRIER 48FCMA06	1, 2, 3, 4, 7
RT 4	1950	.75"	1-1/2	480/60/3	14	20	1000#	3/4"	150,000	120,000	45°F	115°F	60	95°F	55°F	CARRIER 48FCMA06	1, 2, 3, 4, 7
RT 5	3000	.75"	2-1/2	480/60/3	29	35	1400#	3/4"	250,000	200,000	45°F	115°F	120	95°F	55°F	CARRIER 48TCTM12C	1, 2, 3, 4, 5, 7
RT 6	6800	.75"	5	480/60/3	34	40	1700#	3/4"	250,000	200,000	45°F	92°F	150	95°F	55°F	CARRIER 48TCFD14	1, 2, 3, 4, 5, 7
RT 7	7200	.75"	5	480/60/3	34	40	2000#	3/4"	250,000	200,000	45°F	91°F	150	95°F	55°F	CARRIER 48TCFD14	1, 2, 3, 4, 5, 7
RT 8	3600	.75"	2-1/2	480/60/3	29	35	1400#	3/4"	250,000	200,000	45°F	115°F	120	95°F	55°F	CARRIER 48TCTM12C	1, 2, 3, 4, 5, 7
RT 9	1100	.75"	1/2	480/60/3	11	15	800#	1/2"	110,000	93,000	45°F	105°F	36	95°F	55°F	CARRIER 48FCEA04	1, 2, 3, 4, 7, 8
RT 10	1000	.75"	1/2	480/60/3	11	15	800#	1/2"	110,000	93,000	45°F	105°F	36	95°F	55°F	CARRIER 48FCEA04	1, 2, 3, 4, 7
RT 11	3100	.75"	1-1/2	480/60/3	48.8	50	1400#	3/4"	400,000	298,000	10°F	110°F	142	95°F	55°F	CARRIER 62X212FKJC	1, 2, 3, 4, 5, 6, 7

1- ROOF TOP UNIT HAVE MINIMUM 14.0 SEER RATING, AND BE COMPLETE WITH FULL ECONOMIZER, BAROMETRIC RELIEF DAMPER AND POWERED EXHAUST. PROVIDE HAIL GUARDS ON COILS.
2- ROOF TOP UNIT TO BE SUPPLIED WITH R454B REFRIGERANT, INTEGRATED DISCONNECT AND FACTORY INSTALL CONVENIENCE OUTLET
3- MOUNT ROOF TOP UNIT ON 14" HIGH (MINIMUM) ROOF CURB WITH DUCTWORK DOWN THRU ROOF. CURB TO MATCH ROOF SLOPE. (FIELD VERIFY)
4- ROOF TOP UNIT TO COME WITH IVU SYSTEM INTEGRATION AND BE CONNECTED TO OWNER'S EXISTING CONTROL PROGRAM. (FIELD VERIFY)
5- ROOF TOP UNIT TO COME WITH SUPPLY DUCT SMOKE DETECTOR, STAINLESS STEEL HEAT EXCHANGER, AND SINGLE CIRCUIT - TWO STAGE COOLING.
6- DOAS ROOF TOP UNIT TO BE COMPLETE WITH HEAT RECOVERY WHEEL, POWER EXHAUST, AND NON-FUSED DISCONNECT. (R454B REFRIGERANT)
7- PROVIDE ISOLATION CURB FOR ROOF TOP UNIT. NO ISOLATION ON FAN.
8- ROOF TOP UNIT TO HAVE POWER EXHAUST SET TO MINIMUM 120 CFM AND TO RUN CONTINUOUSLY.

GRILLE AND REGISTER SCHEDULE

SYM.	SIZE	THROW	CFM	CONSTR.	FINISH	BRANCH DUCT	F.D.	O.B.	REMARKS	NOTES
D-1	9 x 9		50-199	STEEL	WHITE	8"Ø	NO	NO	PRICE MODEL SMD WITH BEVELED FRAME	1, 2
D-2	9 x 9		50-199	STEEL	WHITE	8"Ø	NO	NO	PRICE MODEL SMD WITH 24x24 LAY-IN MODULE	1, 2
D-3	9 x 9		50-199	STEEL	WHITE	8"Ø	NO	NO	PRICE MODEL SMD WITH 24x24 LAY-IN MODULE	1, 2
D-4	12 x 12		200-399	STEEL	WHITE	10"Ø	NO	NO	PRICE MODEL SMD WITH 24x24 LAY-IN MODULE	1, 2
D-5	15 x 15		400-549	STEEL	WHITE	12"Ø	NO	NO	PRICE MODEL SMD WITH 24x24 LAY-IN MODULE	1, 2
D-6	15 x 15		400-549	STEEL	WHITE	12"Ø	NO	YES	PRICE MODEL SMD WITH BEVELED FRAME	1, 2
D-7	6 x 6	6 FT	50-150	STEEL	WHITE	6"Ø	NO	NO	PRICE MODEL MSPG WITH PERFORATED FACE	2, 3
D-8	12 x 12		200-399	STEEL	WHITE	10"Ø	NO	YES	PRICE MODEL MSPG WITH PERFORATED FACE	2, 3
D-9	16 x 16		600-680	STEEL	WHITE	14"Ø	NO	YES	PRICE MODEL SMCD MODULAR CORE DIFFUSER WITH BEVELED FRAME	1, 2,6
D-10	12 x 12		200-399	STEEL	WHITE	10"Ø	NO	YES	PRICE MODEL SMD WITH BEVELED FRAME	1, 2
S-1	10 x 6	N.A.	50-350	STEEL	WHITE	IN 10x8 DUCT	NO	YES	PRICE MODEL 520	2, 5
R-1	12 x 12	N.A.	50-399	STEEL	WHITE	12 x 8	NO	NO	PRICE MODEL 535 WITH 24x24 LAY-IN MODULE	1, 2
R-2	22 x 22	N.A.	400-1200	STEEL	WHITE	18 x 12	NO	NO	PRICE MODEL 535 WITH 24x24 LAY-IN MODULE	1, 2
R-3	24 x 24	N.A.	900-1200	STEEL	WHITE	20 x 14	NO	NO	PRICE MODEL 535	1, 2
R-4	6 x 6	N.A.	50-150	STEEL	WHITE	8"Ø	NO	NO	PRICE MODEL MSPG WITH PERFORATED FACE	2, 3
R-5	10 x 6	N.A.	50-350	STEEL	WHITE	IN 10x8 DUCT	NO	NO	PRICE MODEL 535	2, 5
E-1	12 x 12	N.A.	50-399	STEEL	WHITE	10 x 10	NO	NO	PRICE MODEL 535 WITH 24x24 LAY-IN MODULE	1, 2
E-2	24 x 24	N.A.	---	ALUM	WHITE	24 x 24	NO	NO	PRICE MODEL 80FAB12	1
E-3	34 x 34	N.A.	---	ALUM	WHITE	34 x 34	NO	NO	PRICE MODEL 80FAB12	1

1- REFER TO ARCHITECTURAL REFLECTED CEILING PLAN FOR EXACT PLACEMENT OF CEILING GRILLES AND REGISTERS.
2- MAXIMUM N.C. OF ALL GRILLES AND REGISTERS NOT TO EXCEED 25.
3- MOUNT GRILLE IN WALL. SUPPLY GRILLE TO BE NEAR CEILING AND RETURN GRILLE TO BE NEAR FLOOR.
4- MOUNT ROUNDED GRILLES IN DUCT AT 45 DEGREES BELOW HORIZONTAL.
5- GRILLE TO HAVE BLADES PARALLEL TO LONG DIMENSION. MOUNT IN HORIZONTAL POSITION.
6- ALIGN DIFFUSER TO BLOW PARALLEL WITH DIRECTION OF CONCRETE TEES

FAN COIL SPLIT SYSTEM A/C UNIT SCHEDULE

INDOOR UNIT SYM.	CFM	BTU	CHAR	MCA		OUTDOOR UNIT SYM.	BTU	MCA	SEER	CHAR	MANUFACTURER	REFRIG. LINES LIQUID	REFRIG. LINES SUCTION
FC 1A	635-750	30,000	208/60/1	1	MITSUBISHI MODEL PKA-A30HA7	FC 1B	30,000	25	15.3	208/60/1	MITSUBISHI PUZA30NHA7 (HEAT PUMP) WITH LOW AMBIENT 'HARD-START' KIT	3/8"	5/8"

1- FIELD VERIFY ACTUAL LENGTHS OF REFRIGERANT PIPING TO BE INSTALLED AND SIZE PIPING ACCORDING TO MANUFACTURER'S INSTRUCTIONS
2- SYSTEM TO BE PROVIDED WITH CURRENT REFRIGERANT (R32 OR R545B).
3- SYSTEM TO BE SUPPLIED WITH LOW AMBIENT (HARD-START) KIT.
4- MOUNT UNIT ON 14" HIGH (MINIMUM) ROOF CURB AND DROP PIPING DOWN THRU CURB WITH CPVC 180 DEGREE GOOSENECK PIPE.

PROFESSIONAL ENGINEER REGISTERED 18184 Feb 27, 2025 STATE OF IDAHO DAVID L. HANSEN

Engineered Systems Associates
1355 EAST CENTER
POCATELLO, IDAHO 83201
PHONE: (208) 233-0501
FAX: (208) 233-0529
EMAIL: esa@engsystems.com
ESA JOB NUMBER: 24048

02.28.25

DATE	

AN ADDITION FOR:
TWIN FALLS COUNTY JAIL
2515 Wright Ave, Twin Falls, ID 83301
PHASE 1 PART B - MECHANICAL SCHEDULES AND LEGEND

Laughlin Ricks Architecture
architecture/planning
134 3RD AVE. E. * Twin Falls, Idaho 83301
(208) 736-8050 Fax: (208) 733-0950

DATE: 02/28/2025
M JENSEN Drawn
D HANSEN Checked

M1B-3.3

LIGHTING SYMBOL SCHEDULE

NOTE: ALL SYMBOLS MAY NOT BE USED

SYMBOL	DESCRIPTION
F1	LIGHT FIXTURE TYPE DESIGNATION
	PARKING AREA POLE LIGHT, SINGLE OR DOUBLE HEAD AS INDICATED ON DRAWINGS. REFER TO LIGHT POLE DETAIL FOR POLE INFORMATION.
	EXTERIOR WALL MOUNTED FIXTURE
	2X4 FLUORESCENT OR LED FIXTURE
	2X2 FLUORESCENT OR LED FIXTURE
	SURFACE MOUNTED FLUORESCENT OR LED FIXTURE
	STRIP FLUORESCENT OR LED FIXTURE
	WALL MOUNTED FLUORESCENT OR LED FIXTURE
	ROUND RECESSED FIXTURE
	SURFACE OR PENDANT FIXTURE
	EXIT SIGN, WALL OR CEILING MOUNTING AS REQUIRED (SINGLE OR DOUBLE FACE) DIRECTIONAL CHEVRONS AS INDICATED; CONNECT TO EMERGENCY GENERATOR CIRCUIT.
	WALL OR CEILING MOUNTED EMERGENCY LIGHTING UNIT W/BATTERY PACK CONNECT TO UNSWITCHED LEG OF LIGHTING CIRCUIT THAT IS IN THE SAME AREA AS THE EMERGENCY LIGHT.
	SHADED FIXTURE INDICATES AN EMERGENCY FIXTURE. PROVIDE WITH EMERG. BATTERY PACK OR CONNECT TO EMERGENCY POWER SYSTEM (WHERE APPLICABLE). CONNECT BATTERY PACK TO UNSWITCHED LEG OF LIGHTING CIRCUIT THAT SERVES THE SAME AREA AS THE EMERGENCY FIXTURE. PROVIDE WITH TEST LIGHT AND SWITCH.
S ###	CEILING MOUNTED OCCUPANCY SENSOR, REFER TO OCCUPANCY SENSOR/SWITCH SCHEDULE FOR SENSOR TYPE AND ADDITIONAL INFORMATION.
S ###	SWITCH MOUNTED OCCUPANCY SENSOR, LOW VOLTAGE SWITCHPOD OR DIMMER SWITCH, REFER TO OCCUPANCY SENSOR/SWITCH SCHEDULE FOR TYPE AND ADDITIONAL INFORMATION.
$	SINGLE-POLE SWITCH (SEE SUB-SCRIPTS BELOW FOR ADDITIONAL INFORMATION)

LIGHT FIXTURE SUBSCRIPTS

NL NIGHT-LIGHT(CONNECT TO UNSWITCHED LEG OF CIRCUIT)

SWITCH SUBSCRIPTS

3 3-WAY SWITCH
4 4-WAY SWITCH
D DIMMER SWITCH (COMPATIBLE W/ LOAD & LTG TYPES)
F 7-DAY PROGRAMMABLE TIMER SWITCH (INTERMATIC MODEL EI500WC SERIES)
P PILOT LIGHTED SWITCH
LV LOW-VOLTAGE SWITCH (PER DWG'S)
T THERMAL-OVERLOAD SWITCH
M SWITCH SUPPLIED WITH EQUIPMENT, INSTALLED BY E.C.
WP WEATHERPROOF
2P DOUBLE POLE, SINGLE THROW SWITCH

GENERAL LIGHTING NOTES:

A. SYMBOLS SHOWN ABOVE MAY NOT REPRESENT ALL LIGHT FIXTURES USED ON PROJECT, REFER TO LIGHT FIXTURE SCHEDULE FOR ACTUAL FIXTURE INFORMATION INCLUDING FIXTURE TYPE, LAMPING, MOUNTING AND ETC.
B. JUNCTION BOXES FOR LIGHTING CIRCUITING ARE NOT SHOWN FOR CLARITY. THE E.C. IS RESPONSIBLE FOR PROVIDING AND INSTALLING ALL JUNCTION BOXES REQUIRED FOR CIRCUITING OF ALL LIGHT FIXTURES THAT ARE NOT LISTED FOR "THROUGH-BRANCH CIRCUIT WIRING".
C. IN GENERAL ALL SWITCH-LEG CONDUCTORS MAY NOT BE SHOWN ON DRAWINGS; E.C. SHALL PROVIDE AND INSTALL CONDUCTORS AS REQUIRED TO ACHIEVE CONTROL SCHEMES INDICATED AND DESCRIBED ON DRAWINGS. INCLUDING ALL 0 - 10V DIMMING CONTROLS BETWEEN SWITCH AND FIXTURES.
D. ALL BATTERY EXIT SIGNS AND EMERGENCY LIGHTING TO BE CONNECTED TO THE UNSWITCHED LEG OF THE LIGHTING CIRCUIT IN THE AREA.

POWER SYMBOL SCHEDULE

NOTE: ALL SYMBOLS MAY NOT BE USED

SYMBOL	DESCRIPTION
'MSB'	ELECTRICAL SWITCHBOARD EQUIPMENT, (SEE POWER RISER AND PANEL SCHEDULES FOR ADDITIONAL INFORMATION)
'T##'	DRY-TYPE TRANSFORMER, (SEE POWER RISER FOR ADDITIONAL INFORMATION)
'LA'	ELECTRICAL PANELBOARD, (SEE POWER RISER AND PANEL SCHEDULES FOR ADDITIONAL INFORMATION)
	DISCONNECT SWITCH, SIZE/POLES/TYPE AS INDICATED TYPES: 1=NEMA 1, 3R=NEMA 3R, 4X=NEMA 4X
	FUSED DISCONNECT SWITCH, SIZE/POLES/TYPE AS INDICATED TYPES: 1=NEMA 1, 3R=NEMA 3R, 4X=NEMA 4X
	COMBINATION STARTER & FUSED DISCONNECT SWITCH, SIZE/POLES/TYPE AS INDICATED. TYPES: 1=NEMA 1, 3R=NEMA 3R, 4X=NEMA 4X
J	JUNCTION BOX CR = CORD REEL; SEE DRAWINGS FOR INFORMATION CD = CORD DROP; SEE DRAWINGS FOR INFORMATION
	EQUIPMENT CONNECTION; COORDINATE CONNECTION WITH EQUIPMENT PRIOR TO ROUGH-IN
M	MOTOR CONNECTION
F	EXHAUST FAN CONNECTION
	POWER AND/OR DATA SERVICE POLE
FB#	FLOORBOX (SEE FLOORBOX SCHEDULE FOR ADDITIONAL INFORMATION)
	PUSHBUTTON STATION
	SPECIAL RECEPTACLE (COORDINATE NEMA TYPE WITH EQUIP.) (REFER TO PANEL SCHEDULES FOR AMPS)
	CEILING MOUNTED DUPLEX RECEPTACLE (COORDINATE PLACEMENT WITH CEILING EQUIPMENT PRIOR TO ROUGH-IN)
	DUPLEX RECEPTACLE, UL TAMPER-RESISTANT WHERE MOUNTED BELOW 5FT
	GFCI-TYPE DUPLEX RECEPTACLE, UL TAMPER-RESISTANT WHERE MOUNTED BELOW 5FT
	SPLIT-WIRED RECEPTACLE, HALF OF RECEPT. SHALL BE SWITCHED OTHER HALF SHALL HAVE CONSTANT POWER.
	DOUBLE-DUPLEX RECEPTACLE, UL TAMPER-RESISTANT WHERE MOUNTED BELOW 5FT
	GFCI-TYPE DOUBLE-DUPLEX RECEPTACLE, UL TAMPER-RESISTANT WHERE MOUNTED BELOW 5FT.

RECEPTACLE AND EQUIPMENT SUBSCRIPTS

AC ABOVE COUNTER
WP WEATHERPROOF (UL LISTED WEATHER-RESISTANT)
42" MOUNTING HEIGHT AFF OR AFG
REF REFRIGERATOR
M MICROWAVE
M/R MICROWAVE/RANGE HOOD (LOCATE ABOVE RANGE)
USB DUPLEX RECPT. WITH (2) USB CHARGING PORTS
DW DISHWASHER, INSTALL PER NEC 422.16(B)(2)
D/DW DISPOSAL/DISHWASHER, INSTALL PER NEC 422.16(B)(2)
TV RECEPT. DEDICATED TO TV; FIELD VERIFY HEIGHT W/ TV PRIOR TO ROUGH-IN.
EWC ELECTRIC WATER COOLER; PROVIDE GFCI PROTECTION PER NEC 422.5(A)
E "RED" RECEPTACLE CONNECTED TO EMERG. POWER SYSTEM.
D CLOTHES DRYER (NEMA 14-30R)
R ELECTRIC RANGE (NEMA 14-50R)
W WELDER RECEPTACLE 208/240V - NEMA 6-50R

T OR S — HVAC THERMOSTAT OR SENSOR; PROVIDE & INSTALL BACKBOX,3/4" CONDUIT AND CONDUCTORS TO ASSOCIATED HVAC UNIT. COORDINATE EXACT LOCATION & SIZE AND NUMBER OF CONDUCTORS WITH M.C.

GENERAL SPECIAL SYSTEM NOTES:

A. ALL DEVICES SHOWN AT OR NEAR MILLWORK/CASEWORK SHALL BE COORDINATED WITH THE ARCHITECTURAL ELEVATION DRAWINGS AND MILLWORK INSTALLER TO INSURE PROPER MOUNTING HEIGHTS. CONTRACTOR SHALL ADJUST DEVICES AS NECESSARY IN ORDER TO POSITION DEVICES SUCH THAT THEY WILL NOT FALL BEHIND MILLWORK. CABINETS OR BE DIRECTLY ABOVE SINKS OR MIDWAY BETWEEN TILEWORK/WALL OR WAINSCOATING, ETC.
B. IT SHALL BE THE RESPONSIBILITY OF THE CONTRACTOR TO INSTALL A GFCI TYPE RECEPTACLE FOR ALL RECPTACLES SHOWN IN TOILET RMS, BATHROOMS, KITCHENS/SERVING AREAS, ROOFTOP, OUTDOORS OR WITHIN 6FT OF ANY SINK, BASIN, TUB OR FLOOR SINK AND ALL OTHER AREAS DEFINED BY THE NEC.

SPECIAL SYSTEMS SYMBOL SCHEDULE

NOTE: ALL SYMBOLS MAY NOT BE USED

SYMBOL	DESCRIPTION
D-X	DATA OUTLET; _= # OF DATA CABLES, X=CONDUIT SIZE (SEE NOTES 1,2,3 BELOW)
WAP D-X	WIRELESS ACCESS POINT, PROVIDE AND INSTALLED BY E.C. _= # OF DATA CABLES, X=CONDUIT SIZE (SEE NOTES 1,2,3 BELOW) UBIQUITI NETWORKS U6-ENTERPRISE OR EQUAL
_T-X	TELEPHONE OUTLET; _= # OF TELEPHONE CABLES, X=CONDUIT SIZE (SEE NOTES 1,2,3 BELOW)
_T/_D-X	TELEPHONE/DATA OUTLET; _= # OF TELEPHONE/DATA CABLES, X=CONDUIT SIZE (SEE NOTES 1,2,3 BELOW)
FB# _D-X	ELECTRICAL FLOORBOX REFER TO "ELECTRICAL FLOORBOX SCHEDULE" FOR INFORMATION. _= # OF DATA CABLES, X=CONDUIT SIZE (SEE NOTES 1,2,3 BELOW)
### _D-X	TV AND/OR AV BOX; WITH POWER, DATA AND/OR AV CONNECTIVITY ### = BOX ID. REFER TO "ELECTRICAL AV/TV BOX SCHEDULE" FOR INFORMATION. _= # OF DATA CABLES, X=CONDUIT SIZE (SEE NOTE #2 BELOW) INSTALL CONDUIT (SIZE AS INDICATED) FROM BOX TO NEAREST ACCESSIBLE CEILING SPACE W/ DATA CABLING/TERMINATIONS AS INDICATED ON DRAWINGS.
WALL (qty) ###– FLOOR (qty) ⊗ ###	WALL/FLOOR ELECTRICAL PATHWAY SLEEVE; INSTALL THROUGH WALL OR FLOOR AS INDICATED. SLEEVES SHALL BE ABOVE ACCESSIBLE CEILINGS IN ACCESSIBLE LOCATION, FIELD VERIFY EXACT LOCATION TO AVOID CONFLICT WITH OTHER TRADES AND UTILITIES. IF WALL/FLOOR IS NOT FIRE RATED E.C. MAY UTILIZED EMT CONDUIT SLEEVES OF EQUAL SIZE. REFER TO ARCHITECTURAL DRAWINGS FOR FIRE RATINGS. (qty) = QUANTITY OF SLEEVES AT LOCATION EP2 = 2" HILTI SPEED SLEEVE CP-653-BA EP4 = 4" HILTI SPEED SLEEVE CP-653-BA

SPECIAL SYSTEMS NOTES:

1. UTILIZE 4 11/16" DEEP BOX WITH REQUIRED MUDRING AND CONDUIT TO ABOVE NEAREST ACCESSIBLE CEILING OR DATA RACK, TERMINATE WITH INSULATED THROAT BUSHING. PROVIDE QTY OF CABLES INDICATED FROM OUTLET TO NEAREST TELE/DATA ROOM. SEE DWGS FOR ADDITIONAL INFORMATION. UTILIZE J-HOOKS 3FT ON CENTER FOR SUPPORT OF CABLING WHERE CABLE TRAY IS NOT INSTALLED/SPECIFIED.
2. CONDUIT SIZE ('X' FROM ABOVE); 2=1/2", 3=3/4", 4=1", 5=1-1/4", 6=1-1/2"
3. BLANK (NO LABEL) = 4-11/16" DEEP BOX WITH REQUIRED MUDRING AND 1" CONDUIT TO ABOVE NEAREST ACCESSIBLE CEILING/CABLE TRAY, TERMINATE WITH INSULATED THROAT BUSHING, PROVIDE PULL STRING. (UNLESS OTHERWISE NOTED)

GENERAL SPECIAL SYSTEM NOTES:

A. COMMUNICATIONS CABLES SHALL HAVE BENDS NO GREATER THAN 90 DEG.
B. CONDUITS FOR COMMUNICATIONS CABLING SHALL HAVE A MAXIMUM BEND RADIUS NOT MORE THAN 10X THE DIAMETER OF THE CONDUIT.
C. ALL COMMUNICATIONS CONDUITS SHALL BE TERMINATED WITH AN INSULATED NON-METALLIC BUSHING AT BOTH ENDS.
D. COMMUNICATIONS CONDUITS SHALL HAVE NO MORE THAN (2) 90'S WITHOUT A PULLBOX. PULL BOXES SHALL BE LOCATED IN ACCESSIBLE LOCATIONS AND SHALL BE SIZED AT LEASED 12X THE LARGEST CONDUIT DIAMETER IN LENGTH AND MIN. 4" DEEP AND 8" WIDE.
E. IT SHALL BE THE RESPONSIBILITY OF THE E.C. TO INSURE THAT THE PATHWAY FOR THE DATA CABLING DOES NOT CREATE CABLE LENGTHS TO EXCEEDS THE LENGTH OF 295FT FROM OUTLET TO PATCH PANEL, THIS INCLUDES SERVICE LOOPS AND PATCH CORDS.
F. WHERE CABLE TRAY IS UTILIZED IN THE PROJECT. COMMUNICATION CONDUITS ENDING AT THE CABLE TRAY SHALL EXTEND 1" OVER THE SIDE INTO THE TRAY.

FIRE ALARM SYMBOL SCHEDULE

NOTE: ALL SYMBOLS MAY NOT BE USED

SYMBOL	DESCRIPTION
FACP	FIRE ALARM CONTROL PANEL (WALL MOUNTED, TOP AT 6'-0' AFF)
NAC	NOTIFICATION DEVICE EXTENDER PANEL. PROVIDE QTY AS REQUIRED BASED ON DEVICE VOLTAGE DROP CALC'S PER NFPA 72 REQUIREMENTS. (WALL MOUNTED, TOP AT 5'-0' AFF)
RA	REMOTE ANNUCIATOR PANEL (FLUSH MOUNTED IN WALL AT 5'-0' AFF)
F	MANUAL PULL STATION (MOUNTING HEIGHT PER ADA & NFPA 72)
H	MAGNETIC DOOR HOLD OPEN
CM	ADDRESSABLE CONTROL/RELAY MODULE
MM	ADDRESSABLE MONITORING MODULE
FS	FIRE ALARM FLOW SWITCH
TS	FIRE ALARM TAMPER SWITCH
SD	FIRE ALARM SMOKE DAMPER
#	ADDRESSABLE DETECTOR WITH BASE
	DETECTOR SUBSCRIPTS P PHOTOELECTRIC SMOKE DETECTOR — D DUCT SMOKE DETECTOR ID IN-DUCT SMOKE DETECTOR — H HEAT DETECTOR M MULTI-STATION SMOKE DETECTOR (120V W/BATTERY BACKUP) M/S MULTI-STATION SMOKE DETECTOR W/VISIBLE STROBE (120V W/BATTERY BACKUP) M/C MULTI-STATION SMOKE / CARBON MONOXIDE DETECTOR (120V W/BATTERY BACKUP)
SD	FIRE/SMOKE DAMPER; COORDINATE LOCATIONS WITH MECH. DRAWINGS
	EXTERIOR 120V FIRE BELL, INSTALL NEXT TO FDC.
	WALL OR CEILING MOUNTED FIRE ALARM HORN ONLY
	WALL MOUNTED FIRE ALARM STROBE OR HORN/STROBE PROVIDE CANDELA RATING AS REQUIRED BY NFPA 72
	CEILING MOUNTED FIRE ALARM STROBE OR HORN/STROBE PROVIDE CANDELA RATING AS REQUIRED BY NFPA 72

GENERAL FIRE ALARM SYSTEM NOTES

A. DO NOT INSTALL MORE THAN (10) NOTIFICATION APPLIANCES ON ANY SINGLE CLASS "B" SIGNAL CIRCUIT. DO NOT EXCEED 400 FT. OF NO. 14 WIRE IN THE TOTAL LOOP.
B. NFPA ALLOWS NOTIFICATION APPLIANCES TO BE MOUNTED AT A HEIGHT RANGE BETWEEN 80" TO 96" ABOVE FINISH FLOOR. THE PREFERRED HEIGHT IS 80". IF THIS CONFLICTS WITH OTHER TRADES OR ROOM FURNISHINGS, LOCATE AS CLOSE TO 80" AS POSSIBLE, NOT EXCEEDING 96". ALL NOTIFICATION APPLIANCES IN A COMMON ROOM OR LINE OF SIGHT SHALL BE LOCATED AT A COMMON HEIGHT.
C. MOUNT PULL STATIONS AT 46-48" A.F.F. TO THE OPERATING HANDLE TO MEET ADA REQUIREMENTS.
D. DO NOT CONNECT THE FIRE ALARM SYSTEM TO ANY DEVICE WHICH HAS A POWER HELD CONTACTS (FLOW, TAMPER, HOOD SYSTEM, DUCT DETECTOR, ETC. FALSE ALARM WILL OCCUR.
E. ELECTRICAL CONTRACTOR SHALL SUPPLY AND INSTALL CONDUCTOR QUANTITIES PER FIRE ALARM SYSTEM SUPPLIER, AND AS PER NFPA AND NEC REQUIREMENTS.
F. DO NOT INSTALL ANY SMOKE OR HEAT DETECTORS WITHIN 3 FEET OF ANY AIR DIFFUSER.
G. DO NOT EXCEED 2500 FEET ON ANY ADDRESSABLE DEVICE RUN. DO NOT EXCEED 120 DEVICES ON ANY ONE ADDRESSABLE DEVICE RUN.
H. ALL AIR HANDLING EQUIPMENT 2000 CFM OR MORE MUST BE SHUT DOWN UPON FIRE ALARM AS PER LIFE SAFETY CODES.
I. ALL CLASS "B" INITIATING CIRCUITS WITH ADDRESSABLE DEVICES NEED EOLR. (END OF LINE RESISTORS).
J. IN CORRIDORS, NOTIFICATION APPLIANCES MUST BE LOCATED WITHIN 15' FROM ENDS OF CORRIDORS AND A MAXIMUM OF 100' SPACING.
K. NOTIFICATION APPLIANCES TO BE SYNCHRONIZED TO PROVIDE A 3-3-3 TEMPORAL PATTERN.
L. ALL WIRING AND CONDUIT ROUTING TO BE AS DESCRIBED ON SUPPLIED SHOP DRAWINGS. FIRE ALARM PLAN IS SHOWN FOR GENERAL LOCATION AND LAYOUT ONLY.
M. THE FIRE ALARM SYSTEM TO BE IN COMPLIANCE WITH ALL APPLICABLE LOCAL, STATE AND ADA REQUIREMENTS.
N. ELECT. CONTR. TO CONNECT SPRINKLER SYSTEM TAMPER SWITCHES AND FLOW VALVES TO FIRE ALARM SYSTEM AS REQUIRED. SEE FIRE SPRINKLER SYSTEM DRAWINGS FOR EXACT LOCATIONS AND QUANTITIES.

ABBREVIATIONS

P	SINGLE POLE
1PH	SINGLE-PHASE
2/C	TWO-CONDUCTOR
3/C	THREE-CONDUCTOR
3P	THREE POLE
3PH	THREE-PHASE
3W	THREE-WIRE
4W	FOUR-WIRE
AC	ABOVE COUNTER
ADA	AMERICANS WITH DISABILITIES ACT
AFF	ABOVE FINISHED FLOOR
AFG	ABOVE FINISHED GRADE
AIC	AMPERE INTERRUPTING CAPACITY
AL	ALUMINUM
A or	AMPERE
AMP	ANNUNCIATOR
ANN	ACCESS POINT
AP	(WIRELESS DATA)
ATS	AUTOMATIC TRANSFER SWITCH
AV	AUDIO VISUAL
AWG	AMERICAN WIRE GAGE
BFG	BELOW FINISHED GRADE
C	CEILING MOUNTED
CATV	CABLE TELEVISION
CB	CIRCUIT BREAKER
CCTV	CLOSED CIRCUIT TELEVISION
CKT	CIRCUIT
C	CONDUIT
CP	CONTROL PANEL
CT	CURRENT TRANSFORMER
CU	COPPER
DS	DISCONNECT SWITCH
EA	EACH
E.C.	ELECTRICAL CONTRACTOR
EM	EMERGENCY
EMT	ELECTRICAL METALLIC TUBING
ENT	ELECTRICAL NONMETALLIC TUBING
EPO	EMERGENCY POWER OFF
EQUIP	EQUIPMENT
EX	EXISTING
FA	FIRE ALARM
FACP	FIRE ALARM CONTROL PANEL
FLA	FULL LOAD AMPS
FMC	FLEXIBLE METAL CONDUIT
GND	GROUND
G.C.	GENERAL CONTRACTOR
GEN	GENERATOR
GFI	GROUND FAULT CIRCUIT INTERRUPTER
GFP	GROUND FAULT PROTECTION
HD	HEAVY DUTY
HID	HIGH INTENSITY DISCHARGE
HOA	HAND-OFF-AUTOMATIC
HP	HORSE POWER
HPS	HIGH PRESSURE SODIUM
HV	HIGH VOLTAGE
HZ	HERTZ
IG	ISOLATED GROUND
IMC	INTERMEDIATE METAL CONDUIT
J-BOX	JUNCTION BOX
V	KILOVOLT
KVA	KILOVOLT AMPERE
kW	KILOWATT
kWh	KILOWATT HOUR
LED	LIGHT EMITTING DIODE
LFMC	LIQUID TIGHT FLEXIBLE METAL CONDUIT
LFNC	LIQUID TIGHT FLEXIBLE NONMETALLIC CONDUIT
LTG	LIGHTING
LV	LOW VOLTAGE
MAX	MAXIMUM
M.C.	MECH. CONTRACTOR
MCA	MINIMUM CIRCUIT AMPS
MCB	MAIN CIRCUIT BREAKER
MCC	MOTOR CONTROL CENTER
MDP	MAIN DISTRIBUTION PANEL
MH	MANHOLE
MIN	MINIMUM
MLO	MAIN LUGS ONLY
MOCP	MAXIMUM OVERCURRENT PROTECTION
NA	NOT APPLICABLE
NC	NORMALLY CLOSED
NEC	NATIONAL ELECTRICAL CODE
NEMA	NATIONAL ELECTRICAL MANUFACTURERS ASSOCIATION
NFPA	NATIONAL FIRE PROTECTION ASSOCIATION
NIC	NOT IN CONTRACT
NL	NIGHT LIGHT
NO	NORMALLY OPEN
NTS	NOT TO SCALE
OC	ON CENTER
OCP	OVERCURRENT PROTECTION SIZE
OL	OVERLOAD
PB	PUSHBUTTON
P	PHASE
PNL	PANEL
PT	POTENTIAL TRANSFORMER
PTZ	PAN/TILT/ZOOM
QTY	QUANTITY
RCP	REFLECTED CEILING PLAN
RMC	RIGID METAL CONDUIT
RNC	RIGID NONMETALLIC CONDUIT
SCA	SHORT CIRCUIT AMPS
SCBA	STANDARD COLOR BY ARCHITECT
SF	SQUARE FOOT (FEET)
SPD	SURGE PROTECTION DEVICE
SPEC	SPECIFICATION
SWBD	SWITCHBOARD
SWGR	SWITCHGEAR
TL	TWIST LOCK
TP	TWISTED PAIR
TTB	TELEPHONE TERMINAL BOARD
TV	TELEVISION
TYP	TYPICAL
UG	UNDERGROUND
UPS	UNINTERRUPTIBLE POWER SUPPLY
V	VOLTS
VA	VOLT AMPERE
V.I.F.	VERIFY IN FIELD
VFD	VARIABLE FREQUENCY DRIVE
WAP	WIRELESS ACCESS POINT
W/	WITH
W/O	WITHOUT
WP	WEATHERPROOF
XFMR	TRANSFORMER

CIRCUITING & GENERAL SYMBOL SCHEDULE

NOTE: ALL SYMBOLS MAY NOT BE USED

SYMBOL	DESCRIPTION
1	KEYED NOTE REFERENCE
1 / ES101	DETAIL # / SHEET REFERENCE
A-1,3,5 3/4"C.-6#12,1#12G	BRANCH CIRCUIT HOME-RUN TO PANEL INDICATED A-1,3,5 — PANEL AND CIRCUIT DESIGNATIONS 3/4"C.-6#12,1#12G QTY & SIZE OF EQUIPMENT GROUND CONDUCTOR QTY & SIZE OF NEUTRAL AND PHASE CONDUCTOR(S) SIZE OF CONDUIT
	TICK MARKS EQUIPMENT GROUNDING CONDUCTOR NEUTRAL CONDUCTOR(S) PHASE AND/OR SWITCH-LEG CONDUCTOR(S)
25,000A	CALCULATED AVAILABLE FAULT CURRENT AT EQUIPMENT(SEE POWER RISER)
	BRANCH CIRCUIT/FEEDER CONCEALED IN CEILING OR WALL
	BRANCH CIRCUIT/FEEDER CONCEALED UNDERGROUND OR FLOOR
	NEW EQUIPMENT, DEVICES, ETC.
	EXISTING EQUIPMENT, DEVICES, ETC.
	DEMOLITION EQUIPMENT, DEVICES, ETC.

PROJECT GENERAL NOTES:

A. E.C. SHALL REFER TO THE MECHANICAL DRAWINGS FOR EXACT LOCATIONS OF ALL MECHANICAL EQUIPMENT AND ELECTRICAL CONNECTIONS.
B. E.C. SHALL PROVIDE MINIMUM WORKING CLEARANCE AS PER NEC BEFORE INSTALLING ANY ELECTRICAL PANELS OR CABINETS. SEE ELECTRICAL EQUIPMENT CLEARANCE DETAIL.
C. INSTALL ALL LIGHT FIXTURES IN MECHANICAL ROOM AFTER THE MECHANICAL EQUIPMENT IS IN PLACE. ADJUST AS NECESSARY. PROVIDE CHAIN SUSPENSION KITS AS REQUIRED.
D. REFER TO ARCHITECTURAL REFLECTED CEILING PLAN(S) FOR EXACT FIXTURE LOCATIONS, CEILING TYPES, ETC.
E. E.C. SHALL PROVIDE ALL CONCRETE PADS AS REQUIRED FOR ALL ELECTRICAL EQUIPMENT.
F. CONFIRM EXACT LOCATIONS OF ALL TELEPHONE/DATA OUTLETS WITH OWNER PRIOR TO ROUGH-IN.
G. LOCATE SWITCHES, OUTLETS, ETC., SHOWN AT ROOM ENTRY DOORWAYS, AS CLOSE TO DOOR FRAME AS POSSIBLE, SO AS NOT RO INTERFERE WITH ROOM CABINETS, ETC.
H. SUPPORT ALL LIGHT FIXTURES INDEPENDENT OF CEILING.
I. ELECTRICAL CONTRACTOR SHALL OBTAIN ALL APPLICABLE PERMITS FOR WORK AND PAY ASSOCIATED FEES.
J. MAINTAIN 24" MIN. CLEARANCE FROM ALL COMMUNICATIONS CABLING AND ELECTRONIC BALLASTS.
K. UNLESS SPECIFICALLY INDICATED OTHERWISE, E.C. SHALL COORDINATE WITH ANY SPECIAL SYSTEMS SUPPLIER/SHOP DRAWINGS; DENTAL, MEDICAL, KITCHEN, SPECIALIZED EQUIPMENT, ETC. FOR THE EXACT ROUGH-IN REQUIREMENTS FOR THEIR EQUIPMENT. ALSO UNLESS INDICATED OTHERWISE, THE E.C. TO BE RESPONSIBLE FOR FINAL ELECTRICAL CONNECTIONS TO ALL SPECIAL EQUIPMENT.
L. ALL CONDUIT/RACEWAY/CABLES TO BE CONCEALED IN WALLS OR ABOVE CEILINGS. IF ANY SURFACE WORK IS NECESSARY, IT SHALL BE APPROVED BY THE ARCHITECT/ENGINEER PRIOR TO INSTALLATION.
M. ELECTRICAL CONTRACTOR SHALL VISIT THE SITE PRIOR TO BID AND THOROUGHLY INVESTIGATE THE EXISTING CONDITIONS, AS THEY RELATE TO THE SCOPE OF WORK DESCRIBED. MAKE NECESSARY PROVISIONS IN THE BASE BID TO ADEQUATELY ACCOMMODATE THESE CONDITIONS.
N. DATA CABLING SYSTEM PRE-INSTALLATION CONFERENCE:
   1. E.C. SHALL SCHEDULE A MEETING A MINIMUM OF FIVE CALENDAR DAYS PRIOR TO BEGINNING DATA CABLING INSTALLATION . ATTENDEES SHOULD INCLUDE OWNER'S REP., ENGINEER, GC, EC AND CABLING SUB. REFER TO SECTION 26 6210(1.4)(E) FOR ADDITIONAL INFORMATION.

TYPICAL DEVICE MOUNTING HEIGHTS:

GENERAL DETAIL NOTES:

A. ALL MOUNTING HEIGHTS ARE TYPICAL UNLESS NOTED OTHERWISE
B. E.C. SHALL COORDINATE ALL DEVICES HEIGHTS WITH ARCHITECTS ELEVATION/MILLWORK DWGS. TO INSURE THAT OUTLETS WILL NOT FALL BEHIND CABINETS, BACKSPLASH OR INTERFERE WITH WAINSCOTING, ETC. AND REPORT ANY CONFLICTS TO ARCHITECT "PRIOR TO ROUGH-IN"
C. ALL SWITCHES SHALL BE MOUNTED AS CLOSE TO DOOR JAMS AS POSSIBLE, COORDINATE ALL DEVICE LOCATIONS WITH ARCHITECTURAL PLANS AND DETAILS
D. COORDINATE LIGHT SWITCH AND OUTLET HEIGHTS WITH ARCHITECTURAL WAINSCOTING AND/OR TILE WORK SO AS NOT TO FALL MIDWAY IN THESE FINISHES.

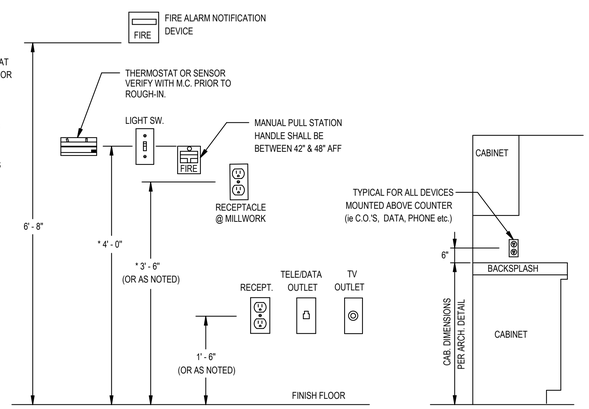

ELECTRICAL EQUIP. CLEARANCE

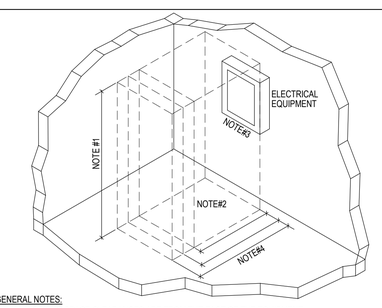

GENERAL NOTES:

A. ALL WORKING SPACE CLEARANCES ARE FROM THE FACE OF THE EQUIPMENT.

NOTES:

1. THE MINIMUM HEADROOM OF WORKING SPACE SHALL BE 6 1/2FT.
2. THE WIDTH OF THE WORKING SPACE SHALL BE THE WIDTH OF THE EQUIPMENT OR 30", WHICHEVER IS GREATER. THE PANEL DOOR SHALL OPEN AT LEAST 90 DEGREES.
3. ALL CIRCUIT BREAKERS, WHEN IN THIER HIGHEST POSITION, SHALL NOT BE MORE THAN 6FT 7 IN. ABOVE THE FINISHED FLOOR.
4. 3FT CLEARANCE IF 0-150V TO GROUND, 3.5FT CLEARANCE IF 151-600V TO GROUND. 4FT IF EXPOSED LIVE PARTS ON BOTH SIDES OF THE WORKING SPACE.

UTILITY LIGHTING REBATES & INCENTIVES:

IT SHALL BE THE RESPONSIBILITY OF THE ELECTRICAL CONTRACTOR TO PREPARE ALL REQUIRED APPLICATIONS AND INFORMATION REQUIRED TO PROVIDE THE OWNER WITH THE MAXIMUM AMOUNT OF REBATE DOLLARS FROM THE LOCAL UTILITY COMPANY. THE ELECTRICAL CONTRACTOR SHALL SUBMIT VERIFICATION OF THE UTILITY COMPANY PRE-APPLICATION APPROVAL PRIOR TO ORDERING ANY MATERIALS.

VISIT THE FOLLOWING UTILITY CO. WEBSITES FOR INFORMATION:

IDAHO POWER CO.
WWW.IDAHOPOWER.COM
CONTACT:
SHELLEY MARTIN (208) 388-5872
OR
DAN KUHL (503) 308-0233
dan.kuhl@evergreen-efficiency.com

PROFESSIONAL ENGINEER REGISTERED 13053 02/14/25 STATE OF IDAHO SHAWN A. MEADOR

PROJECT #: 2496

PAYNE Engineering Inc. Consulting Engineers
1823 E. Center
Pocatello, Idaho 83201
tel (208) 232-4439
www.paynenengineeringinc.com

DATE	REVISION
02/14/2025	ISSUED FOR PERMIT

PHASE 1 PART B FOR:
TWIN FALLS COUNTY - WRIGHT AVE JAIL
2515 Wright Ave, Twin Falls, ID 83301
ELECTRICAL SYMBOLS & DETAILS

Laughlin Ricks Architecture
architecture/planning
134 3RD AVE. E. * Twin Falls, Idaho 83301
PHONE: (208) 736-8050

DATE: 02/14/25
SAM Drawn — TEP Checked
#23029 PROJECT #

E1B-0.0

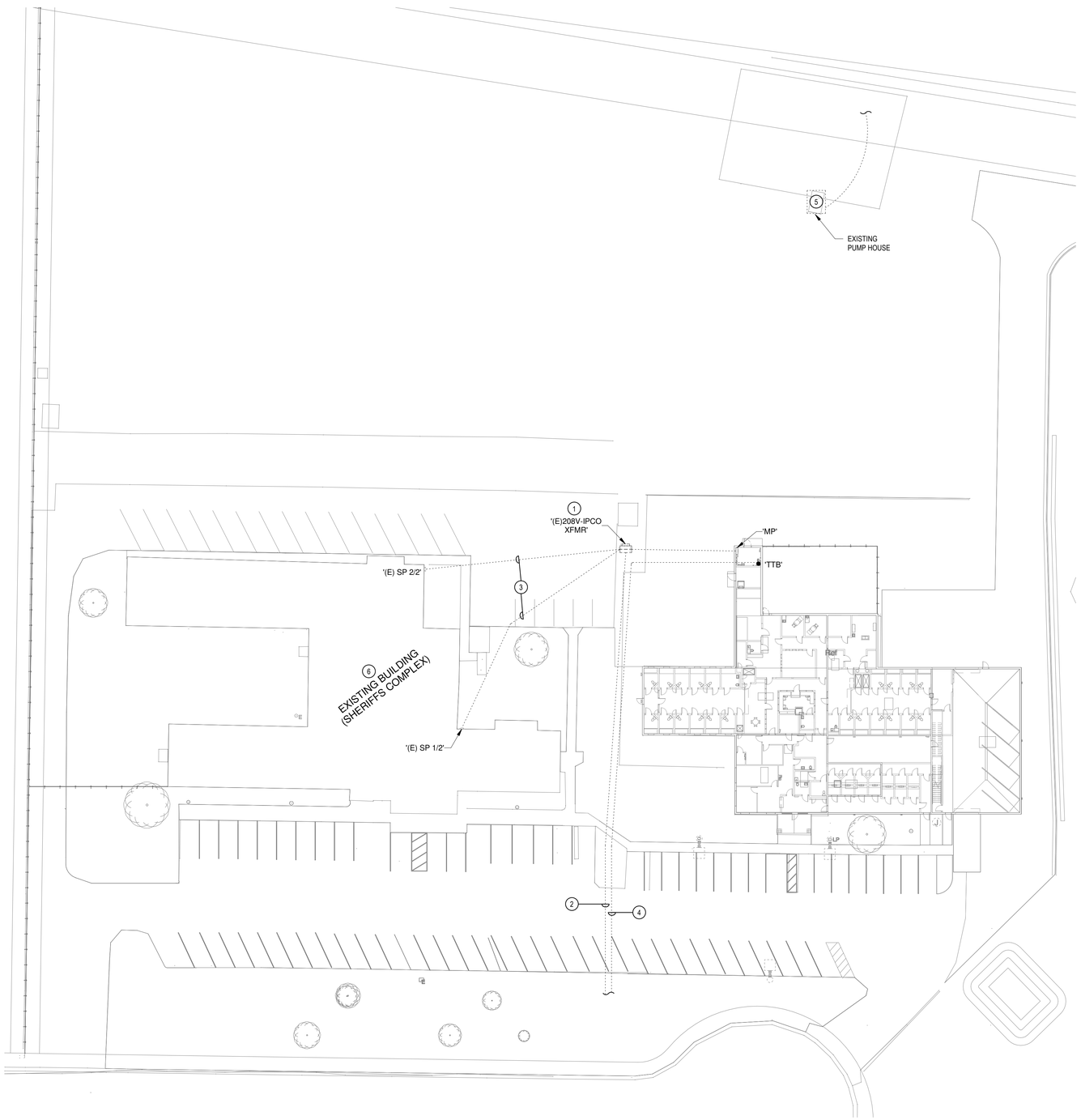

1 EXISTING ELECTRICAL SITE PLAN - PHASE 1B

SCALE: 1" = 30'-0"

GENERAL NOTES:

A. REFER TO SYMBOL SCHEDULE SHEET FOR PROJECT GENERAL NOTES AND GENERAL NOTES ASSOCIATED WITH THE INSTALLATION OF EACH SYSTEM, INCLUDINB BUT NOT LIMITED TO; LIGHTING, POWER, FIRE ALARM, SPECIAL SYSTEMS, ETC.

KEY NOTES:

1 EXISTING IPCO TRANSFORMER TO BE REMOVED/RELOCATED TO ACCOMMODATE NEW CONSTRUCTION. E.C. SHALL COORDINATE WITH IPCO FOR REMOVAL/RELOCATION.

2 EXISTING UNDERGROUND PRIMARY TO BE RELOCATED TO NEW TRANSFORMER(S) AS REQUIRED BY IPCO, E.C. SHALL COORDINATE WORK WITH IPCO.

3 EXISTING UNDERGROUND SECONDARY SERVICE(S) TO SHERIFFS COMPLEX TO BE RE-ROUTED/EXTENDED AS REQUIRED FOR RELOCATION OF THE IPCO TRANSFORMER. E.C. SHALL PROVIDE TEMPORARY POWER TO BUILDING AS REQUIRED TO KEEP BUILDING OPERATIONAL UNTIL NEW SERVICE(S) ARE ESTABLISHED AND ENERGIZED. COORDINATE DOWNTIME AND SWITCHOVER WITH OWNER. FOR BIDDING PURPOSES EACH SERVICE IS ASSUMED TO CONSIST OF (2) 3"C., EA. W/ 4#350 Cu, E.C. SHALL FIELD VERIFY EXACT ROUTING AND ACTUAL SERVICE FEEDER QTY/SIZES PRIOR TO ORDERING ANY MATERIALS.

4 APPROXIMATE LOCATION OF EXISTING UNDERGROUND TELE/COMM. SERVICE TO BUILDING TO BE RELOCATED/REROUTED AS REQUIRED TO ACCOMMODATE NEW CONSTRUCTION. E.C. SHALL COORDINATE RELOCATION WITH LOCAL TELE/COMM. SERVICE PROVIDER.

5 EXISTING PUMP HOUSE FED WITH DEDICATED IPCO SERVICE TO BE DEMOLISHED/RELOCATED BY OTHERS. E.C. SHALL COORDINATE WITH G.C. AND IPCO FOR REMOVAL OF EXISTING PUMP HOUSE SERVICE AND PROVIDING NEW SERVICE AT NEW PUMP HOUSE LOCATION.

6 THIS BUILDING IS TO REMAIN FUNCTIONAL AT ALL TIMES, E.C. IS RESPONSIBLE FOR PROVIDING AND MAINTAINING TEMPORARY POWER TO BUILDING AS REQUIRED DURING CONSTRUCTION AND TRANSFORMER RELOCATION. ALL DOWNTIMES FOR SWITCH-OVERS SHALL BE COORDINATED WITH OWNER 1-WEEK IN ADVANCE.

DATE	REVISION
02/14/2025	ISSUED FOR PERMIT

PHASE 1 PART B FOR:
TWIN FALLS COUNTY - WRIGHT AVE JAIL
2515 Wright Ave, Twin Falls, ID 83301
EXISTING ELECTRICAL SITE PLAN

Laughlin Ricks Architecture
architecture/planning
134 3RD AVE. E. * Twin Falls, Idaho 83301
PHONE: (208) 736-8050

PROFESSIONAL ENGINEER REGISTERED 13053 02/14/25 STATE OF IDAHO SHAWN A. MEADOR

PROJECT #: 2496

PAYNE Engineering Inc. Consulting Engineers
1823 E. Center
Pocatello, Idaho 83201
tel (208) 232-4439
www.payneengineeringinc.com

DATE: 02/14/25

SAM	TEP
Drawn	Checked

#23029
PROJECT #

E1B-0.1

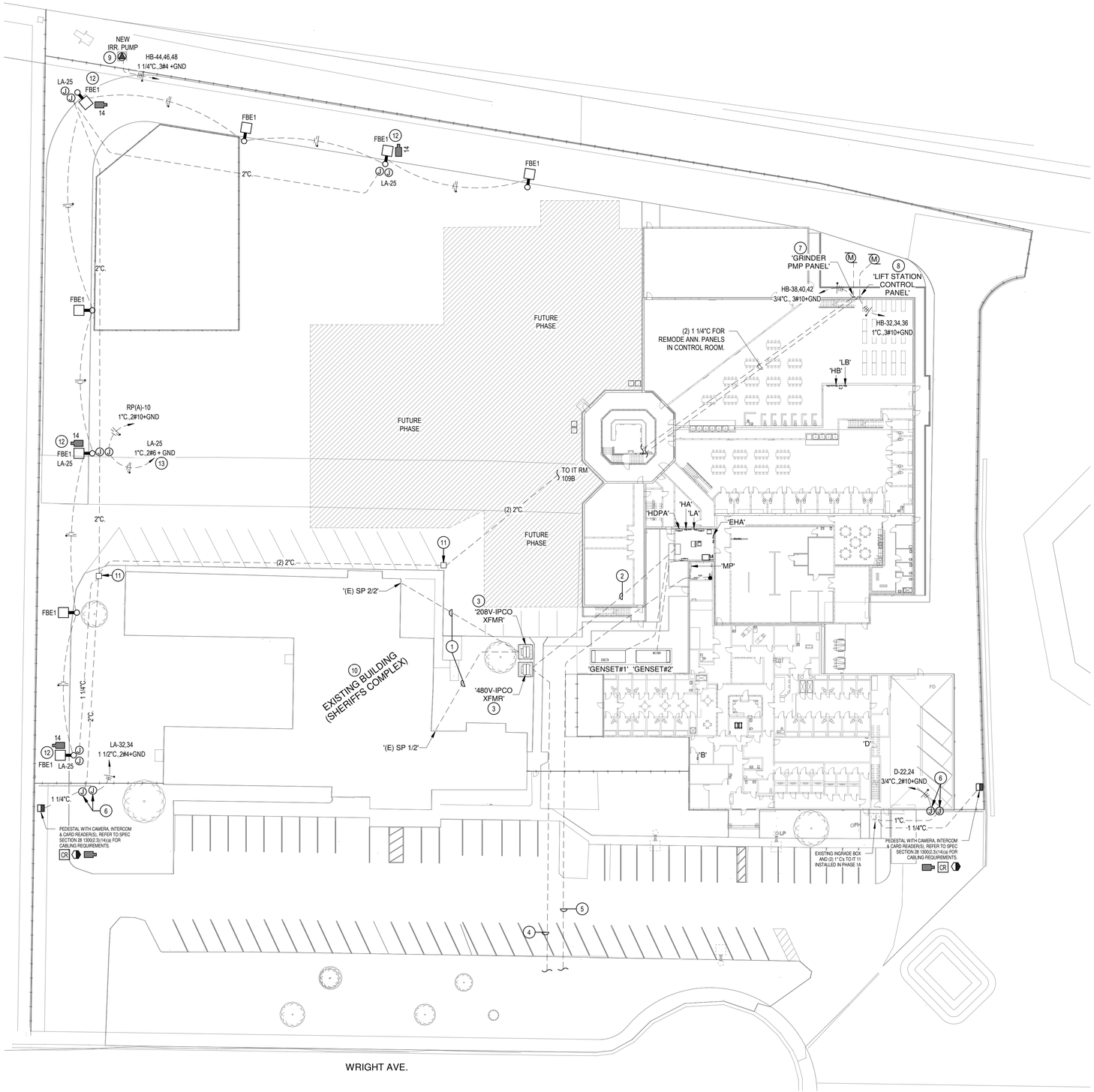

1 NEW ELECTRICAL SITE PLAN - PHASE 1B

SCALE: 1" = 30'-0"

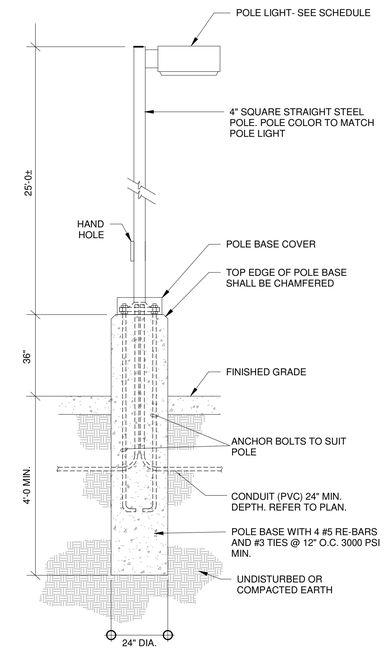

A POLE LIGHT W/36"BASE DETAIL

SCALE: NONE

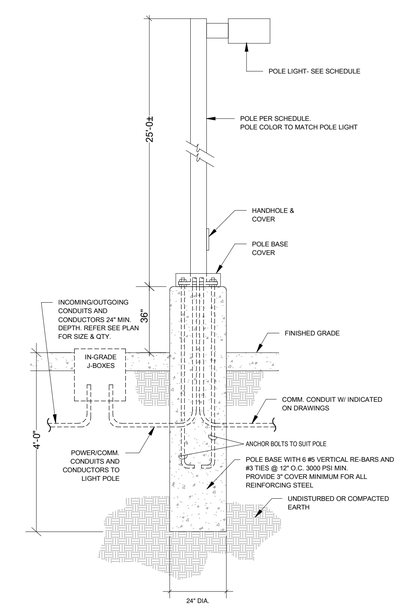

B POLE LIGHT W/ CAMERA DETAIL

SCALE: NONE

GENERAL NOTES:

A. THESE PLANS HAVE BEEN PREPARED WITHOUT UTILITY COMPANY COMMENTS. THE E.C. SHALL VERIFY THE EXACT REQUIREMENTS FOR THE ELECTRIC AND TELEPHONE SERVICES WITH THE UTILITY COMPANY REPRESENTATIVES AND PROVIDE ALL WORK AND PAY ALL COSTS FOR A COMPLETE AND OPERATING SYSTEM, AS DIRECTED BY THE GOVERNING UTILITIES.

B. ALL UNDERGROUND CONDUIT INSTALLATION SHALL BE PROVIDED WITH TRACER WIRES FOR FUTURE LOCATING.

KEY NOTES:

1 NEW/EXTENDED UNDERGROUND SECONDARY SERVICE(S) TO SHERIFFS COMPLEX FROM NEW IPCO TRANSFORMER. E.C. SHALL PROVIDE TEMPORARY POWER TO BUILDING AS REQUIRED TO KEEP BUILDING OPERATIONAL UNTIL NEW SERVICE(S) ARE ESTABLISHED AND ENERGIZED. COORDINATE DOWNTIME AND SWITCHOVER WITH OWNER. FOR BIDDING PURPOSES EACH SERVICE IS ASSUMED TO CONSIST OF (2) 3"C., EA. W/ 4#350 Cu, E.C. SHALL FIELD VERIFY EXACT ROUTING AND ACTUAL SERVICE FEEDER QTY/SIZES PRIOR TO ORDERING ANY MATERIALS.

2 NEW UNDERGROUND SECONDARY; SEE POWER RISER FOR ADDITIONAL INFORMATION.

3 NEW UTILITY COMPANY TRANSFORMER(S), PAD AND METER BY IDAHO POWER CO. SEE POWER RISER FOR ADDITIONAL INFORMATION. FIELD VERIFY EXACT PLACEMENT OF TRANSFORMER WITH IDAHO POWER COMPANY AND OWNER.

4 NEW/RELOCATED UNDERGROUND PRIMARY BY IDAHO POWER CO.

5 NEW/RELOCATED TELECOMMUNICATION SERVICE TO BUILDING AS DIRECTED BY TELE/COMM. SERVICE PROVIDER & OWNER.

6 MOTORIZED GATE TO BE POWERED AND CONTROLLED BY NEW JAIL BUILDING. E.C. SHALL PROVIDE LOW VOLTAGE CONDUIT/CONDUCTORS BETWEEN GATE AND NEAREST IT ROOM FOR CAMERA, CONTROL AND INTERCOM. PROVIDE SEPARATE POWER CONDUIT/CONDUCTORS TO PANEL INDICATED. FIELD COORDINATE EXACT CONNECTION REQUIREMENTS AND LOCATIONS WITH OWNER AND GATE INSTALLER PRIOR TO ROUGH-IN. PROVIDE AND INSTALL IN-GRADE PULLBOXES AS REQUIRE FOR PULLING OF CONDUCTORS, BOXES SHALL BE TRAFFIC RATED IF INSTALLED IN DRIVEWAY OR PARKING AREAS.

7 SEWER MUFFIN GRINDER PUMP, CONTROL PANEL AND REMOTE ANN. PANEL (BY G.C.). E.C. SHALL PROVIDE ALL CONDUIT, CONDUCTORS & CONNECTIONS BETWEEN PANELS AND PUMP VAULT AND PROVIDE CONDUIT/CONDUCTORS FROM MAIN CONTROL PANEL TO ANNUNCIATOR PANEL IN CONTROL ROOM AS REQUIRED BY PUMP MANUFACTURER. VERIFY REQUIREMENTS WITH PUMP INSTALLER AND SHOP DRAWINGS PRIOR TO ROUGH-IN. UTILIZE CONDUIT SEAL-OFFS FOR ALL CONDUITS ENTERING/EXITING SEWER VAULT PER NEC. REFER TO CIVIL DRAWINGS FOR ADDITIONAL INFORMATION.

8 SEWER LIFT STATION, CONTROL PANEL AND REMOTE ANN. PANEL (BY G.C.). E.C. SHALL PROVIDE ALL CONDUIT, CONDUCTORS & CONNECTIONS BETWEEN PANELS AND PUMP VAULT AND PROVIDE CONDUIT/CONDUCTORS FROM MAIN CONTROL PANEL TO ANNUNCIATOR PANEL IN CONTROL ROOM AS REQUIRED BY LIFT STATION MANUFACTURER. VERIFY REQUIREMENTS WITH SYSTEM INSTALLER AND SHOP DRAWINGS PRIOR TO ROUGH-IN. UTILIZE CONDUIT SEAL-OFFS FOR ALL CONDUITS ENTERING/EXITING SEWER VAULT PER NEC. REFER TO CIVIL DRAWING C-5 FOR ADDITIONAL INFORMATION.

9 E.C. SHALL PROVIDE CONNECTION TO NEW SELF-CONTAINED IRRIGATION PUMP SKID. PROVIDED AND INSTALLED BY IRRIGATION CONTRACTOR. E.C. SHALL COORDINATE CONNECTION REQUIREMENTS WITH EQUIPMENT PRIOR TO ROUGH-IN. PROVIDE TRAFFIC RATED 13"x24" PULL BOXES AS NEEDED FOR PULLING OF FEEDER CONDUCTORS, PULL BOXES SHALL BE NEW BASIS PCA SERIES OR EQUAL.

10 THIS BUILDING IS TO REMAIN FUNCTIONAL AT ALL TIMES, E.C. IS RESPONSIBLE FOR PROVIDING AND MAINTAINING TEMPORARY POWER TO BUILDING AS REQUIRED DURING CONSTRUCTION AND TRANSFORMER RELOCATION. ALL DOWNTIMES FOR SWITCH-OVERS SHALL BE COORDINATED WITH OWNER 1-WEEK IN ADVANCE.

11 E.C. SHALL PROVIDE AND INSTALL 13"x24" IN-GRADE PULL-BOX W/ T15 TRAFFIC RATED LID AS REQUIRED FOR LOW VOLTAGE CABLING TO GATE AND LIGHT POLES, NEW BASIS PCA SERIES OR EQUAL. FIELD LOCATE AS REQUIRED TO AVOID EXISTING UTILITIES, ETC.

12 PROVIDE AND INSTALL (2) 11"X18" PULLBOXES / T15 TRAFFIC RATED LIDS NEXT TO POLE BASE FOR POWER AND LOW VOLTAGE CABLING. PROVIDE 1" CONDUIT FROM EA. BOX STUBBED INTO POLE BASE FOR ROUTING OF CONDUCTORS. INSTALL LID FLUSH WITH FINISHED GRADE AND PROVIDE CRUSHED GRAVEL IN BOTTOM FOR DRAINAGE. NEW BASIS PCA SERIES OR EQUAL.

13 E.C. SHALL PROVIDE 120V CIRCUIT FOR SECURITY CAMERA POWER SUPPLIES AT POLE LIGHTS INDICATED PROVIDE CONDUIT/CONDUCTORS TO EACH POLE LIGHT WITH A SECURITY CAMERA, COORDINATE WITH SECURITY CONTRACTOR PRIOR TO ROUGH-IN.

PROFESSIONAL ENGINEER REGISTERED 13053 02/14/25 STATE OF IDAHO SHAWN A. MEADOR

PROJECT #: 2496

PAYNE Engineering Inc. Consulting Engineers
1823 E. Center
Pocatello, Idaho 83201
tel (208) 232-4439
www.payneengineeringinc.com

DATE	REVISION
02/14/2025	ISSUED FOR PERMIT

PHASE 1 PART B FOR:
TWIN FALLS COUNTY - WRIGHT AVE JAIL
2515 Wright Ave, Twin Falls, ID 83301
ELECTRICAL SITE PLAN

Laughlin Ricks Architecture
architecture/planning
134 3RD AVE. E. * Twin Falls, Idaho 83301
PHONE: (208) 736-8050

DATE: 02/14/25

SAM Drawn | TEP Checked

#23029 PROJECT #

E1B-0.2

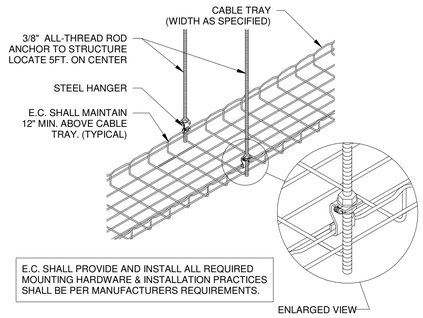

E.C. SHALL PROVIDE AND INSTALL ALL REQUIRED MOUNTING HARDWARE & INSTALLATION PRACTICES SHALL BE PER MANUFACTURERS REQUIREMENTS.

A BASKET TRAY MOUNTING DETAIL

SCALE: NONE

SCHEMATIC GENERATOR CONTROL RISER DIAGRAM

THIS DIAGRAM IS SCHEMATIC IN NATURE BASED ON A CAT GENERATOR SYSTEM E.C. IS RESPONSIBLE FOR COORDINATING ALL CONDUIT/CONDUCTORS REQUIRED FOR ALTERNATE GENERATOR MANUFACTURER'S.

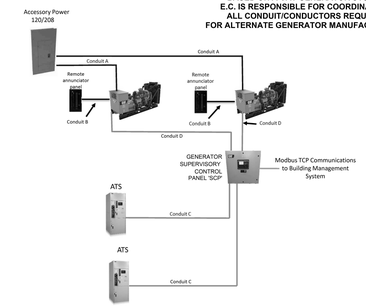

Note: Use Stranded Conductors Only for all wiring

Conduit A: Accessory Power (Per Each Generator)
(1)- 208 vac -40 amp 2 pole – Coolant Heater, Pump
(1) 208 vac – 20 amp 2 pole – Battery Charger
(1) 120 vac - 20 amp 1 pole Day Tank Supply Pump Power
(1) 120 vac – 20 amp 1 pole Day Tank Return Pump Power

Conduit B: Remote Annunciator Panel (Per Each Generator)
(1) pair # 14 awg stranded conductors
(1) Belden 3106 A Data Cable

Conduit C: ATS Control (Per Each Transfer Switch)
Ten # 14 awg stranded
(1) pair for start circuit
(1) pair for ats on line
(2) pair for spare
(1) Pair for ats load add/shed

Conduit D: Generator Control (Per Each Generator)
Ten # 14 awg stranded
(1) Pair for group start
(1) Pair for PLC OK
(2) Pair for spare
(1) Pair for ats on line to EMCP4.4
Two #10 awg stranded
(1) Pairs for battery power
Two Ethernet Cable
(2) Ethernet cables for communications. (Max cable distance 300 ft)

Control conduits B & D are for control. It is acceptable to combined these circuits in one conduit to generator control panel.

The EMCP 4.4 Master Panel shall be mounted indoors and no greater than 800 feet of cable length from generators.

The Remote annunciator panels shall be mounted indoors and no greater than 4000 feet of cable length from generators

B GENERATOR CONTROL DIAGRAM

SCALE: NONE

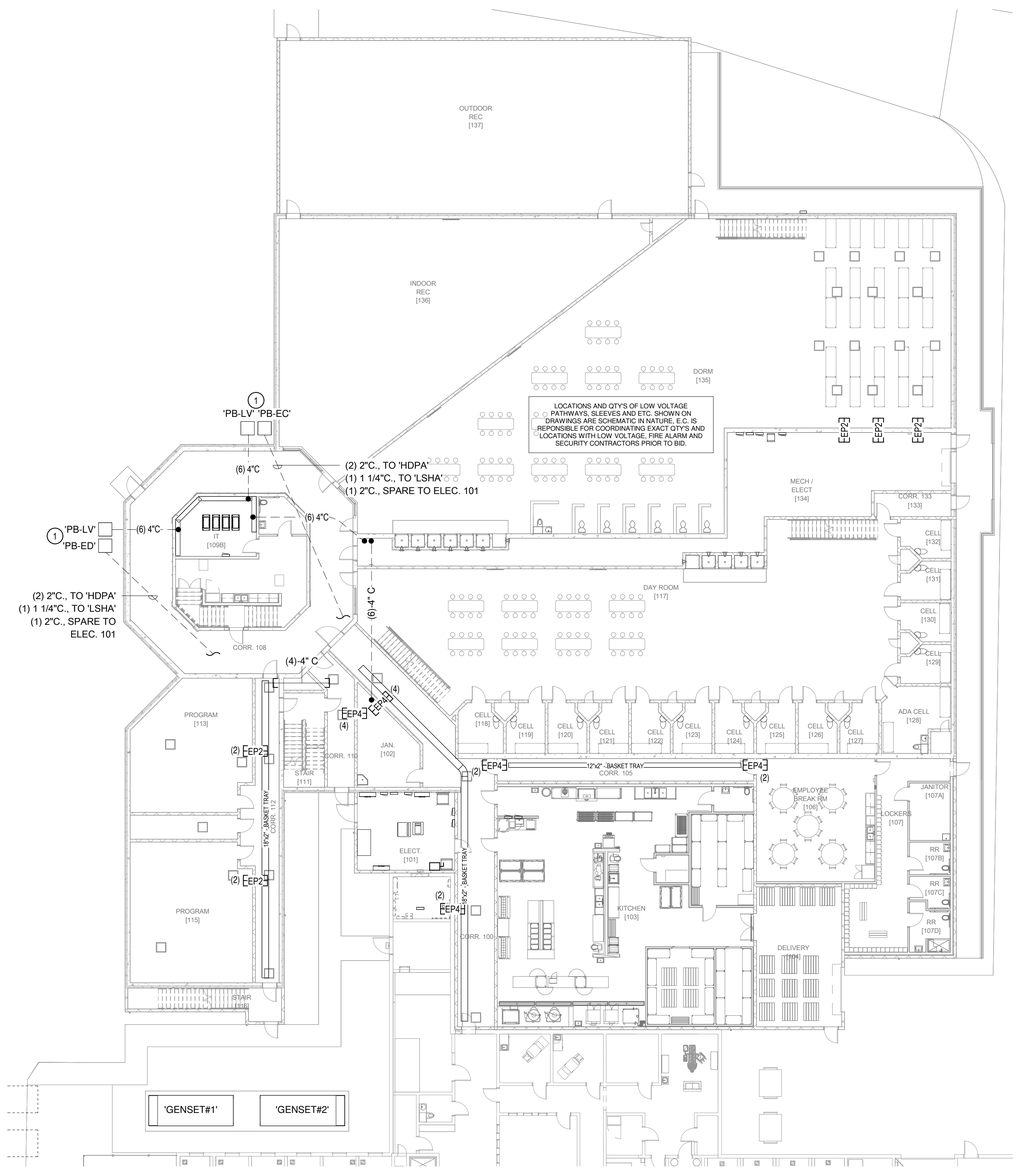

1 OVERALL MAIN FLOOR ELECTRICAL PLAN

SCALE: 1/16" = 1'-0"

0" 16' 32'

NORTH

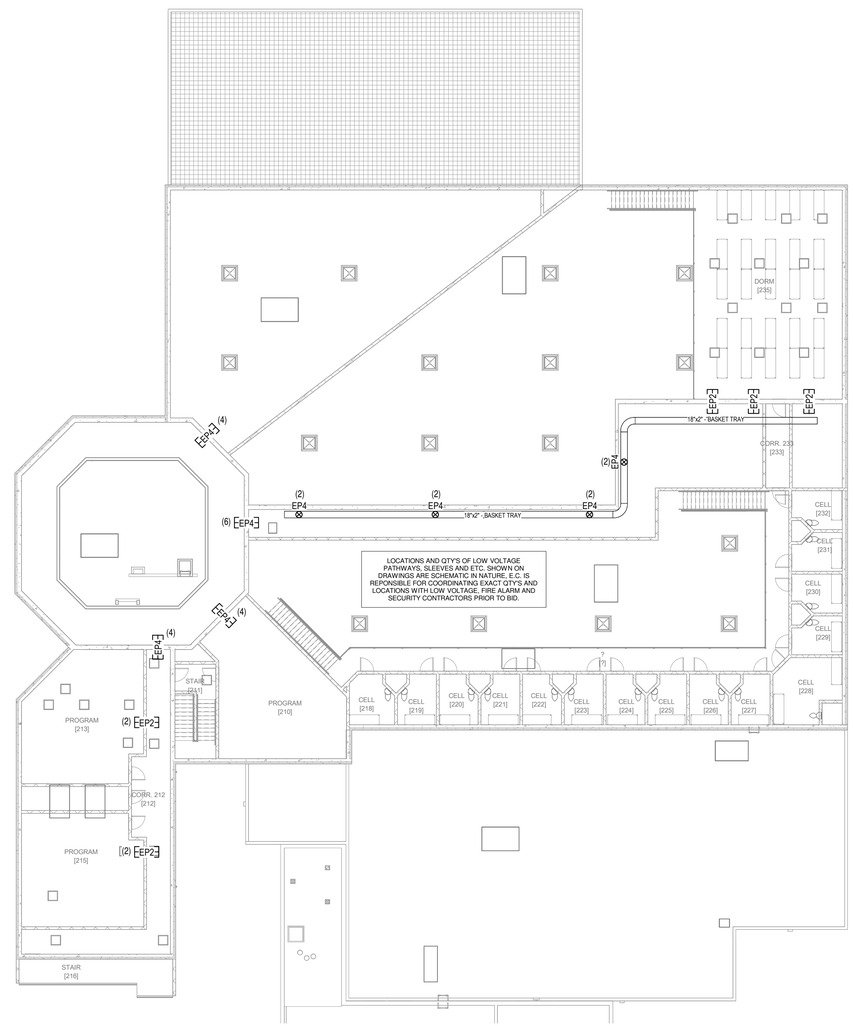

2 OVERALL UPPER MEZZANINE ELECTRICAL PLAN

SCALE: 1/16" = 1'-0"

0" 16' 32'

NORTH

GENERAL NOTES:

A. REFER TO SYMBOL SCHEDULE SHEET FOR PROJECT GENERAL NOTES AND GENERAL NOTES ASSOCIATED WITH THE INSTALLATION OF EACH SYSTEM, INCLUDINB BUT NOT LIMITED TO; LIGHTING, POWER, FIRE ALARM, SPECIAL SYSTEMS, ETC.

CORRECTIONAL FACILITY SPECIAL NOTES:

- ALL WIRING METHODS AND MATERIALS LOCATED IN AREAS ACCESSIBLE TO INMATES SHALL BE TAMPER-PROOF AND UL LISTED FOR USE IN THE ENVIRONMENT.
- ALL WIRE DEVICE COVERPLATES IN AREAS ACCESSIBLE TO INMATES SHALL BE TAMPER-PROOF & UL LISTED FOR THE LOCATION; KENALL MIGHT MAC SERIES; MODEL WSP/WPP-6 FASTENERS: TORX T-20 HEAD W/ CENTER PIN.
- SURFACE MOUNTED RACEWAY, DEVICES, ETC. IN ANY AREAS ACCESSIBLE TO INMATES IS PROHIBITED.

PRECAST CONCRETE ELECTRICAL ROUGH-IN:

- THIS BUILDING WILL BE CONSTRUCTED UTILIZING PRECAST CONCRETE PANELS. THE ELEC. CONTRACTOR IS REPSONSIBLE FOR COORDINATING WITH THE PRECASTER AND G.C. ALL LOCATIONS FOR RECESSED BOXES, CONDUIT SLEEVES, ETC. REQUIRED FOR INSTALLATION OF THE ELECTRICAL SYSTEMS INDICATED IN THE CONTRACT DOCUMENTS.
- THE ELECT. CONTRACTOR SHALL INCLUDE IN BASE BID ALL ELECTRICAL MATERIALS AND THE COSTS REQUIRED FOR TRAVEL TO THE PRECASTER'S SHOP (MAX 500 MILES FROM PROJECT LOCATION) FOR THE INSTALLATION OF THE ELECT. BOXES, CONDUITS, & ETC. PRIOR TO POURING OF THE PRECAST PANELS.
- SURFACE MOUNTED DEVICES, CONDUIT, ETC. IS PROHIBITED IN ALL AREAS ACCESSIBLE TO INMATES. ANY AND ALL SURFACE MOUNTED INSTALLATIONS SHALL BE PRE-APPROVED BY THE OWNER/ARCHITECT PRIOR TO INSTALLATION.

KEY NOTES:

1 E.C. SHALL PROVIDE AND INSTALL (2) 24"x36" IN-GRADE PULL-BOXES FOR FUTURE PHASES, (1) FOR POWER, (1) FOR LOW VOLTAGE, NEW BASIS PCA SERIES OR EQUAL. PROVIDE CONDUIT AS INDICATED, INSTALL PULL STRING AND CONDUIT PLUGS FOR EACH CONDUIT.

PROFESSIONAL ENGINEER REGISTERED 13053 02/14/25 STATE OF IDAHO SHAWN A. MEADOR

PROJECT #: 2496

PAYNE Engineering Inc. Consulting Engineers
1823 E. Center
Pocatello, Idaho 83201
tel (208) 232-4439
www.payneengineeringinc.com

DATE	REVISION
02/14/2025	ISSUED FOR PERMIT

PHASE 1 PART B FOR:
TWIN FALLS COUNTY - WRIGHT AVE JAIL
2515 Wright Ave, Twin Falls, ID 83301
OVERLALL FLOOR PLANS

Laughlin Ricks Architecture
architecture/planning
134 3RD AVE. E. * Twin Falls, Idaho 83301
PHONE: (208) 736-8050

DATE: 02/14/25
SAM Drawn
TEP Checked
#23029 PROJECT #

E1B-0.3

LIGHTING CONTROL/OCCUPANCY SENSOR SCHEDULE - PH1B

TYPE	DESCRIPTION	MFGR.	CATALOG #	APPROVED EQUALS	NOTES
DIMMER SWITCHES - LINE VOLTAGE					
D1	LINE VOLTAGE 0-10V DIMMER, ON/OFF/DIMMING PUSH-BUTTONS	SENSOR SWITCH	sPODMRA-D-**		2,3,4
D2	LINE VOLTAGE 0-10V DIMMER FOR MULTI-WAY OPERATION, ON/OFF/DIMMING PUSH-BUTTONS	SENSOR SWITCH	sPODMRA MWO-D-**		2,3,4
OCC. SENSORS - CEILING (LOW VOLTAGE)					
CD1	DUAL-TECHNOLOGY, SMALL MOTION 360 DEGREE COVERAGE, LOW VOLTAGE, W/ISOLATED RELAY	SENSOR SWITCH	CM PDT 9 R	COOPER, WATTSTOPPER, HUBBELL	1
OCC. SENSORS - WALL MOUNTED					
WDD	DUAL-TECHNOLOGY, 0-10V DIMMING	SENSOR SWITCH	WSX-PDT-D	COOPER, WATTSTOPPER, HUBBELL	2,5
WP1	PASSIVE-INFRARED, 1-POLE, NEUTRAL REQUIRED	SENSOR SWITCH	WSX-**	COOPER, WATTSTOPPER, HUBBELL	2

CONTROL & OCCUPANCY SENSOR SCHEDULE NOTES:

1. PROVIDE ADDITIONAL POWER PACKS; SENSOR SWITCH PP20 AS NEED FOR QTY OF OCCUPANCY SENSORS/SWITCHES.
2. DEVICE COLOR SHALL MATCH WIRING DEVICES; REFER TO SPECIFICATIONS.
3. REFER TO MANUFACTURER DOCUMENTATION FOR QTY AND SIZE OF CONDUCTORS BETWEEN LOW VOLTAGE SWITCH, SENSOR(S) AND POWER/RELAY PACKS.
4. PROVIDE SECONDARY RELAY PACK; SENSOR SWITCH SP20 AS NEEDED TO PROVIDE DUAL-LEVEL SWITCHING OF FIXTURES.
5. PROVIDE 0-10V DIMMING CONDUCTORS (GRAY & VIOLET) BETWEEN SWITCH AND LIGHT FIXTURES FOR DIMMING CONTROL.
6. PROGRAM ON/OFF TIMES OF RELAY'S AS DIRECTED BY OWNER. PROVIDE COMMISSIONING AS INDICATED IN GENERAL NOTES BELOW.

GENERAL LIGHTING CONTROL NOTES:

- E.C. SHALL BE RESPONSIBLE FOR THE PROGRAMMING/COMMISSIONING OF THE LIGHTING CONTROL SYSTEMS TO FUNCTION AS INDICATED ON THE DRAWINGS AND SHALL INCLUDE ALL REQUIRED COST IN THE BASE BID. FOR AREAS WITH DAYLIGHTING CONTROL, THE DAYLIGHTING SET-POINTS SHALL BE COORDINATED WITH THE OWNER FOR EACH AREA PRIOR TO FINAL PROGRAMMING OF THE DAYLIGHTING SENSOR(S). ALL PROGRAMMING/COMMISSIONING SHALL BE DONE BY A FACTORY CERTIFIED OR TRAINED PERSON.

LIGHTING FIXTURE SCHEDULE - PH1B

TYPE	DESCRIPTION	MOUNTING	VOLTS	WATTS	LUMENS	COLOR TEMP.(K)	MFGR.	CATALOG #	APPROVED MFGR'S	NOTES
CORRECTIONAL FIXTURE										
CF1	2X2 RECESSED TROFFER HIGH SECURITY CORRECTIONAL	RECESSED	120/277	45 W	4000	4000	KENALL	RMCD-2-TG-0/0-45L40K-DCC-DV-SYM/B-1	FAIL-SAFE, NEW STAR	1,2
CF2	2X2 RECESSED TROFFER HIGH SECURITY CORRECTIONAL, NIGHT-LITE	RECESSED	120/277	45 W	4000	4000	KENALL	RMCD-2-TG-0/0-45L40K-DCC-DV-SYM/B-1-NLW	FAIL-SAFE, NEW STAR	1,2
CF3	2X2 RECESSED TROFFER HIGH SECURITY CORRECTIONAL	RECESSED	120/277	75 W	6600	4000	KENALL	RMCD-2-TG-0/0-67L40K-DCC-DV-SYM/B-1	FAIL-SAFE, NEW STAR	1,2
CF4	2X2 RECESSED FLANGED HIGH SECURITY CORRECTIONAL LED	RECESSED	120/277	45 W	4000	4000	KENALL	RMCD-2-FL/SA-0/0-45L40K-DCC-DV-SYM/B-1	FAIL-SAFE, NEW STAR	1,2
CF5	2X2 SURFACE HIGH SECURITY CORRECTIONAL LED	SURFACE	120-277	50 W	5000	4000	KENALL	SSD-2-1/1-45L40K-DCC-DV-SYM/9-1	FAIL-SAFE, NEW STAR	1,2
CF6	2X4 SURFACE HIGH SECURITY CORRECTIONAL LED	SURFACE	120-277	75 W	9000	4000	KENALL	SSD-4-1/1-67L40K-DCC-DV-SYM/9-1	FAIL-SAFE, NEW STAR	1,2
CF7	2X4 SURFACE HIGH SECURITY CORRECTIONAL LED	SURFACE	120/277	100 W	11400	4000	KENALL	SSD-4-1/1-90L40K-DCC-DV-SYM/9-1	FAIL-SAFE, NEW STAR	1,2
CF8	2X4 RECESSED FLANGED HIGH SECURITY CORRECTIONAL LED	RECESSED	120/277	75 W	7400	4000	KENALL	RMCD-4-FL/SA-0/0-67L40K-DCC-DV-SYM/B-1	FAIL-SAFE, NEW STAR	1,2
CF9	2FT CORNER MOUNT HIGH SECURITY, WET LOCATION LISTED	CORNER	120/277	25 W	2300	4000	KENALL	CC-2-0/0-25L40K-DCC-DV-SYM/J-1-WL	FAIL-SAFE, NEW STAR	2,4
CF10	4FT CORNER MOUNT HIGH SECURITY, W/ NIGHT-LITE	CORNER	120/277	75 W	7000	4000	KENALL	CC-4-0/0-67L40K-DCC-DV-SYM/J-1-NLW	FAIL-SAFE, NEW STAR	2,4
CF11	4FT WALL MOUNT HIGH SECURITY, W/ NIGHT-LITE	WALL	120/277	75 W	7000	4000	KENALL	WCD-4-0/0-67L40K-DCC-DV-SYM/J-1-DLN	FAIL-SAFE, NEW STAR	2
CF12	1X4 SURFACE HIGH SECURITY CORRECTIONAL LED	SURFACE	120/277	50 W	5000	4000	KENALL	SSA-4-1/1-45L40K-DCC-DV-SYN/9-1	FAIL-SAFE, NEW STAR	2
CFE1	LOW PROFILE EXTERIOR LED WALL PACK, VANDAL RESISTANT, FIELD SELECTABLE LUMENS	WALL	120/277	100 W	12,300	4000	LITHONIA	TWPX3 LED ALO 40K MVOLT DDBXD		
CFX1	SINGLE FACE HIGH IMPACT EXIT SIGN, GREEN LED, CEILING/WALL MOUNT	WALL OR CEILING	120/277	2 W	N/A	N/A	KENALL	METSU-MW-G-DT		
STANDARD FIXTURE										
FB1	2X2 LED FLAT PANEL, FIELD SELECTABLE LUMENS/CCT	RECESSED	120/277	40 W	4000	4000	LITHONIA	CPX-2X2-AL07-80CRI-SWW7-SWL-MVOLT	COOPER	1
FB2	2X4 LED FLAT PANEL, FIELD SELECTABLE LUMENS/CCT	RECESSED	120/277	40 W	5000	4000	LITHONIA	CPX-2X4-AL08-80CRI-SWW7-SWL-MVOLT	COOPER	1
FB2B	2X4 LED FLAT PANEL, FIELD SELECTABLE LUMENS/CCT, EMERG. BATTERY PACK	RECESSED	120/277	40 W	5000	4000	LITHONIA	CPX-2X4-AL08-80CRI-SWW7-SWL-MVOLT-E10WLCP	COOPER	1
FB3	5" ROUND SURFACE LED, WET LOCATION	SURFACE	120/277	10 W	800	4000	JUNO LTG	JSF-5IN 07LM-SWW5-90CRI-MVOLT ZT-WH	COOPER	
FB4	4FT LED WRAPAROUND, FIELD SELECTABLE LUMENS/CCT	SURFACE	120/277	40 W	MED	4000	LITHONIA	FML4W 48 AL06 8SWW2 TD	COOPER	1
FB5	WALL MOUNTED LED	SURFACE	120-277	10 W	850	4000	LITHONIA	WPX0 LED ALO-SWW2-MVOLT-PE-DDBXD		3
FB6	4FT LED STRIP, FIELD SELECTABLE LUMENS/CCT	SURFACE	120/277	30 W	4000	4000	LITHONIA	CSS L48 ALO3 MVOLT SWW3 80CRI	COOPER	
FB7	8FT LED STRIP, FIELD SELECTABLE LUMENS	SUSPENDED	120/277	60 W	8000	4000	LITHONIA	CSS L96 ALO4 MVOLT SWW3 80CRI	COOPER	
FBE1	AREA POLE LIGHT, TYPE 5 SMALL DIST.	SEE POLE DETAIL	MULTI-TAP	60 W	7500	4000	LITHONIA	RSX1 LED-P1-40K-R5S-MVOLT-SPA-DDBXD POLE: SSS QS-25-4C-DM19AS-DDBXD	COOPER	
FBE2	LED WALL PACK, FORWARD THROW MED DIST.	SURFACE	120/277	80 W	10000	4000	LITHONIA	DSXW2 LED-P6-40K-80CRI-TFTM-MVOLT-SRM-BBW-SCBA		

LIGHT FIXTURE SCHEDULE NOTES:

1. REFER TO DRAWINGS FOR FIXTURES REQUIRED TO HAVE 0-10V OR STEP-LEVEL DIMMING CONTROL. PROVIDE FIXTURE(S) WITH LED DRIVER(S) AND REQUIRED DIMMING/SWITCH-LEG CONDUCTORS BETWEEN SWITCH(ES) AND FIXTURE(S) TO PROVIDE CONTROL AS INDICATED ON DRAWINGS.
2. WHERE INDICATED ON DRAWINGS FIXTURE SHALL BE CONTROLLED VIA CONTROL ROOM. NITE-LIGHT IN FIXTURE SHALL BE CONTROLLED SEPERATELY FROM GENERAL LIGHTING.
3. SCBA - STANDARD COLOR BY ARCHITECT/OWNER (COORDINATE COLOR WITH ARCHITECT/OWNER PRIOR TO ORDERING.)
4. CORNER MOUNTED FIXTURE SHALL BE INSTALLED TIGHT AGAINST CEILING, FIELD COORDINATE WITH ACTUAL BUILDING CONSTRUCTION.

GENERAL LIGHTING SCHEDULE NOTES:

- LIGHTING FIXTURES INDICATED IN SCHEDULE ARE BASIS OF DESIGN, ALTERNATE MANUFACTURERS SHALL BE PRE-APPROVED BY ADDENDUM. ALTERNATE MANUCATURERS SHALL SUBMIT PER-APPROVALS TO ENGINEER A MINIMUM OF 10 DAYS PRIOR TO PROJECT BID DATE.

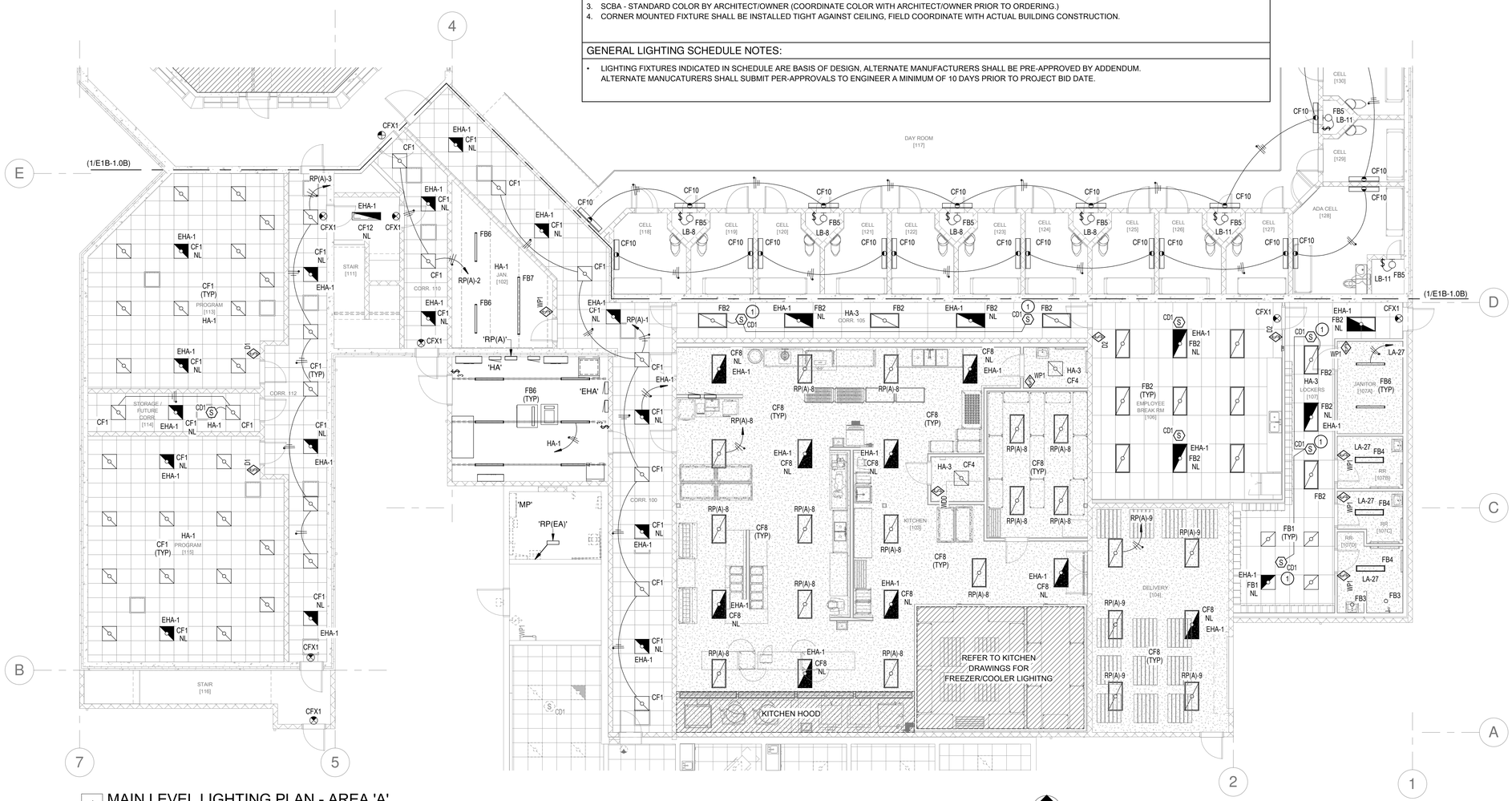

1 MAIN LEVEL LIGHTING PLAN - AREA 'A'
SCALE: 1/8" = 1'-0"

0' 8' 16'
NORTH

GENERAL NOTES:

A. REFER TO SYMBOL SCHEDULE SHEET FOR PROJECT GENERAL NOTES AND GENERAL NOTES ASSOCIATED WITH THE INSTALLATION OF EACH SYSTEM, INCLUDINB BUT NOT LIMITED TO; LIGHTING, POWER, FIRE ALARM, SPECIAL SYSTEMS, ETC.

CORRECTIONAL FACILITY SPECIAL NOTES:

- ALL WIRING METHODS AND MATERIALS LOCATED IN AREAS ACCESSIBLE TO INMATES SHALL BE TAMPER-PROOF AND UL LISTED FOR USE IN THE ENVIRONMENT.
- ALL WIRE DEVICE COVERPLATES IN AREAS ACCESSIBLE TO INMATES SHALL BE TAMPER-PROOF & UL LISTED FOR THE LOCATION; KENALL MIGHT MAC SERIES; MODEL WSP/WPP-6 FASTENERS: TORX T-20 HEAD W/ CENTER PIN.
- SURFACE MOUNTED RACEWAY, DEVICES, ETC. IN ANY AREAS ACCESSIBLE TO INMATES IS PROHIBITED.

PRECAST CONCRETE ELECTRICAL ROUGH-IN:

- THIS BUILDING WILL BE CONSTRUCTED UTILIZING PRECAST CONCRETE PANELS. THE ELEC. CONTRACTOR IS REPSONSIBLE FOR COORDINATING WITH THE PRECASTER AND G.C. ALL LOCATIONS FOR RECESSED BOXES, CONDUIT SLEEVES, ETC. REQUIRED FOR INSTALLATION OF THE ELECTRICAL SYSTEMS INDICATED IN THE CONTRACT DOCUMENTS.
- THE ELECT. CONTRACTOR SHALL INCLUDE IN BASE BID ALL ELECTRICAL MATERIALS AND THE COSTS REQUIRED FOR TRAVEL TO THE PRECASTER'S SHOP (MAX 500 MILES FROM PROJECT LOCATION) FOR THE INSTALLATION OF THE ELECT. BOXES, CONDUITS, & ETC. PRIOR TO POURING OF THE PRECAST PANELS.
- SURFACE MOUNTED DEVICES, CONDUIT, ETC. IS PROHIBITED IN ALL AREAS ACCESSIBLE TO INMATES. ANY AND ALL SURFACE MOUNTED INSTALLATIONS SHALL BE PRE-APPROVED BY THE OWNER/ARCHITECT PRIOR TO INSTALLATION.

KEY NOTES:

1 CONNECT ALL OCCUPANCY SENSORS IN ROOM IN PARALLEL SO THAT ANY OCC. SENSOR WILL TURN ON ALL ROOM LIGHTING.

KEY PLAN:

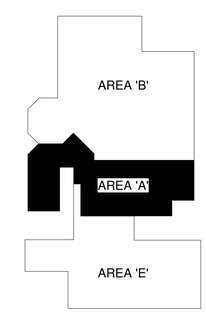

PROFESSIONAL ENGINEER REGISTERED 13053 02/14/25 STATE OF IDAHO SHAWN A. MEADOR

PROJECT #: 2496

PAYNE Engineering Inc. Consulting Engineers
1823 E. Center
Pocatello, Idaho 83201
tel (208) 232-4439
www.payneengineeringinc.com

DATE	REVISION
02/14/2025	ISSUED FOR PERMIT

PHASE 1 PART B FOR:
TWIN FALLS COUNTY - WRIGHT AVE JAIL
2515 Wright Ave, Twin Falls, ID 83301
MAIN FLOOR LIGHTING PLAN - AREA 'A' & SCHEDULES

Laughlin Ricks Architecture
architecture/planning
134 3RD AVE. E. * Twin Falls, Idaho 83301
PHONE: (208) 736-8050

DATE: 02/14/25
SAM Drawn
TEP Checked
#23029 PROJECT #

E1B-1.0A

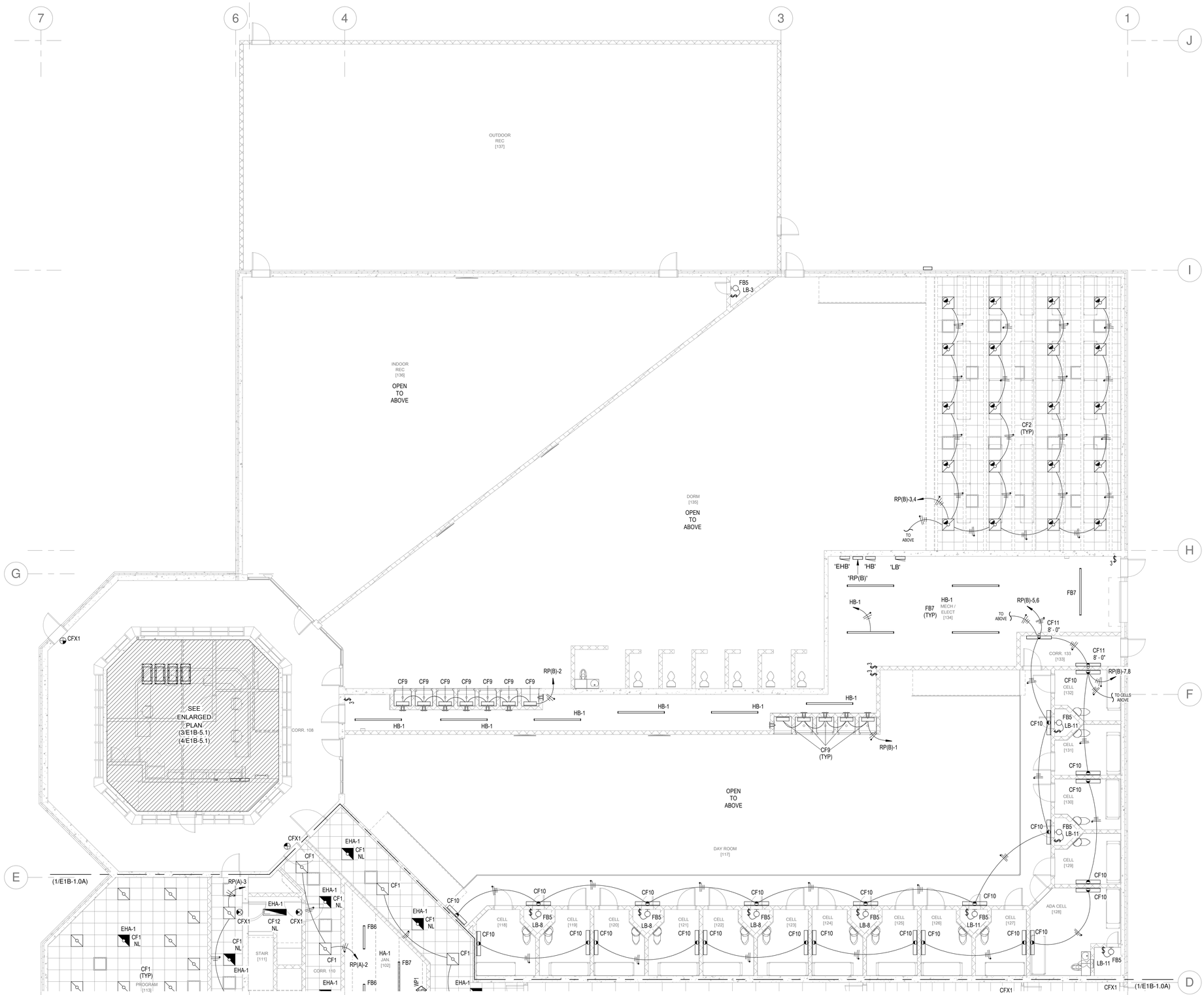

1 MAIN LEVEL LIGHTING PLAN - AREA 'B'

SCALE: 1/8" = 1'-0"

0" 8' 16'

NORTH

GENERAL NOTES:

A. REFER TO SYMBOL SCHEDULE SHEET FOR PROJECT GENERAL NOTES AND GENERAL NOTES ASSOCIATED WITH THE INSTALLATION OF EACH SYSTEM, INCLUDINB BUT NOT LIMITED TO; LIGHTING, POWER, FIRE ALARM, SPECIAL SYSTEMS, ETC.

CORRECTIONAL FACILITY SPECIAL NOTES:

- ALL WIRING METHODS AND MATERIALS LOCATED IN AREAS ACCESSIBLE TO INMATES SHALL BE TAMPER-PROOF AND UL LISTED FOR USE IN THE ENVIRONMENT.
- ALL WIRE DEVICE COVERPLATES IN AREAS ACCESSIBLE TO INMATES SHALL BE TAMPER-PROOF & UL LISTED FOR THE LOCATION; KENALL MIGHT MAC SERIES; MODEL WSP/WPP-6 FASTENERS: TORX T-20 HEAD W/ CENTER PIN.
- SURFACE MOUNTED RACEWAY, DEVICES, ETC. IN ANY AREAS ACCESSIBLE TO INMATES IS PROHIBITED.

PRECAST CONCRETE ELECTRICAL ROUGH-IN:

- THIS BUILDING WILL BE CONSTRUCTED UTILIZING PRECAST CONCRETE PANELS. THE ELEC. CONTRACTOR IS REPSONSIBLE FOR COORDINATING WITH THE PRECASTER AND G.C. ALL LOCATIONS FOR RECESSED BOXES, CONDUIT SLEEVES, ETC. REQUIRED FOR INSTALLATION OF THE ELECTRICAL SYSTEMS INDICATED IN THE CONTRACT DOCUMENTS.
- THE ELECT. CONTRACTOR SHALL INCLUDE IN BASE BID ALL ELECTRICAL MATERIALS AND THE COSTS REQUIRED FOR TRAVEL TO THE PRECASTER'S SHOP (MAX 500 MILES FROM PROJECT LOCATION) FOR THE INSTALLATION OF THE ELECT. BOXES, CONDUITS, & ETC. PRIOR TO POURING OF THE PRECAST PANELS.
- SURFACE MOUNTED DEVICES, CONDUIT, ETC. IS PROHIBITED IN ALL AREAS ACCESSIBLE TO INMATES. ANY AND ALL SURFACE MOUNTED INSTALLATIONS SHALL BE PRE-APPROVED BY THE OWNER/ARCHITECT PRIOR TO INSTALLATION.

KEY NOTES:

KEY PLAN:

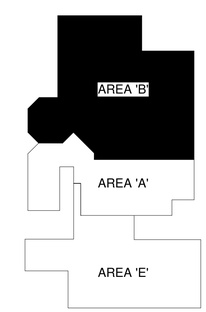

PROFESSIONAL ENGINEER REGISTERED 13053 02/14/25 STATE OF IDAHO SHAWN A. MEADOR

PROJECT #: 2496

PAYNE Engineering Inc. Consulting Engineers
1823 E. Center
Pocatello, Idaho 83201
tel (208) 232-4439
www.payneengineeringinc.com

DATE	REVISION
02/14/2025	ISSUED FOR PERMIT

PHASE 1 PART B FOR:
TWIN FALLS COUNTY - WRIGHT AVE JAIL
2515 Wright Ave, Twin Falls, ID 83301
MAIN FLOOR LIGHTING PLAN - AREA 'B'

Laughlin Ricks Architecture
architecture/planning
134 3RD AVE. E. * Twin Falls, Idaho 83301
PHONE: (208) 736-8050

DATE: 02/14/25

SAM Drawn | TEP Checked

#23029 PROJECT #

E1B-1.0B

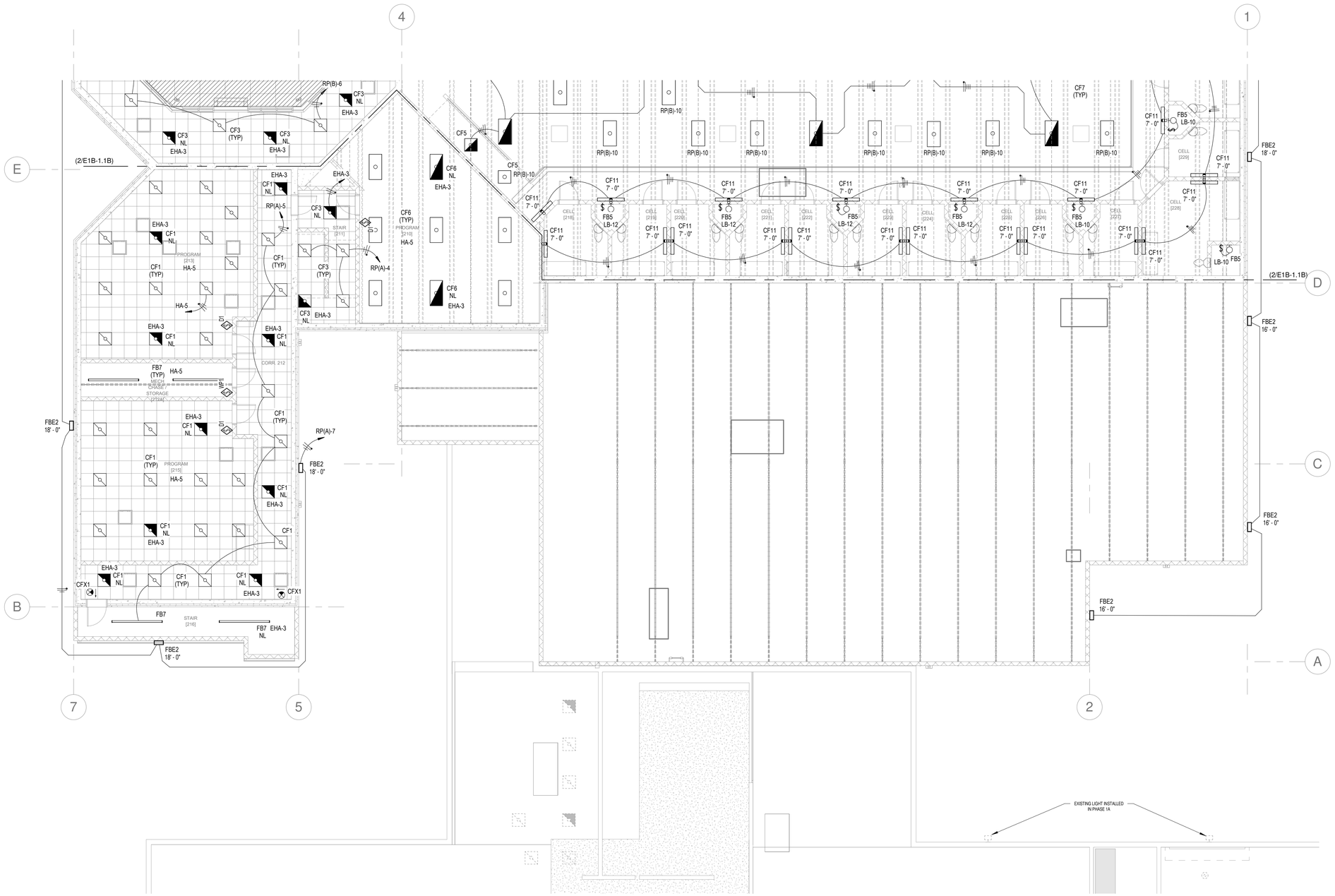

1 MEZZANINE LIGHTING PLAN - AREA 'A'

SCALE: 1/8" = 1'-0"

0" 8' 16'

NORTH

GENERAL NOTES:

A. REFER TO SYMBOL SCHEDULE SHEET FOR PROJECT GENERAL NOTES AND GENERAL NOTES ASSOCIATED WITH THE INSTALLATION OF EACH SYSTEM, INCLUDINB BUT NOT LIMITED TO; LIGHTING, POWER, FIRE ALARM, SPECIAL SYSTEMS, ETC.

CORRECTIONAL FACILITY SPECIAL NOTES:

- ALL WIRING METHODS AND MATERIALS LOCATED IN AREAS ACCESSIBLE TO INMATES SHALL BE TAMPER-PROOF AND UL LISTED FOR USE IN THE ENVIRONMENT.
- ALL WIRE DEVICE COVERPLATES IN AREAS ACCESSIBLE TO INMATES SHALL BE TAMPER-PROOF & UL LISTED FOR THE LOCATION; KENALL MIGHT MAC SERIES; MODEL WSP/WPP-6 FASTENERS: TORX T-20 HEAD W/ CENTER PIN.
- SURFACE MOUNTED RACEWAY, DEVICES, ETC. IN ANY AREAS ACCESSIBLE TO INMATES IS PROHIBITED.

PRECAST CONCRETE ELECTRICAL ROUGH-IN:

- THIS BUILDING WILL BE CONSTRUCTED UTILIZING PRECAST CONCRETE PANELS. THE ELEC. CONTRACTOR IS REPSONSIBLE FOR COORDINATING WITH THE PRECASTER AND G.C. ALL LOCATIONS FOR RECESSED BOXES, CONDUIT SLEEVES, ETC. REQUIRED FOR INSTALLATION OF THE ELECTRICAL SYSTEMS INDICATED IN THE CONTRACT DOCUMENTS.
- THE ELECT. CONTRACTOR SHALL INCLUDE IN BASE BID ALL ELECTRICAL MATERIALS AND THE COSTS REQUIRED FOR TRAVEL TO THE PRECASTER'S SHOP (MAX 500 MILES FROM PROJECT LOCATION) FOR THE INSTALLATION OF THE ELECT. BOXES, CONDUITS, & ETC. PRIOR TO POURING OF THE PRECAST PANELS.
- SURFACE MOUNTED DEVICES, CONDUIT, ETC. IS PROHIBITED IN ALL AREAS ACCESSIBLE TO INMATES. ANY AND ALL SURFACE MOUNTED INSTALLATIONS SHALL BE PRE-APPROVED BY THE OWNER/ARCHITECT PRIOR TO INSTALLATION.

KEY NOTES:

KEY PLAN:

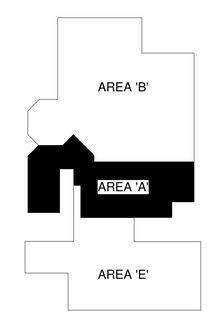

PROFESSIONAL ENGINEER REGISTERED 13053 02/14/25 STATE OF IDAHO SHAWN A. MEADOR

PROJECT #: 2496

PAYNE Engineering Inc. Consulting Engineers
1823 E. Center
Pocatello, Idaho 83201
tel (208) 232-4439
www.payneengineeringinc.com

DATE	REVISION
02/14/2025	ISSUED FOR PERMIT

PHASE 1 PART B FOR:
TWIN FALLS COUNTY - WRIGHT AVE JAIL
2515 Wright Ave, Twin Falls, ID 83301
MEZZANINE LIGHTING PLAN - AREA 'A'

Laughlin Ricks Architecture
architecture/planning
134 3RD AVE. E. * Twin Falls, Idaho 83301
PHONE: (208) 736-8050

DATE: 02/14/25

SAM Drawn | TEP Checked

#23029 PROJECT #

E1B-1.1A

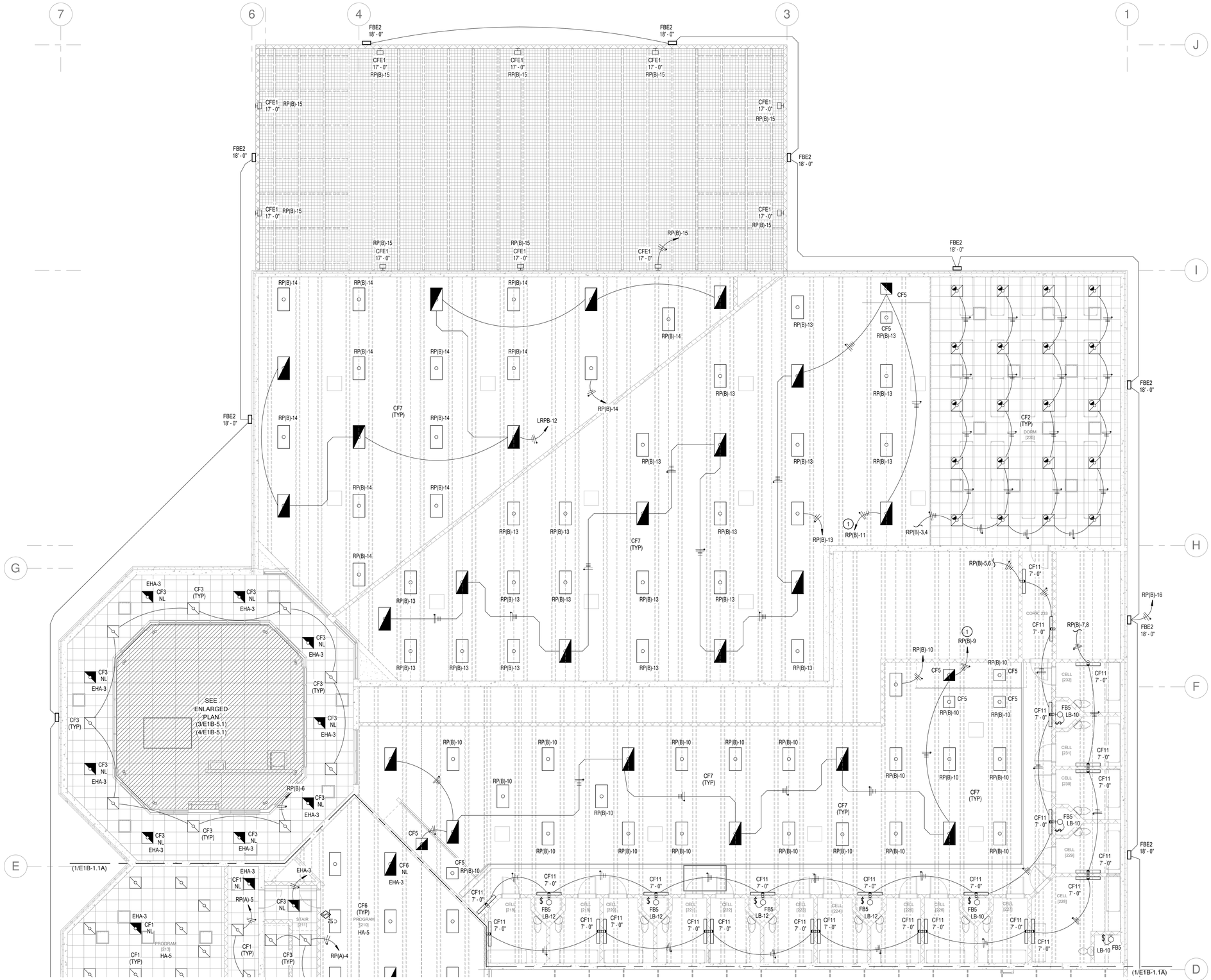

2 MEZZANINE LIGHTING PLAN - AREA 'B'

SCALE: 1/8" = 1'-0"

0" 8' 16'

NORTH

GENERAL NOTES:

A. REFER TO SYMBOL SCHEDULE SHEET FOR PROJECT GENERAL NOTES AND GENERAL NOTES ASSOCIATED WITH THE INSTALLATION OF EACH SYSTEM, INCLUDINB BUT NOT LIMITED TO; LIGHTING, POWER, FIRE ALARM, SPECIAL SYSTEMS, ETC.

CORRECTIONAL FACILITY SPECIAL NOTES:

- ALL WIRING METHODS AND MATERIALS LOCATED IN AREAS ACCESSIBLE TO INMATES SHALL BE TAMPER-PROOF AND UL LISTED FOR USE IN THE ENVIRONMENT.
- ALL WIRE DEVICE COVERPLATES IN AREAS ACCESSIBLE TO INMATES SHALL BE TAMPER-PROOF & UL LISTED FOR THE LOCATION; KENALL MIGHT MAC SERIES; MODEL WSP/WPP-6 FASTENERS: TORX T-20 HEAD W/ CENTER PIN.
- SURFACE MOUNTED RACEWAY, DEVICES, ETC. IN ANY AREAS ACCESSIBLE TO INMATES IS PROHIBITED.

PRECAST CONCRETE ELECTRICAL ROUGH-IN:

- THIS BUILDING WILL BE CONSTRUCTED UTILIZING PRECAST CONCRETE PANELS. THE ELEC. CONTRACTOR IS REPSONSIBLE FOR COORDINATING WITH THE PRECASTER AND G.C. ALL LOCATIONS FOR RECESSED BOXES, CONDUIT SLEEVES, ETC. REQUIRED FOR INSTALLATION OF THE ELECTRICAL SYSTEMS INDICATED IN THE CONTRACT DOCUMENTS.
- THE ELECT. CONTRACTOR SHALL INCLUDE IN BASE BID ALL ELECTRICAL MATERIALS AND THE COSTS REQUIRED FOR TRAVEL TO THE PRECASTER'S SHOP (MAX 500 MILES FROM PROJECT LOCATION) FOR THE INSTALLATION OF THE ELECT. BOXES, CONDUITS, & ETC. PRIOR TO POURING OF THE PRECAST PANELS.
- SURFACE MOUNTED DEVICES, CONDUIT, ETC. IS PROHIBITED IN ALL AREAS ACCESSIBLE TO INMATES. ANY AND ALL SURFACE MOUNTED INSTALLATIONS SHALL BE PRE-APPROVED BY THE OWNER/ARCHITECT PRIOR TO INSTALLATION.

KEY NOTES:

1 PROVIDE 0-10V DIMMING FOR THIS LIGHTING ZONE, LIGHT LEVEL TO BE FIELD TUNED AS DIRECTED BY OWNER. PROVIDE 0-10V DIMMING CONDUCTORS AS MODULE IN CONTROL PANEL.

KEY PLAN:

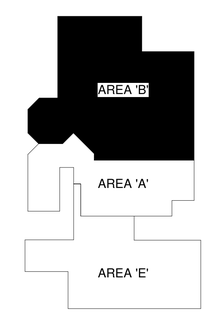

PROFESSIONAL ENGINEER REGISTERED 13053 02/14/25 STATE OF IDAHO SHAWN A. MEADOR

PROJECT #: 2496

PAYNE Engineering Inc. Consulting Engineers
1823 E. Center
Pocatello, Idaho 83201
tel (208) 232-4439
www.payneengineeringinc.com

DATE	REVISION
02/14/2025	ISSUED FOR PERMIT

PHASE 1 PART B FOR:
TWIN FALLS COUNTY - WRIGHT AVE JAIL
2515 Wright Ave, Twin Falls, ID 83301
MEZZANINE LIGHTING PLAN - AREA 'B'

Laughlin Ricks Architecture
architecture/planning
134 3RD AVE. E. * Twin Falls, Idaho 83301
PHONE: (208) 736-8050

DATE: 02/14/25

SAM Drawn | TEP Checked

#23029 PROJECT #

E1B-1.1B

ELECTRICAL AV/TV BOX SCHEDULE

ID	DESCRIPTION	MFGR.	PART #'s	NOTES
AV3	LARGE CAPACITY 3-GANG AV BOX W/ MUDRING, LV DIVIDER AND COVERPLATE.	HUBBELL	HBL263/HBL79*/HBL981	2,3,4
SB	LARGE CAPACITY 3-GANG BOX W/ MUDRING, LV DIVIDER AND COVERPLATE FOR SMARTBOARD.	HUBBELL	HBL263/HBL79*/HBL981	1,2,3,4
TV2	2-GANG AV WALL BOXES WITH DIVIDER & RECESSED 120V RECPT., DATA & RG6 CONNECTIONS	HUBBELL	HBL985/RR1514W	1,3,4

AV & LOW VOLTAGE BOX SCHEDULE NOTES:

1. E.C. SHALL FIELD VERIFY EXACT LOCATION & MOUNTING HEIGHT WITH SMARTBOARD OR TV AND OWNER PRIOR TO ROUGH-IN.
2. PROVIDE LV CONDUIT(S) AS INDICATED ON DRAWINGS TO ACCESSIBLE CEILING SPACE FOR ROUTING OF DATA AND/OR LOW VOLTAGE CABLING.
3. PROVIDE REQUIRED MUDRINGS, TERMINATIONS, COVERPLATES, INSERTS AND ETC FOR COMPLETE INSTALLATION.
4. PROVIDE 120V/20A DUPLEX RECEPTACLE, DATA INSERT AND BRUSH PASSTHROUGH INSERT, REFER TO DETAIL.

MECH. - PLUMBING EQUIP. SCHEDULE - PH1B

EQUIP. ID	VOLTS / PH.	WATTS	FLA	CIRCUIT	FEEDER	DISCONNECT	NOTES
RP-1	120 V / 1 PH.	50 W	0.4 A	<varies> - <varies>	1/2"C,2#12 + GND	CORD/PLUG	
WH-1	120 V / 1 PH.	200 W	1.7 A	<varies> - <varies>	1/2"C,2#12 + GND	CORD/PLUG	
WH-2	120 V / 1 PH.	200 W	1.7 A	LA - 22	1/2"C,2#12 + GND	CORD/PLUG	
WH-3	208 V / 1 PH.	3600 W	17.3 A	ECR - 34,36	1/2"C,2#12 + GND	DIRECT	3
WS-1	120 V / 1 PH.	200 W	1.7 A	LB - 16	1/2"C,2#12 + GND	CORD/PLUG	

MECHANICAL SCHEDULE NOTES:

1. CIRCUIT AND CONTROL EXHAUST FAN WITH ROOM LIGHTING CIRCUIT.
2. E.C. SHALL PROVIDE LOCAL DISCONNECT RATED, THERMAL-OVERLOAD SWITCH FOR EQUIPMENT; SWITCH RATING SHALL NOT BE LESS THEN CIRCUIT BREAKER SUPPLYING EQUIPMENT.
3. E.C. SHALL PROVIDE LOCAL DISCONNECT SWITCH FOR EQUIPMENT; SIZE AND TYPE AS INDICATED IN SCHEDULE. IF FUSED DISCONNECT IS SPECIFIED FOR EQUIPMENT, FUSE PER EQUIPMENT NAMEPLATE RATING.
4. INDOOR UNIT IS POWERED FROM OUTDOOR UNIT; COORDINATE EXACT NUMBER OF CONDUCTORS BETWEEN UNITS WITH M.C. PRIOR TO ROUGH-IN.
5. EQUIPMENT IS FACTORY SUPPLYED WITH DISCONNECT AND CONVIENENCE OUTLET; E.C. SHALL PROVIDE ALL NECESSARY CONNECTIONS.
6. INTERLOCK WITH ASSOCIATED MOTORIZED DAMPER AS DIRECTED BY M.C.
7. CONTROL FAN WITH DEDICATED LINE-VOLTAGE OCC. SENSOR, SET 30 MIN. TIME DELAY.
8. SMOKE EVACUATION FAN SHALL BE CONROLLED BY FIRE ALARM SYSTEM W/ OVERRIDE BY JAIL SECURITY SYSTEM AT CONTROL ROOM, ROUTE CIRCUIT THROUGH RELAY PANEL LOCATED NEXT TO PANEL.

MECH. - ELECTRIC HEATER SCHEDULE - PH1B

EQUIP. ID	VOLTS / PH.	WATTS	FLA	OCP	CIRCUIT	FEEDER	NOTES
EH-1	208 V / 1 PH.	2000 W	9.6 A	20 A	LA - 24,26	1/2"C,2#12 + GND	
EH-2	208 V / 1 PH.	2000 W	9.6 A	20 A	LA - 28,30	1/2"C,2#12 + GND	
EH-3	208 V / 1 PH.	2000 W	9.6 A	20 A	LB - 34,36	1/2"C,2#12 + GND	
EH-4	208 V / 1 PH.	2000 W	9.6 A	20 A	ECR - 30,32	1/2"C,2#12 + GND	

MECH. - UNIT HEATER SCHEDULE - PH1B

EQUIP. ID	VOLTS / PH.	HP	FLA	OCP	CIRCUIT	FEEDER	NOTES
UH-1	120 V / 1 PH.	1/50	2.0 A	15 A	LK - 16	1/2"C,2#12 + GND	2
UH-2	120 V / 1 PH.	1/50	2.0 A	15 A	LB - 1	1/2"C,2#12 + GND	2
UH-3	120 V / 1 PH.	1/50	2.0 A	15 A	LB - 4	1/2"C,2#12 + GND	2

PRECAST CONCRETE ELECTRICAL ROUGH-IN:

- THIS BUILDING WILL BE CONSTRUCTED UTILIZING PRECAST CONCRETE PANELS. THE ELEC. CONTRACTOR IS REPSONSIBLE FOR COORDINATING WITH THE PRECASTER AND G.C. ALL LOCATIONS FOR RECESSED BOXES, CONDUIT SLEEVES, ETC. REQUIRED FOR INSTALLATION OF THE ELECTRICAL SYSTEMS INDICATED IN THE CONTRACT DOCUMENTS.
- THE ELECT. CONTRACTOR SHALL INCLUDE IN BASE BID ALL ELECTRICAL MATERIALS AND THE COSTS REQUIRED FOR TRAVEL TO THE PRECASTER'S SHOP (MAX 500 MILES FROM PROJECT LOCATION) FOR THE INSTALLATION OF THE ELECT. BOXES, CONDUITS, & ETC. PRIOR TO POURING OF THE PRECAST PANELS.
- SURFACE MOUNTED DEVICES, CONDUIT, ETC. IS PROHIBITED IN ALL AREAS ACCESSIBLE TO INMATES. ANY AND ALL SURFACE MOUNTED INSTALLATIONS SHALL BE PRE-APPROVED BY THE OWNER/ARCHITECT PRIOR TO INSTALLATION.

GENERAL NOTES:

A. REFER TO SYMBOL SCHEDULE SHEET FOR PROJECT GENERAL NOTES AND GENERAL NOTES ASSOCIATED WITH THE INSTALLATION OF EACH SYSTEM, INCLUDINB BUT NOT LIMITED TO; LIGHTING, POWER, FIRE ALARM, SPECIAL SYSTEMS, ETC.

CORRECTIONAL FACILITY SPECIAL NOTES:

- ALL WIRING METHODS AND MATERIALS LOCATED IN AREAS ACCESSIBLE TO INMATES SHALL BE TAMPER-PROOF AND UL LISTED FOR USE IN THE ENVIRONMENT.
- ALL WIRE DEVICE COVERPLATES IN AREAS ACCESSIBLE TO INMATES SHALL BE TAMPER-PROOF & UL LISTED FOR THE LOCATION; KENALL MIGHT MAC SERIES; MODEL WSP/WPP-6 FASTENERS: TORX T-20 HEAD W/ CENTER PIN.
- SURFACE MOUNTED RACEWAY, DEVICES, ETC. IN ANY AREAS ACCESSIBLE TO INMATES IS PROHIBITED.

KEY NOTES:

1. 3-GANG BOX WITH POWER/DATA FOR SMARTBOARD, E.C. SHALL BE RESPONSIBLE FOR COORDINATING BOX LOCATION AND MOUNTING HEIGHT WITH SMARTBOARD AND OWNER PRIOR TO ROUGH-IN. SEE DETAIL AND SCHEDULE FOR ADDITIONAL INFORMATION.
2. PROVIDE AND INSTALL ENCLOSED CIRCUIT BREAKER WITH SHUNT-TRIP ACCESSORY. PROVIDE 1/2"C.,W#12 CONDUCTORS BETWEEN KITCHEN HOOD ANSUL SYSTEM AND SHUNT-TRIP BREAKER. BREAKER SHALL TRIP UPON ACTIVATION OF KITCHEN HOOD ANSUL SYSTEM. COORDINATE WITH KITCHEN HOOD INSTALLER/CONTRACTOR.
3. E.C. SHALL PROVIDE AND INSTALL RECEPTACLE FOR PLUMBING FIXTURE ELECTRONIC METERING CONTROL VALVE, COORDINATE EXACT LOCATION WITH P.C. PRIOR TO ROUGH-IN.
4. IN (1) 2"C., PROVIDE AND INSTALL 12-STRAND, SINGLE-MODE FIBER OPTIC BACKBONE CABLE IN INNER-DUCT FROM ELECT. ROOM TO NEW IT ROOM. PROVIDE ALL REQUIRED TERMINATIONS, LIU'S, PATCH PANELS AND ETC NEEDED TO EXTEND DATA CABLING SYSTEM.
5. PROVIDE AND INSTALL POWER/DATA AT HEIGHT INDICATED FOR FUTURE MONITOR, FIELD LOCATE WITH OWNER PRIOR TO ROUGH-IN.
6. E.C. SHALL STACK TRANSFORMERS, PROVIDE UNISTRUT FRAMING TO SUPPORT TRANSFORMER, COORDINATE WITH TRANSFORMER MANUFACTURER.

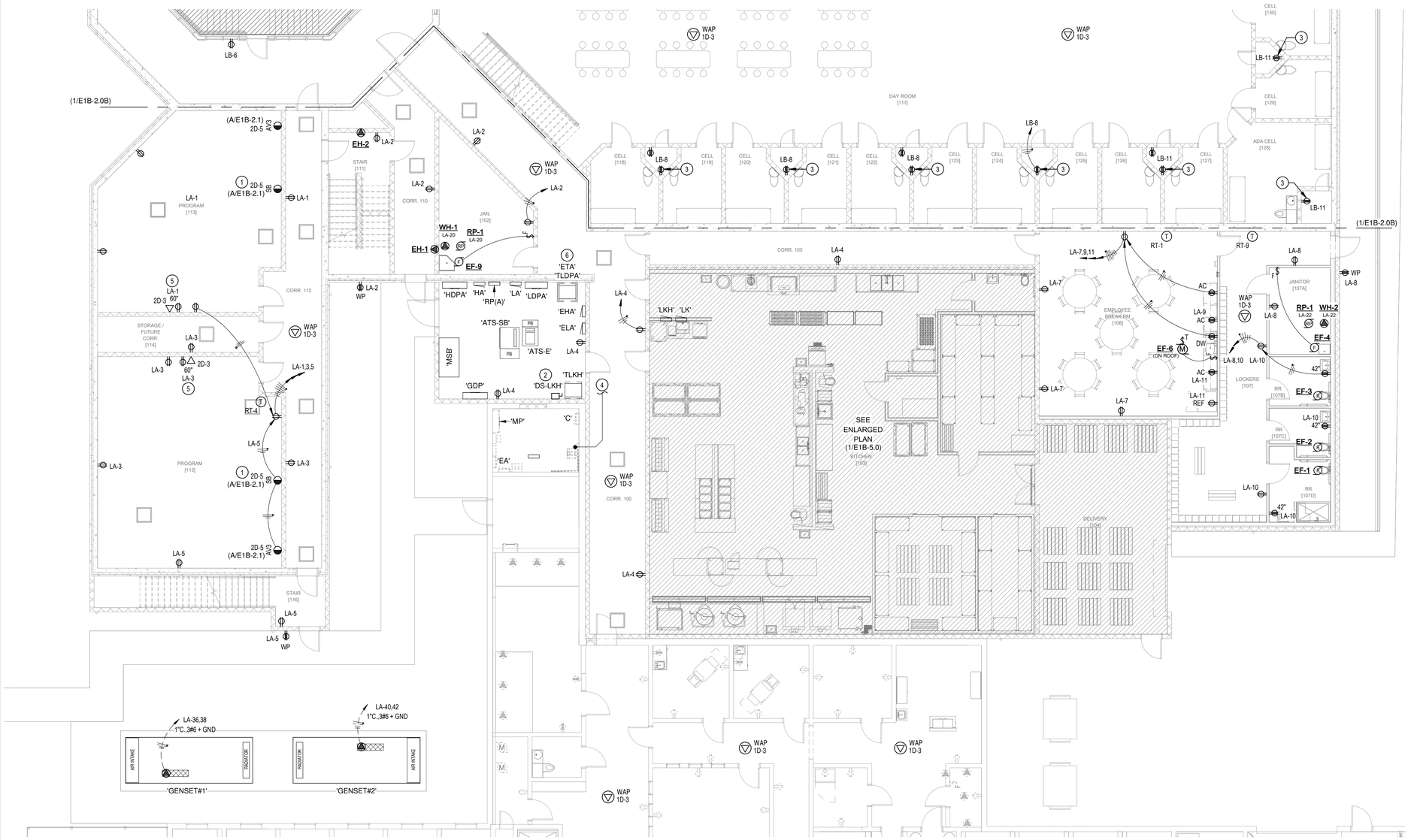

1 MAIN FLOOR POWER/DATA PLAN - AREA 'A'
SCALE: 1/8" = 1'-0"

0' 8' 16' NORTH

KEY PLAN:

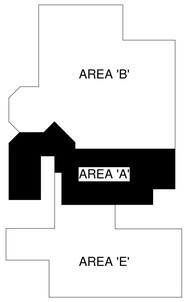

PROFESSIONAL ENGINEER REGISTERED 13053 02/14/25 STATE OF IDAHO SHAWN A. MEADOR

PROJECT #: 2496

PAYNE Engineering Inc. Consulting Engineers
1823 E. Center
Pocatello, Idaho 83201
tel (208) 232-4439
www.payneengineeringinc.com

DATE 02/14/2025 REVISION ISSUED FOR PERMIT

PHASE 1 PART B FOR:
TWIN FALLS COUNTY - WRIGHT AVE JAIL
2515 Wright Ave, Twin Falls, ID 83301
MAIN FLOOR POWER/DATA PLAN - AREA 'A'

Laughlin Ricks Architecture
architecture/planning
134 3RD AVE. E. * Twin Falls, Idaho 83301
PHONE: (208) 736-8050

DATE: 02/14/25
SAM Drawn TEP Checked
#23029 PROJECT #

E1B-2.0A

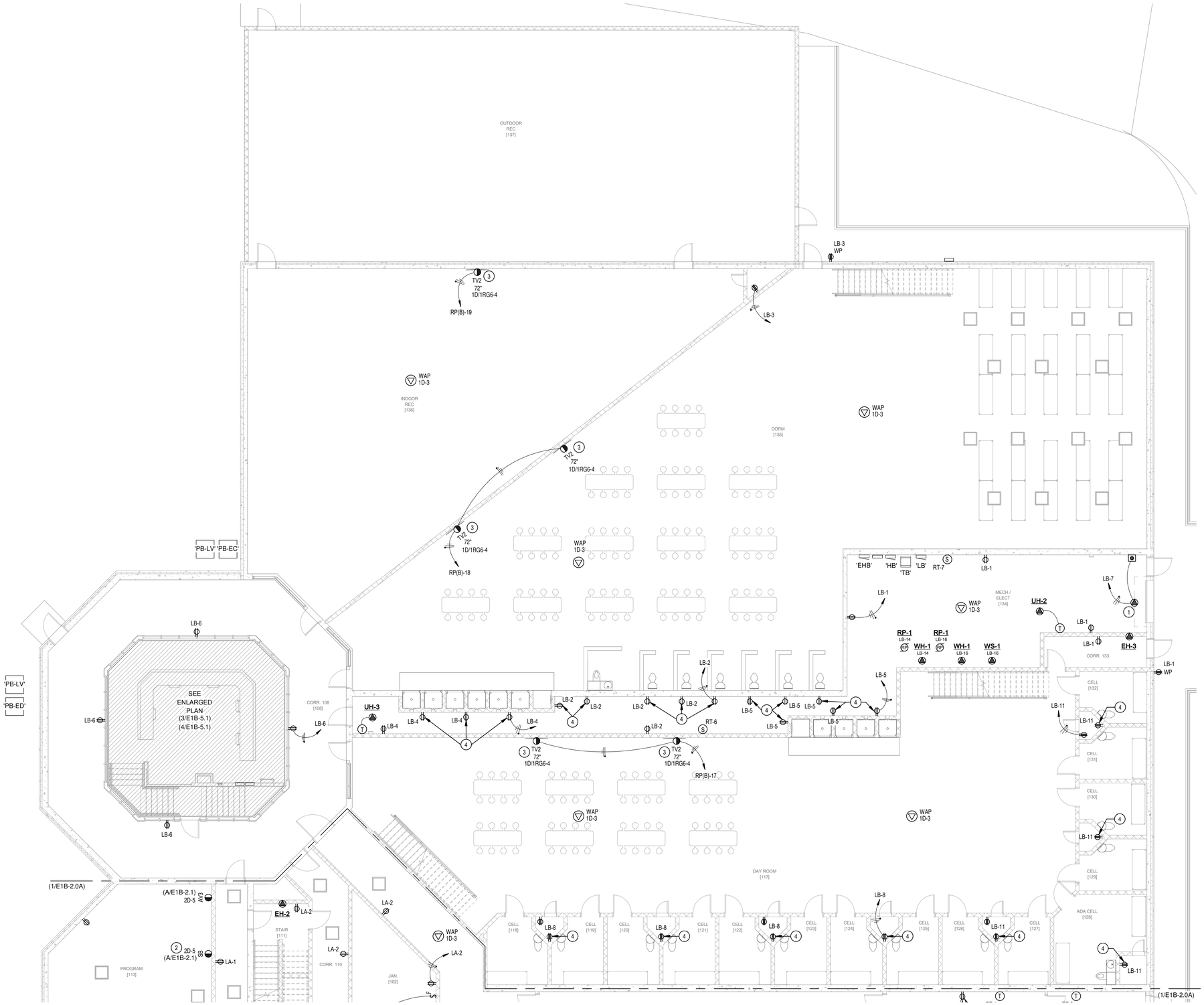

1 MAIN FLOOR POWER/DATA PLAN - AREA 'B'

SCALE: 1/8" = 1'-0"

0" 8' 16'

NORTH

GENERAL NOTES:

A. REFER TO SYMBOL SCHEDULE SHEET FOR PROJECT GENERAL NOTES AND GENERAL NOTES ASSOCIATED WITH THE INSTALLATION OF EACH SYSTEM, INCLUDINB BUT NOT LIMITED TO; LIGHTING, POWER, FIRE ALARM, SPECIAL SYSTEMS, ETC.

CORRECTIONAL FACILITY SPECIAL NOTES:

- ALL WIRING METHODS AND MATERIALS LOCATED IN AREAS ACCESSIBLE TO INMATES SHALL BE TAMPER-PROOF AND UL LISTED FOR USE IN THE ENVIRONMENT.
- ALL WIRE DEVICE COVERPLATES IN AREAS ACCESSIBLE TO INMATES SHALL BE TAMPER-PROOF & UL LISTED FOR THE LOCATION; KENALL MIGHT MAC SERIES; MODEL WSP/WPP-6 FASTENERS: TORX T-20 HEAD W/ CENTER PIN.
- SURFACE MOUNTED RACEWAY, DEVICES, ETC. IN ANY AREAS ACCESSIBLE TO INMATES IS PROHIBITED.

PRECAST CONCRETE ELECTRICAL ROUGH-IN:

- THIS BUILDING WILL BE CONSTRUCTED UTILIZING PRECAST CONCRETE PANELS. THE ELEC. CONTRACTOR IS REPSONSIBLE FOR COORDINATING WITH THE PRECASTER AND G.C. ALL LOCATIONS FOR RECESSED BOXES, CONDUIT SLEEVES, ETC. REQUIRED FOR INSTALLATION OF THE ELECTRICAL SYSTEMS INDICATED IN THE CONTRACT DOCUMENTS.
- THE ELECT. CONTRACTOR SHALL INCLUDE IN BASE BID ALL ELECTRICAL MATERIALS AND THE COSTS REQUIRED FOR TRAVEL TO THE PRECASTER'S SHOP (MAX 500 MILES FROM PROJECT LOCATION) FOR THE INSTALLATION OF THE ELECT. BOXES, CONDUITS, & ETC. PRIOR TO POURING OF THE PRECAST PANELS.
- SURFACE MOUNTED DEVICES, CONDUIT, ETC. IS PROHIBITED IN ALL AREAS ACCESSIBLE TO INMATES. ANY AND ALL SURFACE MOUNTED INSTALLATIONS SHALL BE PRE-APPROVED BY THE OWNER/ARCHITECT PRIOR TO INSTALLATION.

(#) KEY NOTES:

1. CONNECTION TO OVERHEAD DOOR MOTOR, COORDINATE CONNECTION WITH EQUIPMENT PRIOR TO ROUGH-IN. PROVIDE CONDUIT AND CONDUCTORS TO PUSH-BUTTON STATION PER MANUFACTURERS REQUIREMENTS. DOOR SHALL BE CONTROLLED BY JAIL SECURITY SYSTEM, COORDINATE INTERCONNECTIONS WITH JAIL SECURITY INTEGRATION CONTRACTOR.
2. 3-GANG BOX WITH POWER/DATA FOR SMARTBOARD, E.C. SHALL BE RESPONSIBLE FOR COORDINATING BOX LOCATION AND MOUNTING HEIGHT WITH SMARTBOARD AND OWNER PRIOR TO ROUGH-IN. SEE DETAIL AND SCHEDULE FOR ADDITIONAL INFORMATION.
3. INSTALL TV OUTLET BEHIND OR WITHIN TAMPER RESISTANT TV ENCLOSURE(BY OTHERS). E.C. SHALL COORDINATE EXACT MOUNTING HEIGHT OF TV OUTLET WITH ENCLOSURE PRIOR TO ROUGH-IN.
4. E.C. SHALL PROVIDE AND INSTALL RECEPTACLE FOR PLUMBING FIXTURE ELECTRONIC METERING CONTROL VALVE, COORDINATE EXACT LOCATION WITH P.C. PRIOR TO ROUGH-IN.

KEY PLAN:

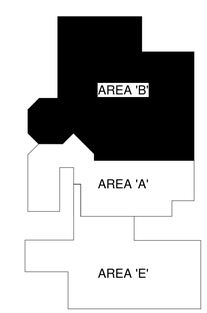

PROFESSIONAL ENGINEER REGISTERED 13053 02/14/25 STATE OF IDAHO SHAWN A. MEADOR

PROJECT #: 2496

PAYNE Engineering Inc.
Consulting Engineers
1823 E. Center
Pocatello, Idaho 83201
tel (208) 232-4439
www.payneengineeringinc.com

DATE	REVISION
02/14/2025	ISSUED FOR PERMIT

PHASE 1 PART B FOR:
TWIN FALLS COUNTY - WRIGHT AVE JAIL
2515 Wright Ave, Twin Falls, ID 83301
MAIN FLOOR POWER/DATA PLAN - AREA 'B'

Laughlin Ricks Architecture
architecture/planning
134 3RD AVE. E. * Twin Falls, Idaho 83301
PHONE: (208) 736-8050

DATE: 02/14/25

SAM Drawn | TEP Checked

#23029 PROJECT #

E1B-2.0B

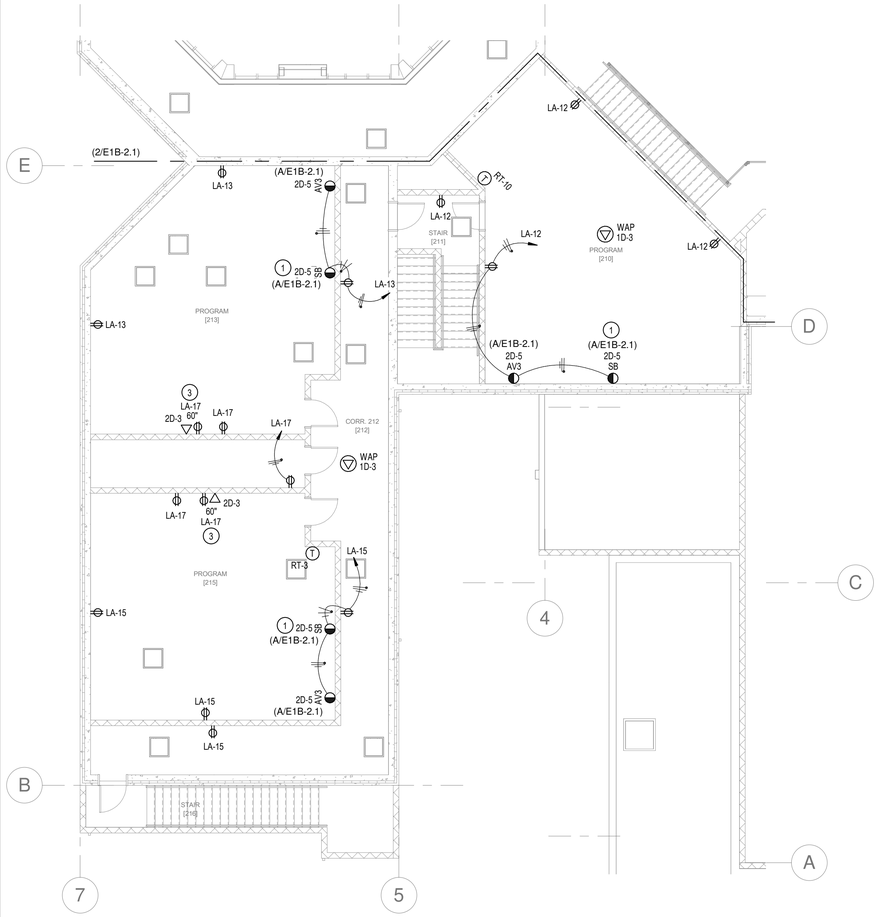

1 MEZZANINE POWER/DATA PLAN - AREA 'A'

SCALE: 1/8" = 1'-0"

0" 8' 16'

NORTH

ELECTRICAL AV/TV BOX SCHEDULE

ID	DESCRIPTION	MFGR.	PART #'s	NOTES
AV3	LARGE CAPACITY 3-GANG AV BOX W/ MUDRING, LV DIVIDER AND COVERPLATE.	HUBBELL	HBL263/HBL79*/HBL981	2,3,4
SB	LARGE CAPACITY 3-GANG BOX W/ MUDRING, LV DIVIDER AND COVERPLATE FOR SMARTBOARD.	HUBBELL	HBL263/HBL79*/HBL981	1,2,3,4
TV2	2-GANG AV WALL BOXES WITH DIVIDER & RECESSED 120V RECPT., DATA & RG6 CONNECTIONS	HUBBELL	HBL985/RR1514W	1,3,4

AV & LOW VOLTAGE BOX SCHEDULE NOTES:

1. E.C. SHALL FIELD VERIFY EXACT LOCATION & MOUNTING HEIGHT WITH SMARTBOARD OR TV AND OWNER PRIOR TO ROUGH-IN.
2. PROVIDE LV CONDUIT(S) AS INDICATED ON DRAWINGS TO ACCESSIBLE CEILING SPACE FOR ROUTING OF DATA AND/OR LOW VOLTAGE CABLING.
3. PROVIDE REQUIRED MUDRINGS, TERMINATIONS, COVERPLATES, INSERTS AND ETC FOR COMPLETE INSTALLATION.
4. PROVIDE 120V/20A DUPLEX RECEPTACLE, DATA INSERT AND BRUSH PASSTHROUGH INSERT, REFER TO DETAIL.

PRECAST CONCRETE ELECTRICAL ROUGH-IN:

- THIS BUILDING WILL BE CONSTRUCTED UTILIZING PRECAST CONCRETE PANELS. THE ELEC. CONTRACTOR IS REPSONSIBLE FOR COORDINATING WITH THE PRECASTER AND G.C. ALL LOCATIONS FOR RECESSED BOXES, CONDUIT SLEEVES, ETC. REQUIRED FOR INSTALLATION OF THE ELECTRICAL SYSTEMS INDICATED IN THE CONTRACT DOCUMENTS.
- THE ELECT. CONTRACTOR SHALL INCLUDE IN BASE BID ALL ELECTRICAL MATERIALS AND THE COSTS REQUIRED FOR TRAVEL TO THE PRECASTER'S SHOP (MAX 500 MILES FROM PROJECT LOCATION) FOR THE INSTALLATION OF THE ELECT. BOXES, CONDUITS, & ETC. PRIOR TO POURING OF THE PRECAST PANELS.
- SURFACE MOUNTED DEVICES, CONDUIT, ETC. IS PROHIBITED IN ALL AREAS ACCESSIBLE TO INMATES. ANY AND ALL SURFACE MOUNTED INSTALLATIONS SHALL BE PRE-APPROVED BY THE OWNER/ARCHITECT PRIOR TO INSTALLATION.

GENERAL NOTES:

A. REFER TO SYMBOL SCHEDULE SHEET FOR PROJECT GENERAL NOTES AND GENERAL NOTES ASSOCIATED WITH THE INSTALLATION OF EACH SYSTEM, INCLUDINB BUT NOT LIMITED TO; LIGHTING, POWER, FIRE ALARM, SPECIAL SYSTEMS, ETC.

CORRECTIONAL FACILITY SPECIAL NOTES:

- ALL WIRING METHODS AND MATERIALS LOCATED IN AREAS ACCESSIBLE TO INMATES SHALL BE TAMPER-PROOF AND UL LISTED FOR USE IN THE ENVIRONMENT.
- ALL WIRE DEVICE COVERPLATES IN AREAS ACCESSIBLE TO INMATES SHALL BE TAMPER-PROOF & UL LISTED FOR THE LOCATION; KENALL MIGHT MAC SERIES; MODEL WSP/WPP-6 FASTENERS: TORX T-20 HEAD W/ CENTER PIN.
- SURFACE MOUNTED RACEWAY, DEVICES, ETC. IN ANY AREAS ACCESSIBLE TO INMATES IS PROHIBITED.

KEY NOTES:

1. 3-GANG BOX WITH POWER/DATA FOR SMARTBOARD, E.C. SHALL BE RESPONSIBLE FOR COORDINATING BOX LOCATION AND MOUNTING HEIGHT WITH SMARTBOARD AND OWNER PRIOR TO ROUGH-IN. SEE DETAIL AND SCHEDULE FOR ADDITIONAL INFORMATION.
2. E.C. SHALL PROVIDE AND INSTALL RECEPTACLE FOR PLUMBING FIXTURE ELECTRONIC METERING CONTROL VALVE, COORDINATE EXACT LOCATION WITH P.C. PRIOR TO ROUGH-IN.
3. PROVIDE AND INSTALL POWER/DATA AT HEIGHT INDICATED FOR FUTURE MONITOR, FIELD LOCATE WITH OWNER PRIOR TO ROUGH-IN.

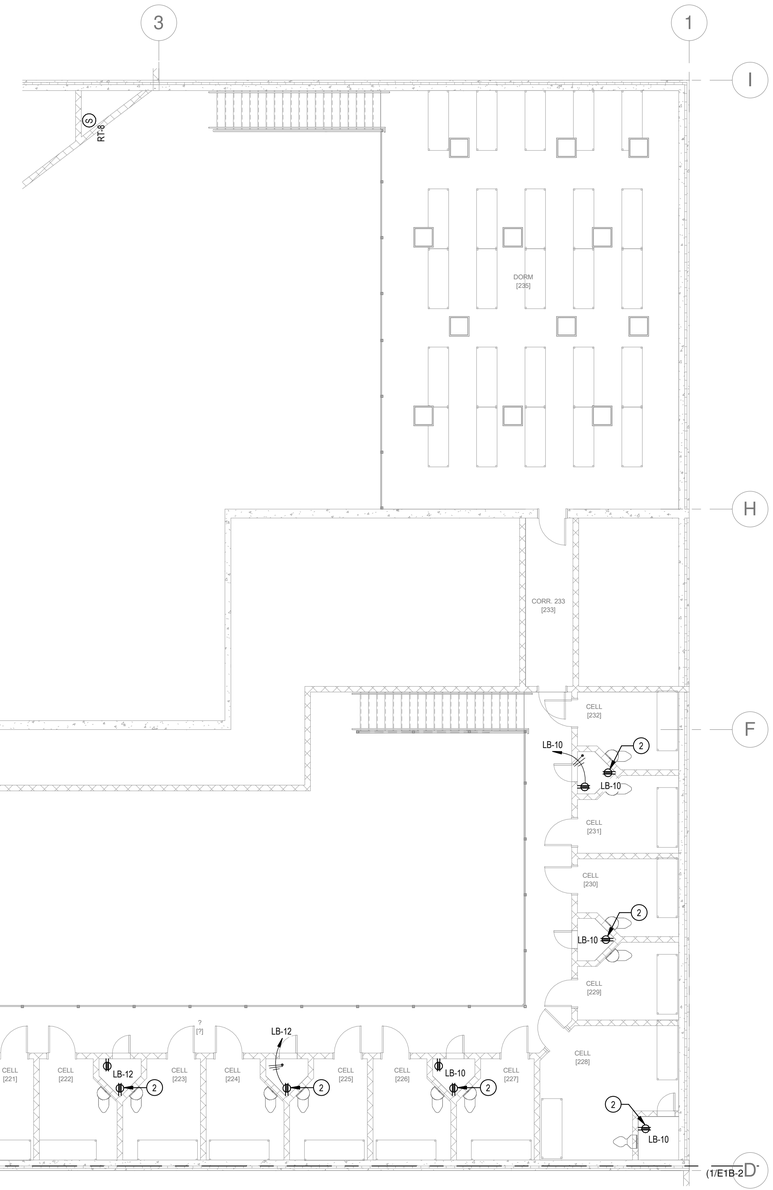

2 MEZZANINE POWER/DATA PLAN - AREA 'B'

SCALE: 1/8" = 1'-0"

0" 8' 16'

NORTH

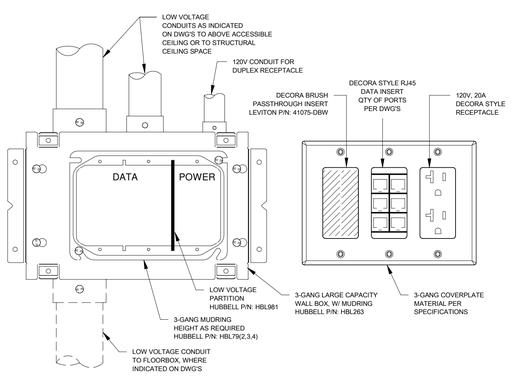

A 'SB' / 'AV3' 3-GANG BOX DETAIL

SCALE: NONE

KEY PLAN:

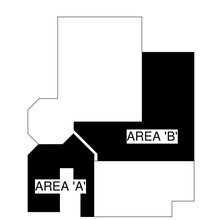

PROFESSIONAL ENGINEER REGISTERED 13053 02/14/25 STATE OF IDAHO SHAWN A. MEADOR

PROJECT #: 2496

PAYNE Engineering Inc.
Consulting Engineers
1823 E. Center
Pocatello, Idaho 83201
tel (208) 232-4439
www.payneengineeringinc.com

DATE	REVISION
02/14/2025	ISSUED FOR PERMIT

PHASE 1 PART B FOR:
TWIN FALLS COUNTY - WRIGHT AVE JAIL
2515 Wright Ave, Twin Falls, ID 83301
MEZZANINE POWER/DATA PLANS

Laughlin Ricks Architecture
architecture/planning
134 3RD AVE. E. * Twin Falls, Idaho 83301
PHONE: (208) 736-8050

DATE: 02/14/25
SAM Drawn
TEP Checked
#23029 PROJECT #

E1B-2.1

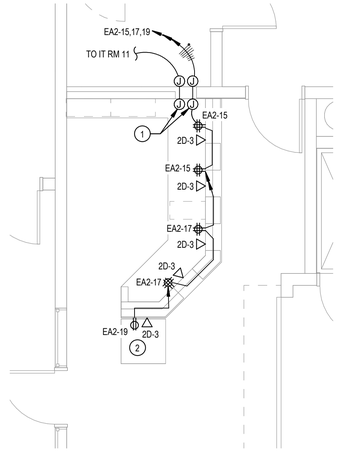

A ENLARGED BOOKING DESK POWER/DATA PLAN
SCALE: 1/4" = 1'-0"

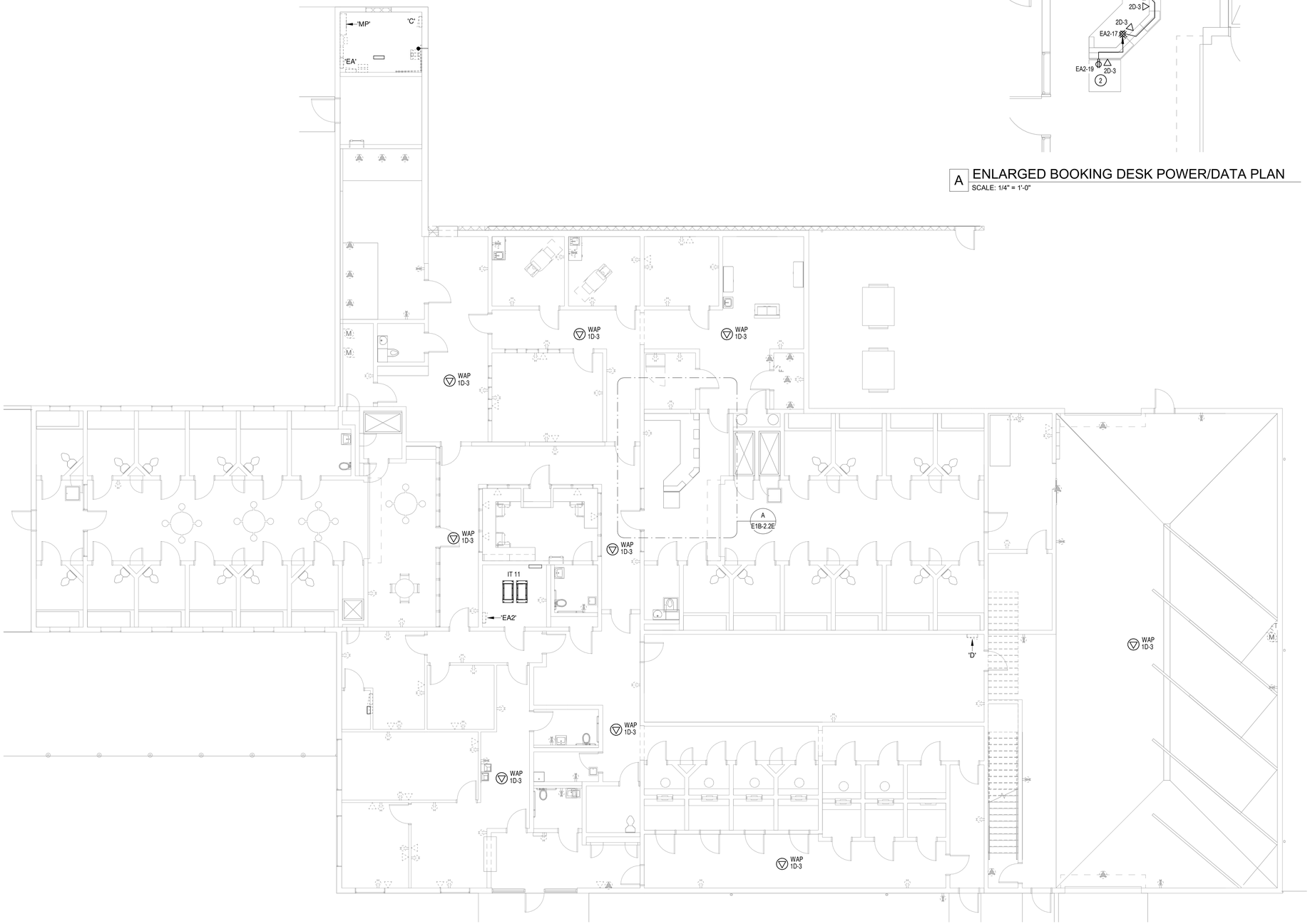

1 MAIN FLOOR POWER PLAN - AREA 'E'
SCALE: 1/8" = 1'-0"

0" 8' 16'
NORTH

GENERAL NOTES:

A. REFER TO SYMBOL SCHEDULE SHEET FOR PROJECT GENERAL NOTES AND GENERAL NOTES ASSOCIATED WITH THE INSTALLATION OF EACH SYSTEM, INCLUDINB BUT NOT LIMITED TO; LIGHTING, POWER, FIRE ALARM, SPECIAL SYSTEMS, ETC.

CORRECTIONAL FACILITY SPECIAL NOTES:

- ALL WIRING METHODS AND MATERIALS LOCATED IN AREAS ACCESSIBLE TO INMATES SHALL BE TAMPER-PROOF AND UL LISTED FOR USE IN THE ENVIRONMENT.
- ALL WIRE DEVICE COVERPLATES IN AREAS ACCESSIBLE TO INMATES SHALL BE TAMPER-PROOF & UL LISTED FOR THE LOCATION; KENALL MIGHT MAC SERIES; MODEL WSP/WPP-6 FASTENERS: TORX T-20 HEAD W/ CENTER PIN.
- SURFACE MOUNTED RACEWAY, DEVICES, ETC. IN ANY AREAS ACCESSIBLE TO INMATES IS PROHIBITED.

KEY NOTES:

1 SURFACE MOUNTED RACEWAY IS PROHIBITED IN BOOKING AREA, E.C. SHALL UTILIZE MED. STORAGE ROOM FOR ROUTING OF CONDUIT/CONDUCTORS FOR POWER & DATA CONNECTIONS IN BOOKING DESK. PROVIDE AND INSTALL J-BOXES ON EA. SIDE OF EXISTING CMU WALL FOR ROUTING OF CIRCUITS & DATA CABLING. COORDINATE WITH MILLWORK AND MILLWORK CONTRACTOR PRIOR TO ROUGH-IN.

2 PROVIDE POWER/DATA CONNECTION TO FINGER PRINT MACHINE, COORDINATE REQUIREMENTS WITH EQUIPMENT/OWNER PRIOR TO ROUGH-IN.

KEY PLAN:

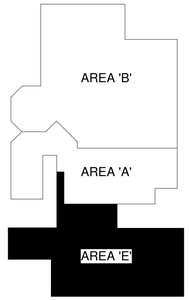

PROFESSIONAL ENGINEER REGISTERED 13053 02/14/25 STATE OF IDAHO SHAWN A. MEADOR

PROJECT #: 2496

PAYNE Engineering Inc.
Consulting Engineers
1823 E. Center
Pocatello, Idaho 83201
tel (208) 232-4439
www.payneengineeringinc.com

DATE	REVISION
02/14/2025	ISSUED FOR PERMIT

PHASE 1 PART B FOR:
TWIN FALLS COUNTY - WRIGHT AVE JAIL
2515 Wright Ave, Twin Falls, ID 83301
MAIN FLOOR POWER/DATA PLAN - AREA 'E'

Laughlin Ricks Architecture
architecture/planning
134 3RD AVE. E. * Twin Falls, Idaho 83301
PHONE: (208) 736-8050

DATE: 02/14/25
SAM (Drawn) TEP (Checked)
#23029 PROJECT #

E1B-2.2E

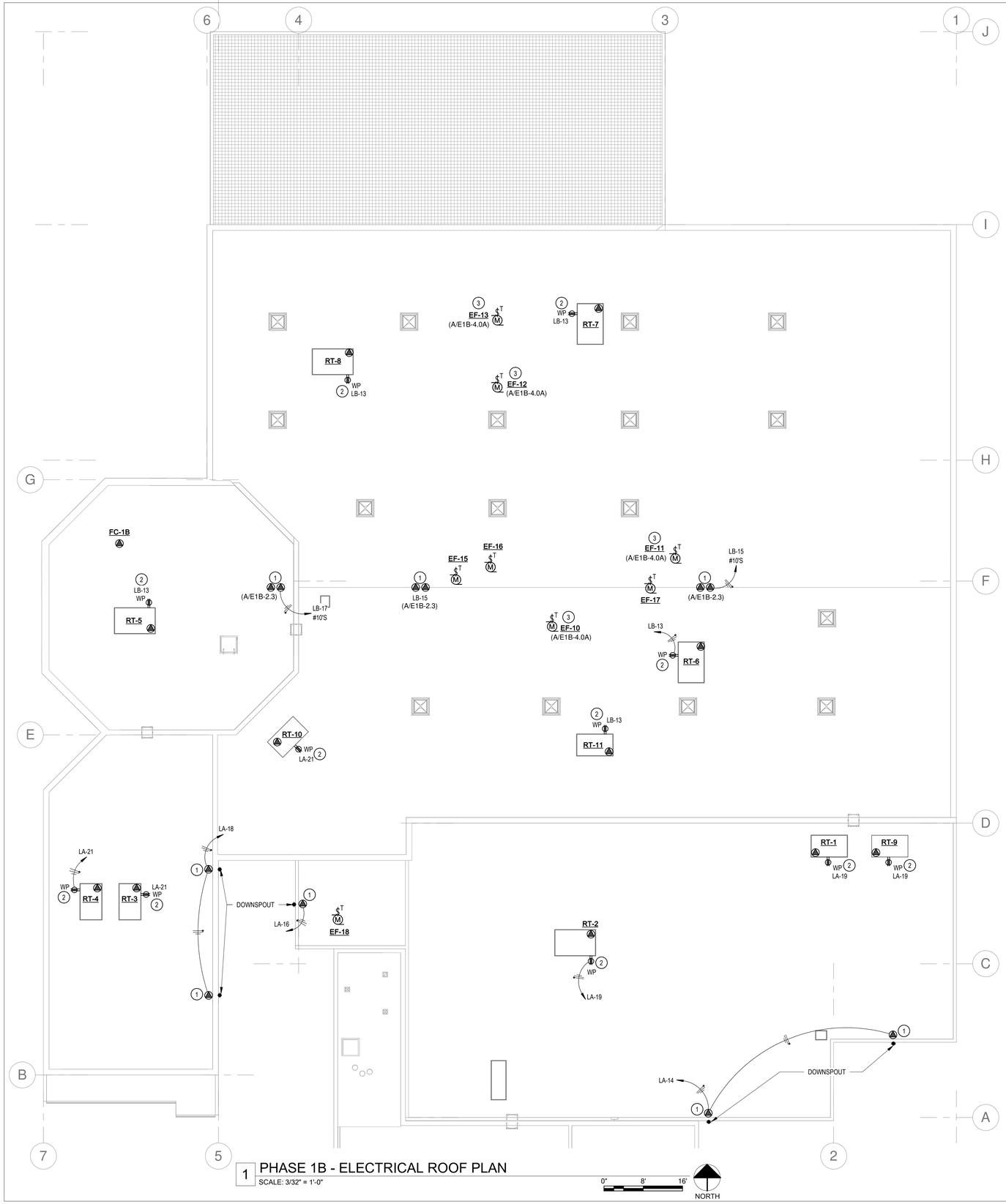

1 PHASE 1B - ELECTRICAL ROOF PLAN

SCALE: 3/32" = 1'-0"

MECH. - ROOFTOP UNIT SCHEDULE - PH1B

EQUIP. ID	VOLTS / PH.	MCA	MOCP	CIRCUIT	FEEDER	DISCONNECT	NOTES
RT-1	480 V / 3 PH.	11 A	15 A	HA - 19,21,23	3/4"C., 3#12 + GND	W/ UNIT	5
RT-2	480 V / 3 PH.	29 A	35 A	HA - 25,27,29	3/4"C, 3#8 + GND	W/ UNIT	5
RT-3	480 V / 3 PH.	14 A	20 A	HA - 31,33,35	3/4"C., 3#12 + GND	W/ UNIT	5
RT-4	480 V / 3 PH.	14 A	20 A	HA - 37,39,41	3/4"C., 3#12 + GND	W/ UNIT	5
RT-5	480 V / 3 PH.	29 A	35 A	HA - 20,22,24	3/4"C, 3#8 + GND	W/ UNIT	5
RT-6	480 V / 3 PH.	34 A	40 A	HB - 25,27,29	3/4"C, 3#8 + GND	W/ UNIT	5
RT-7	480 V / 3 PH.	34 A	40 A	HB - 31,33,35	3/4"C, 3#8 + GND	W/ UNIT	5
RT-8	480 V / 3 PH.	29 A	35 A	HB - 37,39,41	3/4"C, 3#8 + GND	W/ UNIT	5
RT-9	480 V / 3 PH.	11 A	15 A	HA - 26,28,30	3/4"C., 3#12 + GND	W/ UNIT	5
RT-10	480 V / 3 PH.	11 A	15 A	HA - 32,34,36	3/4"C., 3#12 + GND	W/ UNIT	5
RT-11	480 V / 3 PH.	48 A	50 A	HB - 43,45,47	3/4"C, 3#8 + GND	W/ UNIT	5

MECH. - EXHAUST FAN SCHEDULE - PH1B

EQUIP. ID	VOLTS / PH.	HP	WATTS	FLA	CIRCUIT	FEEDER	CONTROL	NOTES
EF-1	120 V / 1 PH.	N/A	100 W	1 A	LA - 27	1/2"C,2#12 + GND	W/ LIGHTS	
EF-2	120 V / 1 PH.	N/A	100 W	1 A	LA - 27	1/2"C,2#12 + GND	W/ LIGHTS	
EF-3	120 V / 1 PH.	N/A	100 W	1 A	LA - 27	1/2"C,2#12 + GND	W/ LIGHTS	
EF-4	120 V / 1 PH.	N/A	127 W	1 A	LA - 27	1/2"C,2#12 + GND	PROGRAMMABLE TIMER SWITCH	
EF-5	120 V / 1 PH.	N/A	100 W	1 A	LK - 1	1/2"C,2#12 + GND	W/ LIGHTS	
EF-6	120 V / 1 PH.	1/6		4 A	LA - 7	1/2"C,2#12 + GND	WALL WTIMER SWITCH	2
EF-9	120 V / 1 PH.	N/A	127 W	1 A	LA - 20	1/2"C,2#12 + GND	PROGRAMMABLE TIMER SWITCH	
EF-10	120 V / 1 PH.	1/2		10 A	ELA - 1	3/4"C, 2#8 + GND	FIRE ALARM & (JSS) CONTROL ROOM	2,8
EF-11	120 V / 1 PH.	1/2		10 A	ELA - 3	3/4"C, 2#10 + GND	FIRE ALARM & (JSS) CONTROL ROOM	2,8
EF-12	120 V / 1 PH.	1/2		10 A	ELA - 5	3/4"C, 2#10 + GND	FIRE ALARM & (JSS) CONTROL ROOM	2,8
EF-13	120 V / 1 PH.	1/2		10 A	ELA - 7	3/4"C, 2#10 + GND	FIRE ALARM & (JSS) CONTROL ROOM	2,8
EF-14	120 V / 1 PH.	N/A	100 W	1 A	ECR - 3	1/2"C,2#12 + GND	W/ LIGHTS	
EF-15	120 V / 1 PH.	1/6		4 A	LB - 20	1/2"C, 2#10, #10G	24/7 CONTINUOUS	2
EF-16	120 V / 1 PH.	1/6		4 A	LB - 22	1/2"C,2#12 + GND	24/7 CONTINUOUS	2
EF-17	120 V / 1 PH.	1/6		4 A	LB - 20	1/2"C, 2#10, #10G	24/7 CONTINUOUS	2
EF-18	120 V / 1 PH.	1/6		4 A	LA - 29	1/2"C,2#12 + GND	COOLING STAT	2

MECH. - SPLIT SYSTEM A/C UNIT SCHEDULE - PH1B

EQUIP. ID	VOLTS / PH.	MCA	MOCP	CIRCUIT	FEEDER	DISCONNECT	NOTES
INDOOR UNIT							
FC-1A	208 V / 1 PH.	1 A	0 A		PER MFGR	0 A - N/A	4
OUTDOOR UNIT							
FC-1B	208 V / 1 PH.	25 A	30 A	ECR - 39,41	1/2"C.,2#10+1#10G	30 A - FUSED/3R	3,4

MECHANICAL SCHEDULE NOTES:

1. CIRCUIT AND CONTROL EXHAUST FAN WITH ROOM LIGHTING CIRCUIT.
2. E.C. SHALL PROVIDE LOCAL DISCONNECT RATED, THERMAL-OVERLOAD SWITCH FOR EQUIPMENT; SWITCH RATING SHALL NOT BE LESS THEN CIRCUIT BREAKER SUPPLYING EQUIPMENT.
3. E.C. SHALL PROVIDE LOCAL DISCONNECT SWITCH FOR EQUIPMENT; SIZE AND TYPE AS INDICATED IN SCHEDULE. IF FUSED DISCONNECT IS SPECIFIED FOR EQUIPMENT, FUSE PER EQUIPMENT NAMEPLATE RATING.
4. INDOOR UNIT IS POWERED FROM OUTDOOR UNIT; COORDINATE EXACT NUMBER OF CONDUCTORS BETWEEN UNITS WITH M.C. PRIOR TO ROUGH-IN.
5. EQUIPMENT IS FACTORY SUPPLYED WITH DISCONNECT AND CONVIENENCE OUTLET; E.C. SHALL PROVIDE ALL NECESSARY CONNECTIONS.
6. INTERLOCK WITH ASSOCIATED MOTORIZED DAMPER AS DIRECTED BY M.C.
7. CONTROL FAN WITH DEDICATED LINE-VOLTAGE OCC. SENSOR, SET 30 MIN. TIME DELAY.
8. SMOKE EVACUATION FAN SHALL BE CONROLLED BY FIRE ALARM SYSTEM W/ OVERRIDE BY JAIL SECURITY SYSTEM AT CONTROL ROOM, ROUTE CIRCUIT THROUGH RELAY PANEL LOCATED NEXT TO PANEL.

GENERAL NOTES:

A. REFER TO SYMBOL SCHEDULE SHEET FOR PROJECT GENERAL NOTES AND GENERAL NOTES ASSOCIATED WITH THE INSTALLATION OF EACH SYSTEM, INCLUDINB BUT NOT LIMITED TO; LIGHTING, POWER, FIRE ALARM, SPECIAL SYSTEMS, ETC.

KEY NOTES:

1 PROVIDE HEAT TRACING OF ROOF AND OVERFLOW DRAINS. COIL HEAT TAPE AROUND ROOF AND OVERFLOW DRAINS AND EXTEND INTO DRAIN. WHERE DRAIN PIPES EXTEND INTO UNCONDITIONED SPACE, HEAT TRACE SHALL EXTEND DOWN PIPE AND OUT END OF DOWNSPOUT APPROX. 6". EXACT TAPE LENGTH TO BE DETERMINED IN FIELD. UTILIZE RAYCHEM 120V, GM-1XT CABLE. PROVIDE ALL COMPONENTS FOR A COMPETE INSTALLATION INCLUDING BUT NOT LIMITED TO: POWER CONNECTOR, JUNCTION BOX, CABLE END SEALS, CABLE SUPPORT CLIPS, ETC. COORDINATE ALL ROOF PENETRATIONS WITH ROOF CONTRACTOR TO PROVIDE PROPER FLASHING AND SEALING OF PENETRATIONS. UTILIZE GFEPD TYPE CIRCUIT BREAKERS FOR ALL HEAT TRACE CIRCUITS.

2 RECEPTACLE PROVIDED WITH ROOF TOP UNIT; E.C. SHALL PROVIDE 120V CIRCUIT AS INDICATED.

3 SMOKE EXHAUST FAN SHALL BE CONTROLLED BY BUILDING FIRE ALARM SYSTEM, FAN SHALL BE ACTIVATED WHEN BUILDING FIRE ALARM SYSTEM IS IN ALARM. FAN SHALL ALSO BE OVERRIDDEN BY JAIL SECURITY SYSTEM AT THE CONTROL ROOM. PROVIDE ALL REQUIRED RELAY MODULES, ETC FOR CONTROL OF FAN. COORDINATE WITH M.C.

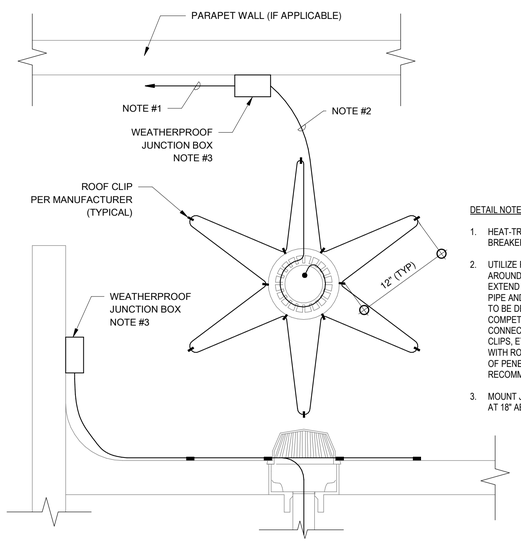

DETAIL NOTES:

1. HEAT-TRACE BRANCH CIRCUIT; BREAKER SHALL BE GFEPD TYPE BREAKER, CIRCUIT AS INIDCATED ON DRAWINGS.
2. UTILIZE RAYCHEM 120V, GM-1XT HEAT TAPE CABLE IN A STAR PATTERN AROUND ROOF DRAIN AND EXTEND INTO DRAIN. WHERE DRAIN PIPES EXTEND INTO UNCONDITIONED SPACE, HEAT TAPE SHALL EXTEND DOWN PIPE AND OUT END OF DOWNSPOUT APPROX. 6". EXACT TAPE LENGTH TO BE DETERMINED IN FIELD. PROVIDE ALL COMPONENTS FOR A COMPETE INSTALLATION INCLUDING BUT NOT LIMITED TO: POWER CONNECTOR, JUNCTION BOX, CABLE END SEALS, CABLE SUPPORT CLIPS, ETC. PTEND INTO DRAIN. COORDINATE ALL ROOF PENETRATIONS WITH ROOF CONTRACTOR TO PROVIDE PROPER FLASHING AND SEALING OF PENETRATIONS. INSTALL PER MANUFACTURERS RECOMMENDATIONS.
3. MOUNT J-BOX AT 18" ABOVE ROOF ON PARAPET WALL OR STEM MOUNT AT 18" ABOVE ROOF IF NO PARAPET WALL IS AVAILABLE.

A ROOF DRAIN HEAT TRACE DETAIL

SCALE: NONE

PROFESSIONAL ENGINEER REGISTERED 13053 02/14/25 STATE OF IDAHO SHAWN A. MEADOR

PROJECT #: 2496

PAYNE Engineering Inc. Consulting Engineers
1823 E. Center
Pocatello, Idaho 83201
tel (208) 232-4439
www.payneengineeringinc.com

DATE	REVISION
02/14/2025	ISSUED FOR PERMIT

PHASE 1 PART B FOR:
TWIN FALLS COUNTY - WRIGHT AVE JAIL
2515 Wright Ave, Twin Falls, ID 83301
ROOF ELECTRICAL PLAN

Laughlin Ricks Architecture
architecture/planning
134 3RD AVE. E. * Twin Falls, Idaho 83301
PHONE: (208) 736-8050

DATE: 02/14/25
SAM Drawn
TEP Checked
#23029 PROJECT #

E1B-2.3

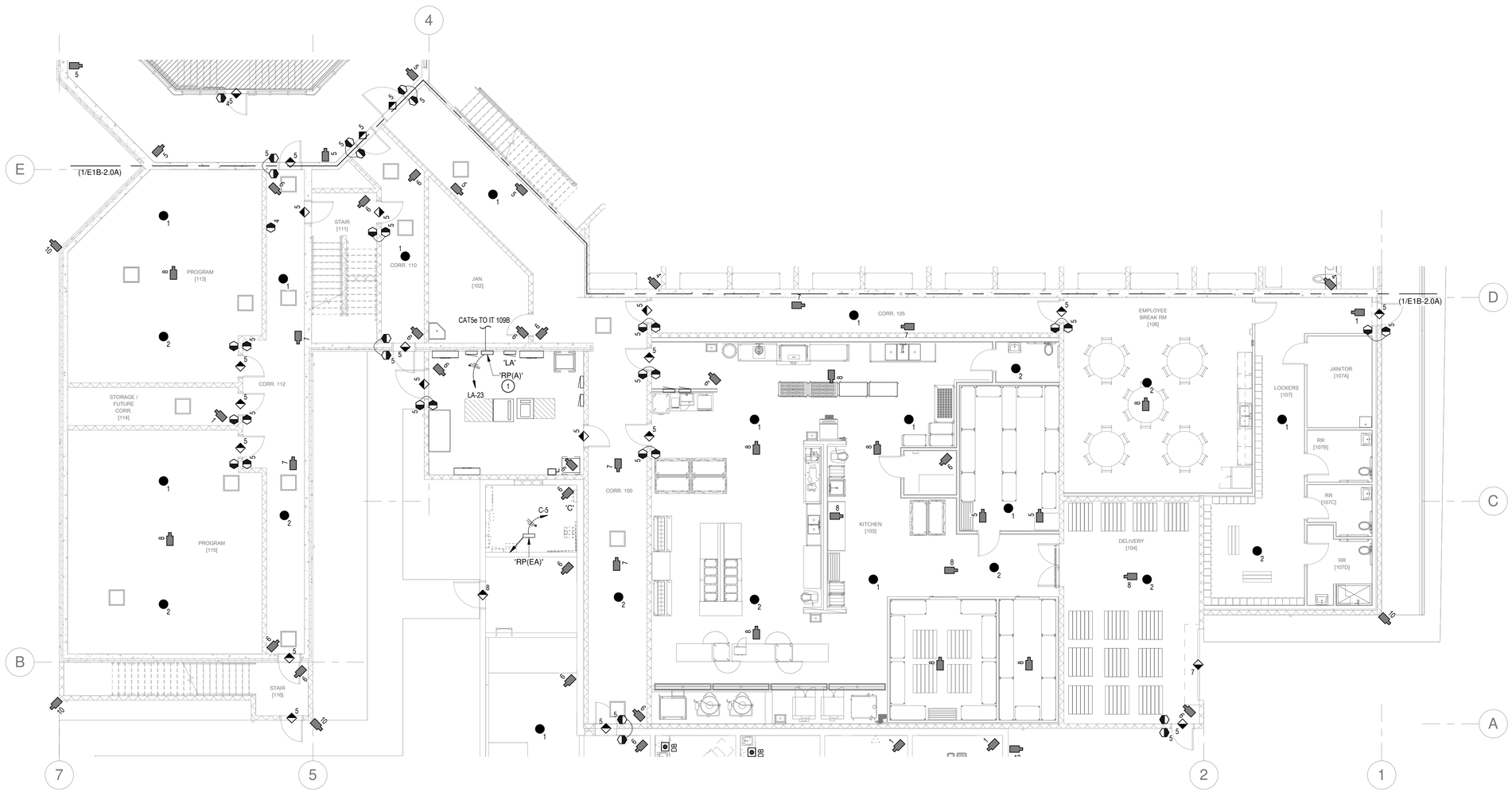

1 MAIN FLOOR SECURITY PLAN - AREA 'A'
SCALE: 1/8" = 1'-0"

0" 8' 16'

NORTH

KEY NOTES:

1 NEW RELAY PANEL FOR CONTROL OF LIGHTING, RECPT., ETC, REFER TO ASSOCIATED RELAY PANEL SCHEDULE FOR ADDITIONAL INFORMATION. RELAY PANELS SHALL BE NETWORKED TOGETHER AND CONNECTED TO THE JAIL SECURITY SYSTEM FOR CONTROL. CAT 5e BETWEEN PANELS AS REQUIRED FOR NETWORKING AND CAT5e TO IT RM 109B FOR CONNECTION TO JAIL SECURITY SYSTEM. PROVIDE REQUIRED MODULE(S) FOR INTEGRATION WITH JAIL SECURITY SYSTEM, COORDINATE WITH JAIL SECURITY SYSTEM INTEGRATION CONTRACTOR PRIOR TO ORDERING.

JAIL CONTROL & SECURITY SYSTEMS:

- THE JAIL SECURITY SYSTEM INFORMATION MANAGEMENT & CONTROLS SYSTEM SHALL BE:
  PEREGRINE CONTROL INTERFACE PLATFORM
  OR APPROVED EQUAL
  SEE SPECIFICATION SECTION 28 1300 FOR ADDITIONAL INFORMATION. ALTERNATE MANUFACTURER'S SHALL BE SUBMITTED TO 10-DAYS PRIOR TO BID FOR PRE-APPROVAL.
- THE EXISTING JAIL CONTROL/SECURITY SYSTEM LOCATED IN AREA 'E' SHALL BE COMPLETELY REMOVED IN PREPARATION FOR THE NEW SYSTEM, EXISTING CONDUITS, BOXES, ETC MAY BE REUSED IF THEY MEET THE REQUIREMENTS OF THE NEW SYSTEM COMPONENTS.
- NEW SECURITY SYSTEM INCLUDES BUT IS NOT LIMITED TO; TOUCH SCREEN CONTROLS, PLC'S, INTERCOM, DOOR CONTROL, LIGHTING CONTROL, SECURITY CAMERAS, ETC. THE SYSTEM WILL HAVE THE ABILITY FOR FUTURE EXPANSION FOR THE TOTAL BUILD-OUT OF THE PROJECT.
- E.C. SHALL SCHEDULE A COORDINATION MEETING A MINIMUM OF 3-WEEKS PRIOR TO BEGINNING OF ANY ELECTRICAL ROUGH-IN OR MANUFACTURERING OF PRECAST PANEL TO COORDINATE THE ROUGH-IN REQUIREMENTS FOR THE JAIL CONTROL/SECURITY SYSTEM AND COMPONENTS.
  ATTENDEES SHOULD INCLUDE:
  OWNER'S REPRESENTATIVE
  JAIL SECURITY CONTRACTOR
  GENERAL AND ELECTRICAL CONTRACTORS
- REFER TO SHEET E1B-3.4 FOR JAIL SECURITY SYMBOLS, SCHEDULES AND DETAILS.

CORRECTIONAL FACILITY SPECIAL NOTES:

- ALL WIRING METHODS AND MATERIALS LOCATED IN AREAS ACCESSIBLE TO INMATES SHALL BE TAMPER-PROOF AND UL LISTED FOR USE IN THE ENVIRONMENT.
- ALL WIRE DEVICE COVERPLATES IN AREAS ACCESSIBLE TO INMATES SHALL BE TAMPER-PROOF & UL LISTED FOR THE LOCATION; KENALL MIGHT MAC SERIES; MODEL WSP/WPP-6 FASTENERS: TORX T-20 HEAD W/ CENTER PIN.
- SURFACE MOUNTED RACEWAY, DEVICES, ETC. IN ANY AREAS ACCESSIBLE TO INMATES IS PROHIBITED.

PRECAST CONCRETE ELECTRICAL ROUGH-IN:

- THIS BUILDING WILL BE CONSTRUCTED UTILIZING PRECAST CONCRETE PANELS. THE ELEC. CONTRACTOR IS REPSONSIBLE FOR COORDINATING WITH THE PRECASTER AND G.C. ALL LOCATIONS FOR RECESSED BOXES, CONDUIT SLEEVES, ETC. REQUIRED FOR INSTALLATION OF THE ELECTRICAL SYSTEMS INDICATED IN THE CONTRACT DOCUMENTS.
- THE ELECT. CONTRACTOR SHALL INCLUDE IN BASE BID ALL ELECTRICAL MATERIALS AND THE COSTS REQUIRED FOR TRAVEL TO THE PRECASTER'S SHOP (MAX 500 MILES FROM PROJECT LOCATION) FOR THE INSTALLATION OF THE ELECT. BOXES, CONDUITS, & ETC. PRIOR TO POURING OF THE PRECAST PANELS.
- SURFACE MOUNTED DEVICES, CONDUIT, ETC. IS PROHIBITED IN ALL AREAS ACCESSIBLE TO INMATES. ANY AND ALL SURFACE MOUNTED INSTALLATIONS SHALL BE PRE-APPROVED BY THE OWNER/ARCHITECT PRIOR TO INSTALLATION.

KEY PLAN:

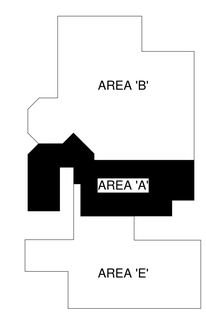

PROFESSIONAL ENGINEER REGISTERED 13053 02/14/25 STATE OF IDAHO SHAWN A. MEADOR

PROJECT #: 2496

PAYNE Engineering Inc.
Consulting Engineers
1823 E. Center
Pocatello, Idaho 83201
tel (208) 232-4439
www.payneengineeringinc.com

DATE	REVISION
02/14/2025	ISSUED FOR PERMIT

PHASE 1 PART B FOR:
TWIN FALLS COUNTY - WRIGHT AVE JAIL
2515 Wright Ave, Twin Falls, ID 83301
MAIN FLOOR SECURITY PLAN - AREA 'A'

Laughlin Ricks Architecture
architecture/planning
134 3RD AVE. E. * Twin Falls, Idaho 83301
PHONE: (208) 736-8050

DATE: 02/14/25
SAM Drawn
TEP Checked
#23029 PROJECT #

E1B-3.0A

CORRECTIONAL FACILITY SPECIAL NOTES:

- ALL WIRING METHODS AND MATERIALS LOCATED IN AREAS ACCESSIBLE TO INMATES SHALL BE TAMPER-PROOF AND UL LISTED FOR USE IN THE ENVIRONMENT.
- ALL WIRE DEVICE COVERPLATES IN AREAS ACCESSIBLE TO INMATES SHALL BE TAMPER-PROOF & UL LISTED FOR THE LOCATION; KENALL MIGHT MAC SERIES; MODEL WSP/WPP-6 FASTENERS: TORX T-20 HEAD W/ CENTER PIN.
- SURFACE MOUNTED RACEWAY, DEVICES, ETC. IN ANY AREAS ACCESSIBLE TO INMATES IS PROHIBITED.

PRECAST CONCRETE ELECTRICAL ROUGH-IN:

- THIS BUILDING WILL BE CONSTRUCTED UTILIZING PRECAST CONCRETE PANELS. THE ELEC. CONTRACTOR IS REPSONSIBLE FOR COORDINATING WITH THE PRECASTER AND G.C. ALL LOCATIONS FOR RECESSED BOXES, CONDUIT SLEEVES, ETC. REQUIRED FOR INSTALLATION OF THE ELECTRICAL SYSTEMS INDICATED IN THE CONTRACT DOCUMENTS.
- THE ELECT. CONTRACTOR SHALL INCLUDE IN BASE BID ALL ELECTRICAL MATERIALS AND THE COSTS REQUIRED FOR TRAVEL TO THE PRECASTER'S SHOP (MAX 500 MILES FROM PROJECT LOCATION) FOR THE INSTALLATION OF THE ELECT. BOXES, CONDUITS, & ETC. PRIOR TO POURING OF THE PRECAST PANELS.
- SURFACE MOUNTED DEVICES, CONDUIT, ETC. IS PROHIBITED IN ALL AREAS ACCESSIBLE TO INMATES. ANY AND ALL SURFACE MOUNTED INSTALLATIONS SHALL BE PRE-APPROVED BY THE OWNER/ARCHITECT PRIOR TO INSTALLATION.

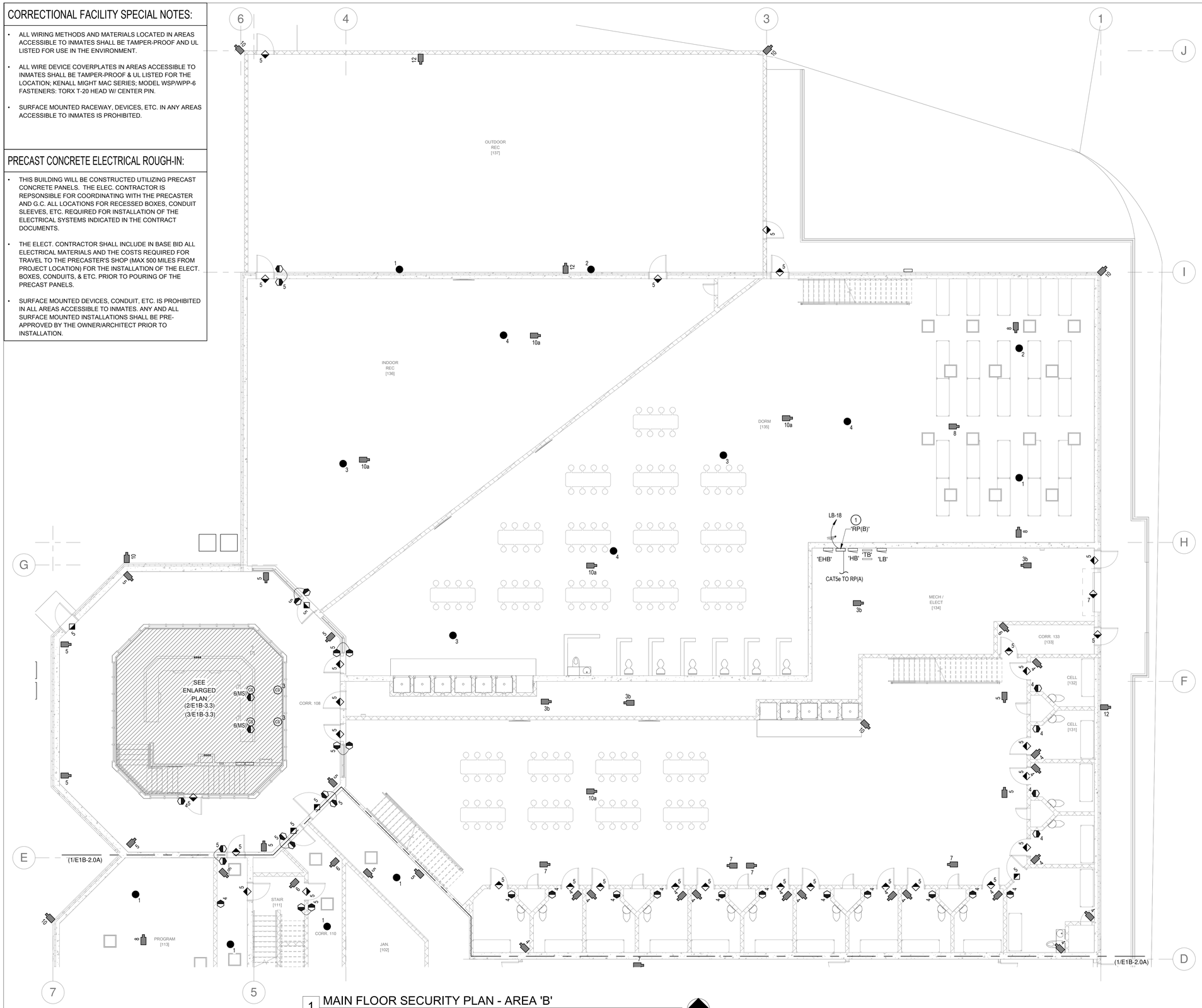

1 MAIN FLOOR SECURITY PLAN - AREA 'B'
SCALE: 1/8" = 1'-0"

0" 8' 16'

NORTH

JAIL CONTROL & SECURITY SYSTEMS:

- THE JAIL SECURITY SYSTEM INFORMATION MANAGEMENT & CONTROLS SYSTEM SHALL BE:
  PEREGRINE CONTROL INTERFACE PLATFORM
  OR APPROVED EQUAL
  SEE SPECIFICATION SECTION 28 1300 FOR ADDITIONAL INFORMATION. ALTERNATE MANUFACTURER'S SHALL BE SUBMITTED TO 10-DAYS PRIOR TO BID FOR PRE-APPROVAL.
- THE EXISTING JAIL CONTROL/SECURITY SYSTEM LOCATED IN AREA 'E' SHALL BE COMPLETELY REMOVED IN PREPARATION FOR THE NEW SYSTEM, EXISTING CONDUITS, BOXES, ETC MAY BE REUSED IF THEY MEET THE REQUIREMENTS OF THE NEW SYSTEM COMPONENTS.
- NEW SECURITY SYSTEM INCLUDES BUT IS NOT LIMITED TO; TOUCH SCREEN CONTROLS, PLC'S, INTERCOM, DOOR CONTROL, LIGHTING CONTROL, SECURITY CAMERAS, ETC. THE SYSTEM WILL HAVE THE ABILITY FOR FUTURE EXPANSION FOR THE TOTAL BUILD-OUT OF THE PROJECT.
- E.C. SHALL SCHEDULE A COORDINATION MEETING A MINIMUM OF 3-WEEKS PRIOR TO BEGINNING OF ANY ELECTRICAL ROUGH-IN OR MANUFACTURERING OF PRECAST PANEL TO COORDINATE THE ROUGH-IN REQUIREMENTS FOR THE JAIL CONTROL/SECURITY SYSTEM AND COMPONENTS.
  ATTENDEES SHOULD INCLUDE:
  OWNER'S REPRESENTATIVE
  JAIL SECURITY CONTRACTOR
  GENERAL AND ELECTRICAL CONTRACTORS
- REFER TO SHEET E1B-3.4 FOR JAIL SECURITY SYMBOLS, SCHEDULES AND DETAILS.

KEY NOTES:

1 NEW RELAY PANEL FOR CONTROL OF LIGHTING, RECPT., ETC, REFER TO ASSOCIATED RELAY PANEL SCHEDULE FOR ADDITIONAL INFORMATION. RELAY PANELS SHALL BE NETWORKED TOGETHER AND CONNECTED TO THE JAIL SECURITY SYSTEM FOR CONTROL. CAT 5e BETWEEN PANELS AS REQUIRED FOR NETWORKING AND CAT5e TO IT RM 109B FOR CONNECTION TO JAIL SECURITY SYSTEM. PROVIDE REQUIRED MODULE(S) FOR INTEGRATION WITH JAIL SECURITY SYSTEM, COORDINATE WITH JAIL SECURITY SYSTEM INTEGRATION CONTRACTOR PRIOR TO ORDERING.

KEY PLAN:

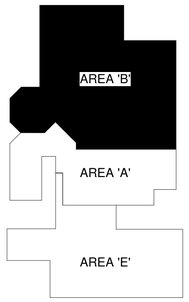

PROFESSIONAL ENGINEER REGISTERED 13053 02/14/25 STATE OF IDAHO SHAWN A. MEADOR

PROJECT #: 2496

PAYNE Engineering Inc.
Consulting Engineers
1823 E. Center
Pocatello, Idaho 83201
tel (208) 232-4439
www.payneengineeringinc.com

DATE	REVISION
02/14/2025	ISSUED FOR PERMIT

PHASE 1 PART B FOR:
TWIN FALLS COUNTY - WRIGHT AVE JAIL
2515 Wright Ave, Twin Falls, ID 83301
MAIN FLOOR SECURITY PLAN - AREA 'B'

Laughlin Ricks Architecture
architecture/planning
134 3RD AVE. E. * Twin Falls, Idaho 83301
PHONE: (208) 736-8050

DATE: 02/14/25
SAM Drawn
TEP Checked
#23029 PROJECT #

E1B-3.0B

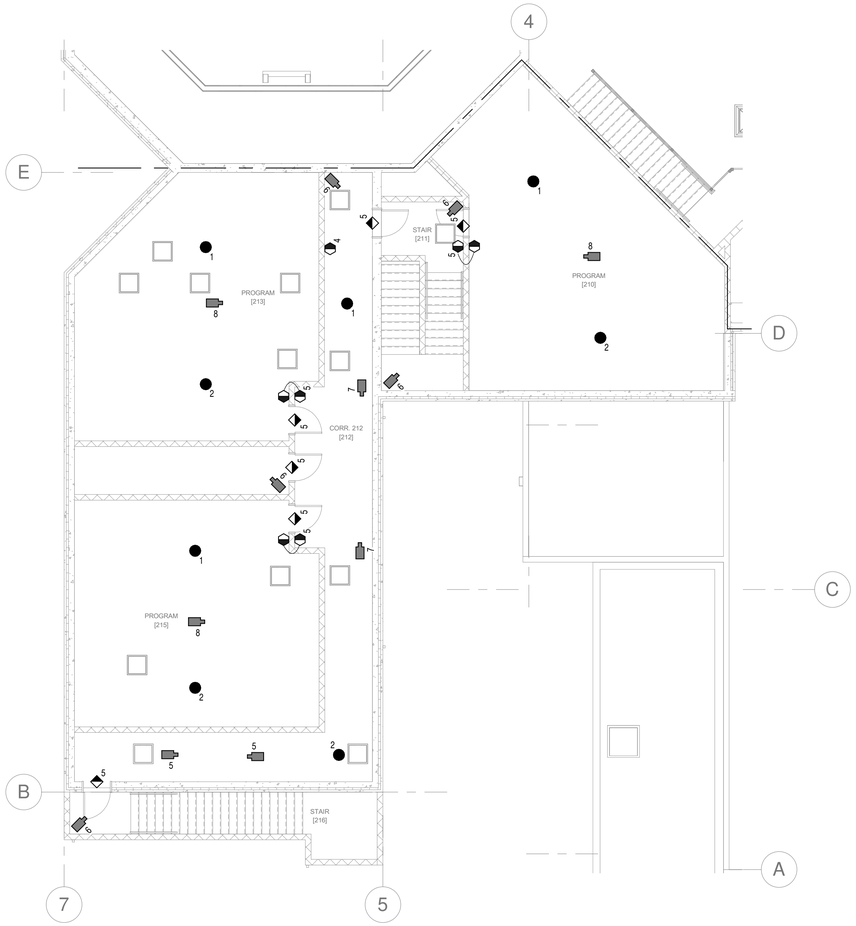

1 MEZZANINE SECURITY PLAN - AREA 'A'
SCALE: 1/8" = 1'-0"

0' 8' 16'
NORTH

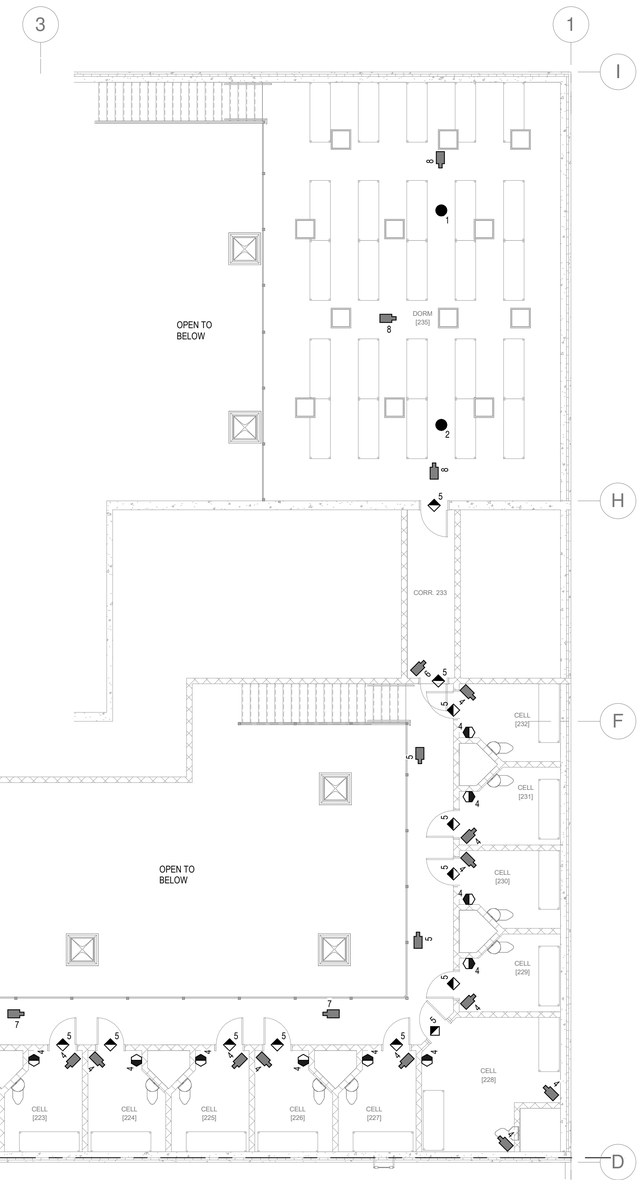

2 MEZZANINE SECURITY PLAN - AREA 'B'
SCALE: 1/8" = 1'-0"

0' 8' 16'
NORTH

PRECAST CONCRETE ELECTRICAL ROUGH-IN:

- THIS BUILDING WILL BE CONSTRUCTED UTILIZING PRECAST CONCRETE PANELS. THE ELEC. CONTRACTOR IS REPSONSIBLE FOR COORDINATING WITH THE PRECASTER AND G.C. ALL LOCATIONS FOR RECESSED BOXES, CONDUIT SLEEVES, ETC. REQUIRED FOR INSTALLATION OF THE ELECTRICAL SYSTEMS INDICATED IN THE CONTRACT DOCUMENTS.
- THE ELECT. CONTRACTOR SHALL INCLUDE IN BASE BID ALL ELECTRICAL MATERIALS AND THE COSTS REQUIRED FOR TRAVEL TO THE PRECASTER'S SHOP (MAX 500 MILES FROM PROJECT LOCATION) FOR THE INSTALLATION OF THE ELECT. BOXES, CONDUITS, & ETC. PRIOR TO POURING OF THE PRECAST PANELS.
- SURFACE MOUNTED DEVICES, CONDUIT, ETC. IS PROHIBITED IN ALL AREAS ACCESSIBLE TO INMATES. ANY AND ALL SURFACE MOUNTED INSTALLATIONS SHALL BE PRE-APPROVED BY THE OWNER/ARCHITECT PRIOR TO INSTALLATION.

JAIL CONTROL & SECURITY SYSTEMS:

- THE JAIL SECURITY SYSTEM INFORMATION MANAGEMENT & CONTROLS SYSTEM SHALL BE:
  PEREGRINE CONTROL INTERFACE PLATFORM
  OR APPROVED EQUAL
  SEE SPECIFICATION SECTION 28 1300 FOR ADDITIONAL INFORMATION. ALTERNATE MANUFACTURER'S SHALL BE SUBMITTED TO 10-DAYS PRIOR TO BID FOR PRE-APPROVAL.
- THE EXISTING JAIL CONTROL/SECURITY SYSTEM LOCATED IN AREA 'E' SHALL BE COMPLETELY REMOVED IN PREPARATION FOR THE NEW SYSTEM, EXISTING CONDUITS, BOXES, ETC MAY BE REUSED IF THEY MEET THE REQUIREMENTS OF THE NEW SYSTEM COMPONENTS.
- NEW SECURITY SYSTEM INCLUDES BUT IS NOT LIMITED TO; TOUCH SCREEN CONTROLS, PLC'S, INTERCOM, DOOR CONTROL, LIGHTING CONTROL, SECURITY CAMERAS, ETC. THE SYSTEM WILL HAVE THE ABILITY FOR FUTURE EXPANSION FOR THE TOTAL BUILD-OUT OF THE PROJECT.
- E.C. SHALL SCHEDULE A COORDINATION MEETING A MINIMUM OF 3-WEEKS PRIOR TO BEGINNING OF ANY ELECTRICAL ROUGH-IN OR MANUFACTURERING OF PRECAST PANEL TO COORDINATE THE ROUGH-IN REQUIREMENTS FOR THE JAIL CONTROL/SECURITY SYSTEM AND COMPONENTS.
  ATTENDEES SHOULD INCLUDE:
  OWNER'S REPRESENTATIVE
  JAIL SECURITY CONTRACTOR
  GENERAL AND ELECTRICAL CONTRACTORS
- REFER TO SHEET E1B-3.4 FOR JAIL SECURITY SYMBOLS, SCHEDULES AND DETAILS.

CORRECTIONAL FACILITY SPECIAL NOTES:

- ALL WIRING METHODS AND MATERIALS LOCATED IN AREAS ACCESSIBLE TO INMATES SHALL BE TAMPER-PROOF AND UL LISTED FOR USE IN THE ENVIRONMENT.
- ALL WIRE DEVICE COVERPLATES IN AREAS ACCESSIBLE TO INMATES SHALL BE TAMPER-PROOF & UL LISTED FOR THE LOCATION; KENALL MIGHT MAC SERIES; MODEL WSP/WPP-6 FASTENERS: TORX T-20 HEAD W/ CENTER PIN.
- SURFACE MOUNTED RACEWAY, DEVICES, ETC. IN ANY AREAS ACCESSIBLE TO INMATES IS PROHIBITED.

KEY NOTES:

KEY PLAN:

PROFESSIONAL ENGINEER REGISTERED 13053 02/14/25 STATE OF IDAHO SHAWN A. MEADOR

PROJECT #: 2496

PAYNE Engineering Inc.
Consulting Engineers
1823 E. Center
Pocatello, Idaho 83201
tel (208) 232-4439
www.payneengineeringinc.com

DATE	REVISION
02/14/2025	ISSUED FOR PERMIT

PHASE 1 PART B FOR:
TWIN FALLS COUNTY - WRIGHT AVE JAIL
2515 Wright Ave, Twin Falls, ID 83301
MEZZANINE SECURITY SYSTEMS PLANS

Laughlin Ricks Architecture
architecture/planning
134 3RD AVE. E. * Twin Falls, Idaho 83301
PHONE: (208) 736-8050

DATE: 02/14/25
SAM Drawn
TEP Checked
#23029 PROJECT #

E1B-3.1

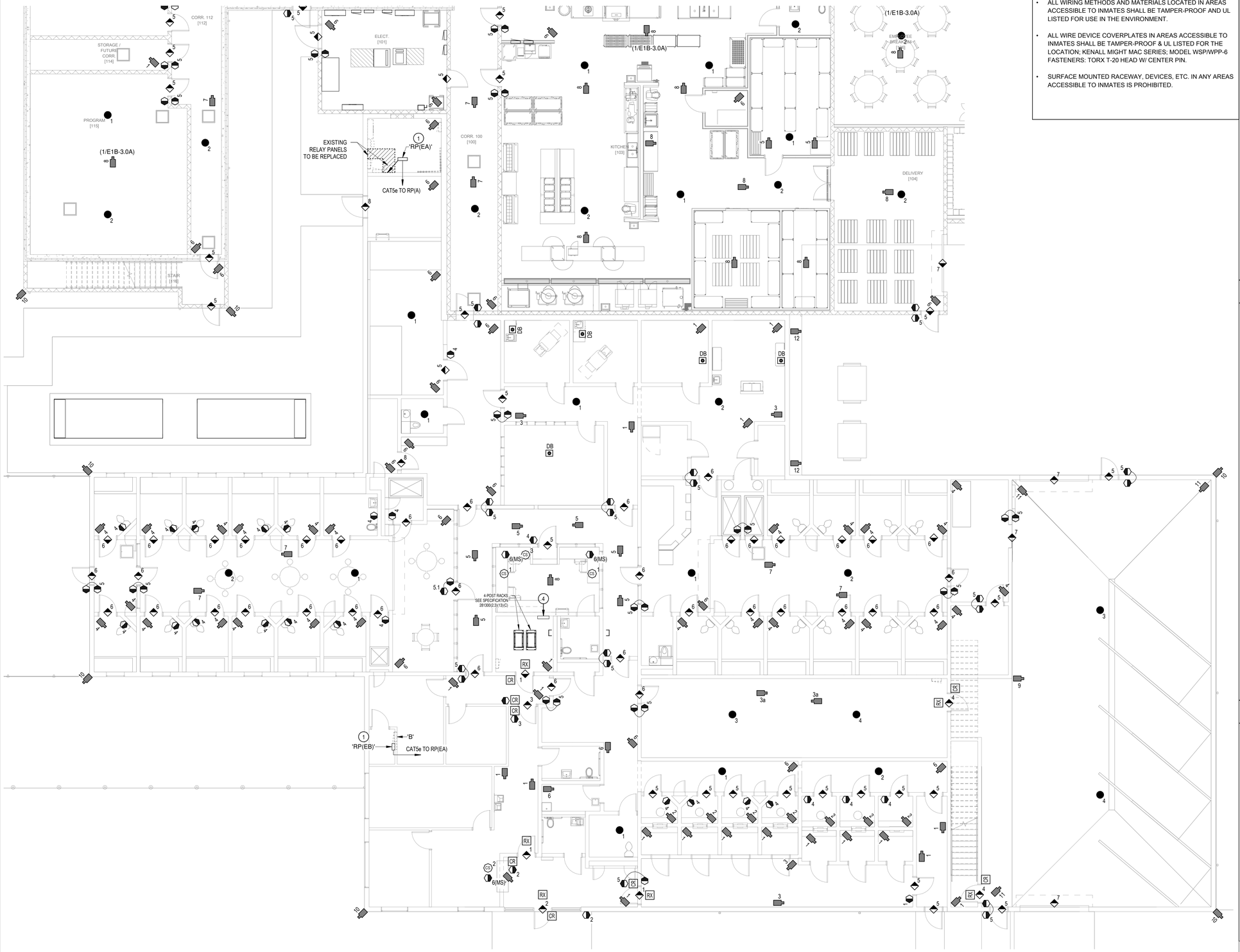

1 MAIN FLOOR SECURITY PLAN - AREA 'E'

SCALE: 1/8" = 1'-0"

0" 8' 16'

NORTH

CORRECTIONAL FACILITY SPECIAL NOTES:

- ALL WIRING METHODS AND MATERIALS LOCATED IN AREAS ACCESSIBLE TO INMATES SHALL BE TAMPER-PROOF AND UL LISTED FOR USE IN THE ENVIRONMENT.
- ALL WIRE DEVICE COVERPLATES IN AREAS ACCESSIBLE TO INMATES SHALL BE TAMPER-PROOF & UL LISTED FOR THE LOCATION; KENALL MIGHT MAC SERIES; MODEL WSP/WPP-6 FASTENERS: TORX T-20 HEAD W/ CENTER PIN.
- SURFACE MOUNTED RACEWAY, DEVICES, ETC. IN ANY AREAS ACCESSIBLE TO INMATES IS PROHIBITED.

JAIL CONTROL & SECURITY SYSTEMS:

- THE JAIL SECURITY SYSTEM INFORMATION MANAGEMENT & CONTROLS SYSTEM SHALL BE:
  PEREGRINE CONTROL INTERFACE PLATFORM
  OR APPROVED EQUAL
  SEE SPECIFICATION SECTION 28 1300 FOR ADDITIONAL INFORMATION. ALTERNATE MANUFACTURER'S SHALL BE SUBMITTED TO 10-DAYS PRIOR TO BID FOR PRE-APPROVAL.
- THE EXISTING JAIL CONTROL/SECURITY SYSTEM LOCATED IN AREA 'E' SHALL BE COMPLETELY REMOVED IN PREPARATION FOR THE NEW SYSTEM, EXISTING CONDUITS, BOXES, ETC MAY BE REUSED IF THEY MEET THE REQUIREMENTS OF THE NEW SYSTEM COMPONENTS.
- NEW SECURITY SYSTEM INCLUDES BUT IS NOT LIMITED TO; TOUCH SCREEN CONTROLS, PLC'S, INTERCOM, DOOR CONTROL, LIGHTING CONTROL, SECURITY CAMERAS, ETC. THE SYSTEM WILL HAVE THE ABILITY FOR FUTURE EXPANSION FOR THE TOTAL BUILD-OUT OF THE PROJECT.
- E.C. SHALL SCHEDULE A COORDINATION MEETING A MINIMUM OF 3-WEEKS PRIOR TO BEGINNING OF ANY ELECTRICAL ROUGH-IN OR MANUFACTURERING OF PRECAST PANEL TO COORDINATE THE ROUGH-IN REQUIREMENTS FOR THE JAIL CONTROL/SECURITY SYSTEM AND COMPONENTS.
  ATTENDEES SHOULD INCLUDE:
  OWNER'S REPRESENTATIVE
  JAIL SECURITY CONTRACTOR
  GENERAL AND ELECTRICAL CONTRACTORS
- REFER TO SHEET E1B-3.4 FOR JAIL SECURITY SYMBOLS, SCHEDULES AND DETAILS.

KEY NOTES:

1 E.C. SHALL REPLACE EXISTING RELAY PANEL(S) WITH NEW RELAY PANEL(S) AS INDICATED FOR CONTROL OF EXISTING/NEW CIRCUITS, REFER TO ASSOCIATED RELAY PANEL SCHEDULE. ALL RELAY PANELS SHALL BE NETWORKED TOGETHER AND PROVIDED WITH REQUIRED MODULE(S) FOR INTEGRATION WITH JAIL SECURITY SYSTEM SOFTWARE, COORDINATE WITH JAIL SECURITY SYSTEM INTEGRATION CONTRACTOR. RE-ROUTE ALL EXISTING CIRCUITS THROUGH NEW RELAY PANEL(S) AS REQUIRED.

4 PROVIDE AND INSTALL JUNCTION BOX WITH TERMINAL BLOCKS FOR EXTENDING OF EXISTING DOOR CONTROL, INTERCOM CABLING AND AIR LINES TO NEW PLC RACKS. INSTALL JUNCTION BOX IN IT RM 11 IF POSSIBLE. COORDINATE WITH JAIL SECURITY CONTRACTOR.

KEY PLAN:

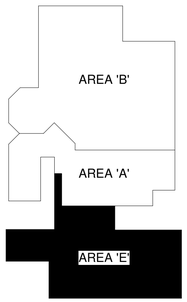

PROFESSIONAL ENGINEER REGISTERED 13053 02/14/25 STATE OF IDAHO SHAWN A. MEADOR

PROJECT #: 2496

PAYNE Engineering Inc.
Consulting Engineers
1823 E. Center
Pocatello, Idaho 83201
tel (208) 232-4439
www.payneengineeringinc.com

DATE	REVISION
02/14/2025	ISSUED FOR PERMIT

PHASE 1 PART B FOR:
TWIN FALLS COUNTY - WRIGHT AVE JAIL
2515 Wright Ave, Twin Falls, ID 83301
MAIN FLOOR SECURITY PLAN - AREA 'E'

Laughlin Ricks Architecture
architecture/planning
134 3RD AVE. E. * Twin Falls, Idaho 83301
PHONE: (208) 736-8050

DATE: 02/14/25

SAM Drawn | TEP Checked

#23029 PROJECT #

E1B-3.2E

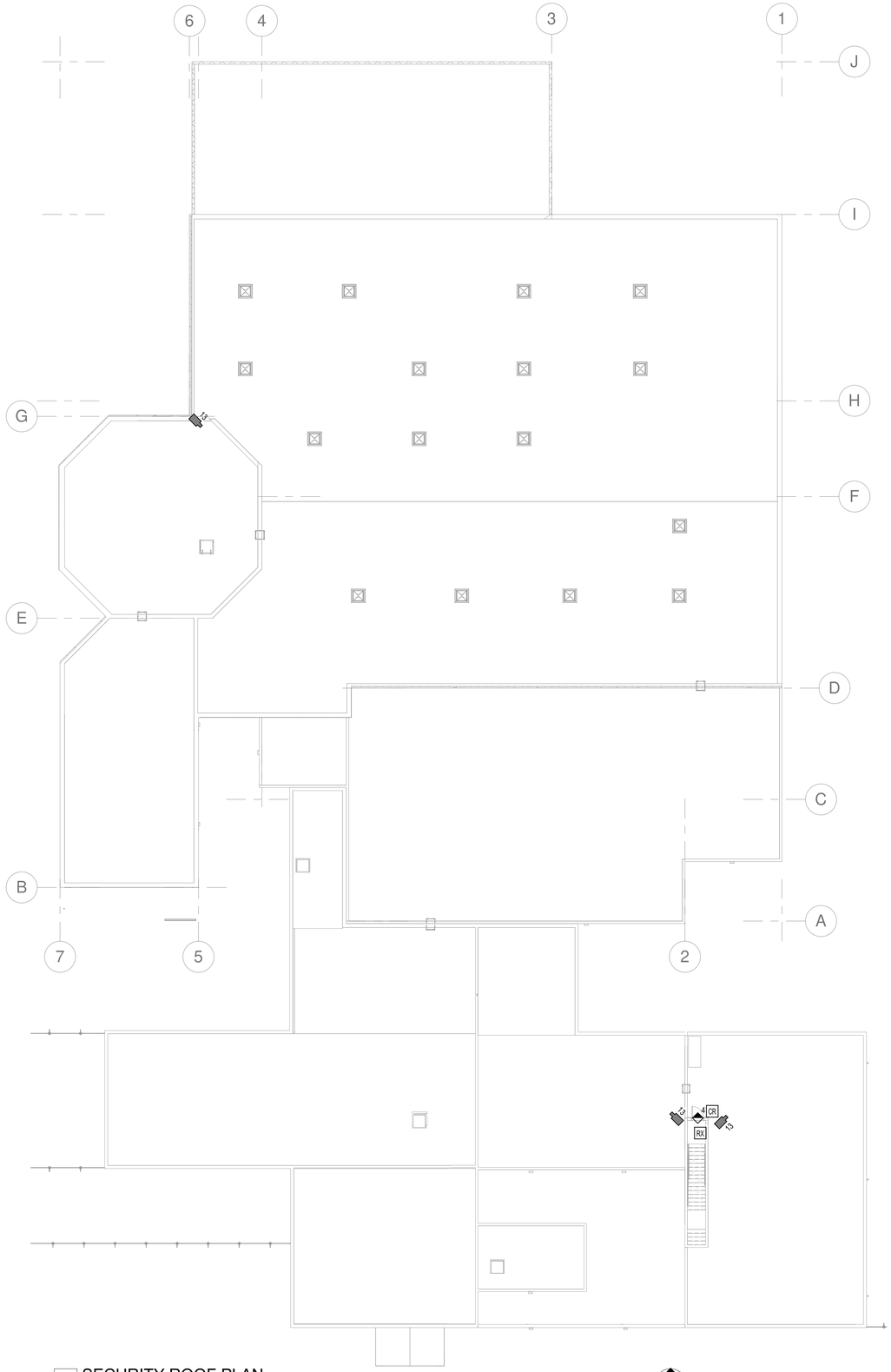

1 SECURITY ROOF PLAN
SCALE: 1/16" = 1'-0"

0" 16' 32'

NORTH

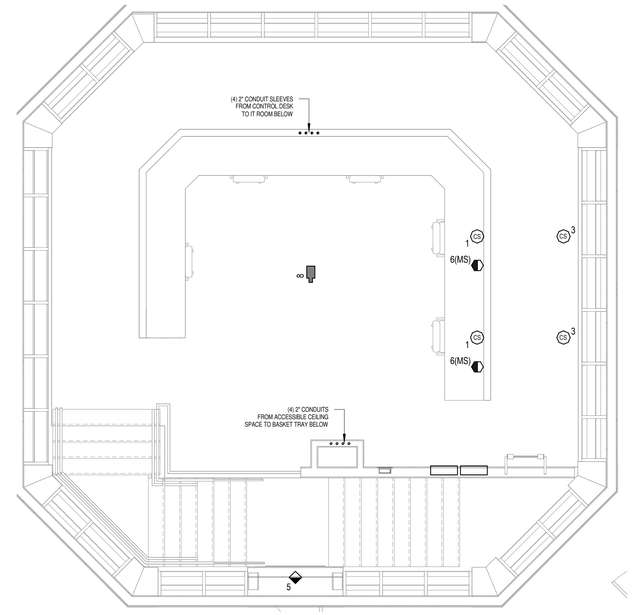

3 CONTROL ROOM UPPER LEVEL SECURITY PLAN'
SCALE: 1/4" = 1'-0"

0" 4' 8'

NORTH

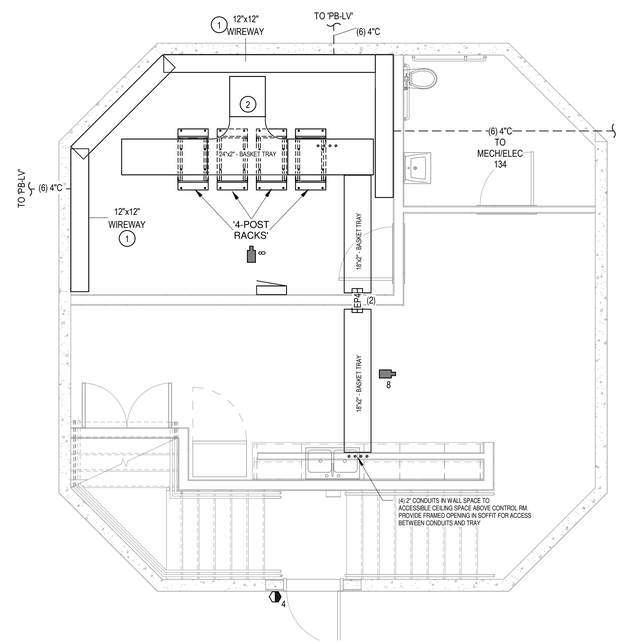

2 CONTROL ROOM LOWER LEVEL SECURITY PLAN
SCALE: 1/4" = 1'-0"

0" 4' 8'

NORTH

JAIL CONTROL & SECURITY SYSTEMS:

- THE JAIL SECURITY SYSTEM INFORMATION MANAGEMENT & CONTROLS SYSTEM SHALL BE:
  PEREGRINE CONTROL INTERFACE PLATFORM
  OR APPROVED EQUAL
  SEE SPECIFICATION SECTION 28 1300 FOR ADDITIONAL INFORMATION. ALTERNATE MANUFACTURER'S SHALL BE SUBMITTED TO 10-DAYS PRIOR TO BID FOR PRE-APPROVAL.
- THE EXISTING JAIL CONTROL/SECURITY SYSTEM LOCATED IN AREA 'E' SHALL BE COMPLETELY REMOVED IN PREPARATION FOR THE NEW SYSTEM, EXISTING CONDUITS, BOXES, ETC MAY BE REUSED IF THEY MEET THE REQUIREMENTS OF THE NEW SYSTEM COMPONENTS.
- NEW SECURITY SYSTEM INCLUDES BUT IS NOT LIMITED TO; TOUCH SCREEN CONTROLS, PLC'S, INTERCOM, DOOR CONTROL, LIGHTING CONTROL, SECURITY CAMERAS, ETC. THE SYSTEM WILL HAVE THE ABILITY FOR FUTURE EXPANSION FOR THE TOTAL BUILD-OUT OF THE PROJECT.
- E.C. SHALL SCHEDULE A COORDINATION MEETING A MINIMUM OF 3-WEEKS PRIOR TO BEGINNING OF ANY ELECTRICAL ROUGH-IN OR MANUFACTURERING OF PRECAST PANEL TO COORDINATE THE ROUGH-IN REQUIREMENTS FOR THE JAIL CONTROL/SECURITY SYSTEM AND COMPONENTS.
  ATTENDEES SHOULD INCLUDE:
  OWNER'S REPRESENTATIVE
  JAIL SECURITY CONTRACTOR
  GENERAL AND ELECTRICAL CONTRACTORS
- REFER TO SHEET E1B-3.4 FOR JAIL SECURITY SYMBOLS, SCHEDULES AND DETAILS.

CORRECTIONAL FACILITY SPECIAL NOTES:

- ALL WIRING METHODS AND MATERIALS LOCATED IN AREAS ACCESSIBLE TO INMATES SHALL BE TAMPER-PROOF AND UL LISTED FOR USE IN THE ENVIRONMENT.
- ALL WIRE DEVICE COVERPLATES IN AREAS ACCESSIBLE TO INMATES SHALL BE TAMPER-PROOF & UL LISTED FOR THE LOCATION; KENALL MIGHT MAC SERIES; MODEL WSP/WPP-6 FASTENERS: TORX T-20 HEAD W/ CENTER PIN.
- SURFACE MOUNTED RACEWAY, DEVICES, ETC. IN ANY AREAS ACCESSIBLE TO INMATES IS PROHIBITED.

KEY NOTES:

1 E.C. SHALL PROVIDE AND INSTALL WIREWAY AROUND IT ROOM AS INDICATED FOR TERMINATION OF LOW VOLTAGE CONDUIT. STUB 4" CONDUIT SLEEVES FROM WIREWAY UP TO CABLE TRAY, COORDINATE QTY WITH SECURITY CONTRACTOR PRIOR TO INSTALLATION.

2 E.C. SHALL PROVIDE AND INSTALL CABLE TRAY ABOVE SECURITY RACKS FOR ROUTING OF ALL LOW VOLTAGE/SECURITY CABLING. PROVIDE WATERFALLS AS NEEDED. COORDINATE WITH SECURITY CONTRACTOR PRIOR TO INSTALLATION.

DATE	REVISION
02/14/2025	ISSUED FOR PERMIT

PHASE 1 PART B FOR:
TWIN FALLS COUNTY - WRIGHT AVE JAIL
2515 Wright Ave, Twin Falls, ID 83301
SECURITY SYSTEM ROOF PLAN & CONTROL ROOM

Laughlin Ricks Architecture
architecture/planning
134 3RD AVE. E. * Twin Falls, Idaho 83301
PHONE: (208) 736-8050

PROFESSIONAL ENGINEER REGISTERED 13053 02/14/25 STATE OF IDAHO SHAWN A. MEADOR

PROJECT #: 2496

PAYNE Engineering Inc. Consulting Engineers
1823 E. Center
Pocatello, Idaho 83201
tel (208) 232-4439
www.payneengineeringinc.com

DATE: 02/14/25
SAM Drawn TEP Checked
#23029 PROJECT #

E1B-3.3

JAIL SECURITY & INTERCOM SYMBOL SCHEDULE

NOTE: ALL SYMBOLS MAY NOT BE USED

SECURITY CONTROL STATIONS	
SYMBOL	DESCRIPTION
CS #	SECURITY CONTROL STATION LOCATION # = REFERS TO "STATION TYPE" NUMBER REFERENCED IN THE ASSOCIATED SCHEDULE, SEE SPECIFICATION SECTION FOR SPECIFIC ROUGH-IN AND CABLING REQUIREMENTS TO BE PROVIDED BY E.C.
DB	SECURITY DURESS BUTTON REFER TO SECURITY CONTROL STATION SCHEDULE, SEE SPECIFICATION SECTION FOR SPECIFIC ROUGH-IN AND CABLING REQUIREMENTS TO BE PROVIDED BY E.C.
ACCESS CONTROL & SECURITY DOORS	
SYMBOL	DESCRIPTION
#	SECURE AND/OR MONITORED DOOR # = REFERS TO "DOOR TYPE" NUMBER REFERENCED IN THE ASSOCIATED SCHEDULE, SEE SPECIFICATION SECTION FOR SPECIFIC ROUGH-IN AND CABLING REQUIREMENTS TO BE PROVIDED BY E.C.
CR	CARD READER LOCATION, REFER TO " DOOR TYPE " FOR ROUGH-IN AND CABLING REQUIREMENTS.
RX	REQUEST TO EXIT LOCATION, REFER TO " DOOR TYPE " FOR ROUGH-IN AND CABLING REQUIREMENTS.
INTERCOM AND SPEAKERS	
SYMBOL	DESCRIPTION
#	INTERCOM LOCATION # = REFERS TO "INTERCOM TYPE" NUMBER REFERENCED IN THE ASSOCIATED SCHEDULE, SEE SPECIFICATION SECTION FOR SPECIFIC ROUGH-IN AND CABLING REQUIREMENTS TO BE PROVIDED BY E.C.
#	SPEAKER LOCATION # = REFERS TO "SPEAKER TYPE" NUMBER REFERENCED IN THE ASSOCIATED SCHEDULE, SEE SPECIFICATION SECTION FOR SPECIFIC ROUGH-IN AND CABLING REQUIREMENTS TO BE PROVIDED BY E.C.
VIDEO SURVELLANCE/CCTV	
SYMBOL	DESCRIPTION
#	CCTV CAMERA LOCATION # = REFERS TO "CAMERA TYPE" NUMBER REFERENCED IN THE ASSOCIATED SCHEDULE, SEE SPECIFICATION SECTION FOR SPECIFIC ROUGH-IN AND CABLING REQUIREMENTS TO BE PROVIDED BY E.C.

GENERAL NOTES:

- E.C. SHALL BE RESPONSIBLE FOR AND INCLUDE IN BID ALL CONDUIT, BACKBOXES ETC FOR SYSTEM ROUGH-IN. FIELD VERIFY SPECIFIC REQUIREMENTS AND LOCATIONS WITH JAIL SECURITY SYSTEM CONTRACTOR PRIOR TO WORK BEING DONE.

JAIL CONTROL & SECURITY SYSTEMS:

- THE JAIL SECURITY SYSTEM INFORMATION MANAGEMENT & CONTROLS SYSTEM SHALL BE:
  PEREGRINE CONTROL INTERFACE PLATFORM
  OR APPROVED EQUAL
  SEE SPECIFICATION SECTION 28 1300 FOR ADDITIONAL INFORMATION. ALTERNATE MANUFACTURER'S SHALL BE SUBMITTED TO 10-DAYS PRIOR TO BID FOR PRE-APPROVAL.
- THE EXISTING JAIL CONTROL/SECURITY SYSTEM LOCATED IN AREA 'E' SHALL BE COMPLETELY REMOVED IN PREPARATION FOR THE NEW SYSTEM, EXISTING CONDUITS, BOXES, ETC MAY BE REUSED IF THEY MEET THE REQUIREMENTS OF THE NEW SYSTEM COMPONENTS.
- NEW SECURITY SYSTEM INCLUDES BUT IS NOT LIMITED TO; TOUCH SCREEN CONTROLS, PLC'S, INTERCOM, DOOR CONTROL, LIGHTING CONTROL, SECURITY CAMERAS, ETC. THE SYSTEM WILL HAVE THE ABILITY FOR FUTURE EXPANSION FOR THE TOTAL BUILD-OUT OF THE PROJECT.
- E.C. SHALL SCHEDULE A COORDINATION MEETING A MINIMUM OF 3-WEEKS PRIOR TO BEGINNING OF ANY ELECTRICAL ROUGH-IN OR MANUFACTURERING OF PRECAST PANEL TO COORDINATE THE ROUGH-IN REQUIREMENTS FOR THE JAIL CONTROL/SECURITY SYSTEM AND COMPONENTS.
  ATTENDEES SHOULD INCLUDE:
  OWNER'S REPRESENTATIVE
  JAIL SECURITY CONTRACTOR
  GENERAL AND ELECTRICAL CONTRACTORS
- REFER TO SHEET E1B-3.4 FOR JAIL SECURITY SYMBOLS, SCHEDULES AND DETAILS.

CORRECTIONAL FACILITY SPECIAL NOTES:

- ALL WIRING METHODS AND MATERIALS LOCATED IN AREAS ACCESSIBLE TO INMATES SHALL BE TAMPER-PROOF AND UL LISTED FOR USE IN THE ENVIRONMENT.
- ALL WIRE DEVICE COVERPLATES IN AREAS ACCESSIBLE TO INMATES SHALL BE TAMPER-PROOF & UL LISTED FOR THE LOCATION; KENALL MIGHT MAC SERIES; MODEL WSP/WPP-6 FASTENERS: TORX T-20 HEAD W/ CENTER PIN.
- SURFACE MOUNTED RACEWAY, DEVICES, ETC. IN ANY AREAS ACCESSIBLE TO INMATES IS PROHIBITED.

SECURITY CONTROL STATION SCHEDULE

STATION TYPE	DESCRIPTION	SPECIFICATION SECTION
1	SECURITY CONTROL STATION	281300(2.3)(9(a)
2	SECURITY CONTROL STATION	281300(2.3)(9(b)
3	SECURITY CONTROL VIEW STATION	281300(2.3)(9(c)
DB	SECURITY DURESS BUTTON	281300(1.3)(d)

VIDEO SURVEILLANCE SCHEDULE

CAMERA TYPE	DESCRIPTION	SPECIFICATION SECTION
1	DOME CAMERA, NO AUDIO	281300(2.3)(12)(a)
2	DETENTION CORNER CAMERA, NO AUDIO	281300(2.3)(12)(b)
3	DOME CAMERA, NO AUDIO	281300(2.3)(12)(c)
3a	DOME CAMERA, NO AUDIO	281300(2.3)(12)(d)
3b	DOME CAMERA, NO AUDIO	281300(2.3)(12)(e)
4	DETENTION CORNER MOUNT CAMERA W/ AUDIO	281300(2.3)(12)(f)
5	DOME CAMERA W/ AUDIO	281300(2.3)(12)(g)
6	DOME CAMERA, W/ AUDIO	281300(2.3)(12)(h)
7	DOME CAMERA, W/ AUDIO	281300(2.3)(12)(i)
8	360 DEG. CAMERA, W/ AUDIO	281300(2.3)(12)(j)
9	PANORAMIC MULTI-SENSOR CAMERA	281300(2.3)(12)(k)
10	CORNER MOUNT PANORAMIC CAMERA	281300(2.3)(12)(l)
10a	PANORAMIC CAMERA	281300(2.3)(12)(m)
11	FIXED CAMERA, W/ AUDIO	281300(2.3)(12)(n)
12	BULLET CAMERA W/ AUDIO	281300(2.3)(12)(o)
13	PANORAMIC MULTI-SENSOR CAMERA ROOFTOP	281300(2.3)(12)(p)
14	PANORAMIC MULTI-SENSOR CAMERA	281300(2.3)(12)(q)

ACCESS CONTROL/DOOR SCHEDULE

DOOR TYPE	DESCRIPTION	SPECIFICATION SECTION
1	KEY CARD ACCESS CONTROL DOOR	281300(2.3)(11(a)
2	KEY CARD ACCESS CONTROL (EXISTING) DOOR	281300(2.3)(11(b)
3	DUAL READER KEY CARD ACCESS CONTROL DOOR	281300(2.3)(11(c)
4	KEY CARD & PIN ACCESS CONTROL DOOR	281300(2.3)(11(d)
5	SECURE DOOR DETENTION CONTROL VIA PNEUMATIC AIR LOCKS	281300(2.3)(11(e)
6	SECURE DOOR DETENTION CONTROL VIA PNEUMATIC AIR LOCKS	281300(2.3)(11(f)
7	SECURE DOOR CONTROL	281300(2.3)(11(g)
8	MONITORED DOOR	281300(2.3)(11(h)

INTERCOM & SPEAKER SCHEDULE

TYPE NUMBER	DESCRIPTION	SPECIFICATION SECTION
INTERCOM		
1	INTERIOR HARDING DETENTION GRADE INTERCOM	281300(2.3)(10)(a)
2	EXISTING HARDING DETENTION GRADE INTERCOM	281300(2.3)(10)(b)
3	DUAL SIDED INTERCOM, (2) HARDING DETENTION GRADE INTERCOM ONE ON EACH SIDE OF DOOR	281300(2.3)(10)(c)
4	HARDING DETENTION GRADE INTERCOM	281300(2.3)(10)(d)
5	DUAL SIDED INTERCOM, (2) HARDING DETENTION GRADE INTERCOM ONE ON EACH SIDE OF DOOR	281300(2.3)(10)(e)
5.1	MULLION MOUNT CALL BUTTON W/ OVERHEAD SPEAKER	281300(2.3)(10)(f)
6(MS)	INTERCOM MASTER STATION	281300(2.3)(10)(g)
SPEAKER		
1	OVERHEAD SPEAKER	281300(2.3)(10)(h)
2	OVERHEAD SPEAKER (SECOND SPEAKER)	281300(2.3)(10)(i)
3	OVERHEAD PENDANT SPEAKER	281300(2.3)(10)(j)
4	OVERHEAD PENDANT SPEAKER (SECOND SPEAKER)	281300(2.3)(10)(k)

RELAY PANEL: RP(A)

PAYNE Engineering Inc. Consulting Engineers

Location:
Supply From: LA
Mounting: Surface
Enclosure: NEMA 1

Manufacturer: Intelligent Lighting Controls
Model #: LightLEEDer 'LL' Series W/ Modbus TCP Protocol
Description: PROGRAMMABLE & NETWORKABLE LIGHTING RELAY PANEL WITH INTEGRATION WITH JAIL SECURITY SYSTEM INTEGRATION...

PROJECT:
TWIN FALLS COUNTY - WRIGHT AVE JAIL

Notes:
NETWORK ALL RP(##) PANELS TOGETHER AND CONNECT TO JAIL SECURITY SYSTEM FOR CONTROL.

RELAY #	POLES	CIRCUIT	CIRCUIT DESCRIPTION	CONTROL	COMMENTS
1	1	HA-1	LTG - CORRIDOR 100	JSS	
2	1	HA-1	LTG - CORRIDOR 110	JSS	
3	1	HA-1	LTG - CORRIDOR 112	JSS	
4	1	HA-5	LTG - STAIR 211	JSS	
5	1	HA-5	LTG - CORRIDOR 212	JSS	
6	1	HA-5	LTG - CORRIDOR 108	JSS	
7	1	HA-2	LTG - EXTERIOR WEST	TC/PC	
8	1	HA-3	LTG - KITCHEN	JSS	
9	1	HA-3	LTG - DELIVERY	JSS	
10	1	HA-8	LTG - SITE POLES	TC/PC	
11	1	ELA-1	DAYROOM 117 SMOKE EF	FA/JSS	FAN TO BE CONTROLLED BY FA W/ JSS OVERRIDE
12	1	ELA-3	DORM 135 SMOKE EF	FA/JSS	FAN TO BE CONTROLLED BY FA W/ JSS OVERRIDE
13	1	ELA-5	DORM 135 SMOKE EF	FA/JSS	FAN TO BE CONTROLLED BY FA W/ JSS OVERRIDE
14	1	ELA-7	INDOOR REC 136 SMOKE EF	FA/JSS	FAN TO BE CONTROLLED BY FA W/ JSS OVERRIDE
15	1		SPARE		
16	1		SPARE		
17	1		SPARE		
18	1		SPARE		
19	1		SPARE		
20	1		SPARE		
21			SPACE		
22			SPACE		
23			SPACE		
24			SPACE		

CONTROL LEGEND:
TC = TIMECLOCK — PC = PHOTOCELL CONTROL — JSS = JAIL SECURITY SYSTEM
LVS = LOW VOLTAGE SWITCH PER... — D = 0-10V DIMMING CONTROL FROM PANEL

GENERAL LIGHTING CONTROL NOTES:
A. PROGRAMMING AND COMMISSIONING OF THE LIGHTING CONTROL PANEL AND ASSOCIATED DEVICES (SWITCHES, OCC. SENSORS, PHOTOCELLS, ETC.) SHALL BE DONE BY FACTORY CERTIFIED PERSONNEL. E.C. IS RESPONSIBLE FOR COORDINATION OF THE COMMISSIONING/PROGRAMMING AND SHALL INCLUDE ALL REQUIRED COSTS IN THE BASE BID.
B. ALL RELAY'S PROGRAMMED FOR TIMECLOCK CONTROLS, ON/OFF TIMES SHALL BE COORDINATED WITH THE OWNER.
C. E.C. SHALL COORINDATE PROGRAMMING AND INTEGRATION WITH JAIL SECURITY SYSTEM INTEGRATOR/CONTRACTOR.

RELAY PANEL: RP(EA)

PAYNE Engineering Inc. Consulting Engineers

Location:
Supply From: C
Mounting: Surface
Enclosure: NEMA 1

Manufacturer: Intelligent Lighting Controls
Model #: LightLEEDer 'LL' Series W/ Modbus TCP Protocol
Description: PROGRAMMABLE & NETWORKABLE LIGHTING RELAY PANEL WITH INTEGRATION WITH JAIL SECURITY SYSTEM INTEGRATION...

PROJECT:
TWIN FALLS COUNTY - WRIGHT AVE JAIL

Notes:
NETWORK ALL RP(##) PANELS TOGETHER AND CONNECT TO JAIL SECURITY SYSTEM FOR CONTROL.

RELAY #	POLES	CIRCUIT	CIRCUIT DESCRIPTION	CONTROL	COMMENTS
1	1	EXISTING	NORTH CELLS	JSS	(FROM LRP-B)
2	1	EXISTING	CORRIDOR & DAYROOM	JSS	(FROM LRP-B)
3	1	EXISTING	SOUTH CELLS	JSS	(FROM LRP-B)
4	1	EXISTING	SHOWER #1 FAN/LIGHT	JSS	(FROM LRP-B)
5	1	EXISTING	SHOWER #2 FAN/LIGHT	JSS	(FROM LRP-B)
6	1	N/A	SPARE		
7	1	EXISTING	A-1 TO A-6 LIGHTS	JSS	(FROM LRP-A)
8	1	EXISTING	A WING CORRIDOR LIGHTS	JSS	(FROM LRP-A)
9	1	EXISTING	SHOWER #1 LIGHTS	JSS	(FROM LRP-A)
10	1	EXISTING	A-7 TO A-12 LIGHTS	JSS	(FROM LRP-A)
11	1	EXISTING	A WING DAYROOM LIGHTS	JSS	(FROM LRP-A)
12	1	EXISTING	SHOWER #2 LIGHTS	JSS	(FROM LRP-A)
13	1	EXISTING	DAYROOM NIGHT/EM LIGHTS	JSS	(FROM LRP-EM)
14	1	EXISTING	SHOWER #1 NIGHT/EM LIGHTS	JSS	(FROM LRP-EM)
15	1	EXISTING	A-7 TO A-12 NIGHT/EM LIGHTS	JSS	(FROM LRP-EM)
16	1	EXISTING	SHOWER #2 NIGHT/EM LIGHTS	JSS	(FROM LRP-EM)
17	1	EXISTING	A WING CORRIDOR NIGHT/EM LIGHTS	JSS	(FROM LRP-EM)
18	1	EXISTING	A-1 TO A-6 NIGHT/EM LIGHTS	JSS	(FROM LRP-EM)
19	1	EXISTING	EM LIGHTS NEW AREA	JSS	(FROM LRP-EM)
20	1		SPARE		
21	1		SPARE		
22	1		SPARE		
23	1		SPARE		
24	1		SPARE		

CONTROL LEGEND:
TC = TIMECLOCK — PC = PHOTOCELL CONTROL — JSS = JAIL SECURITY SYSTEM
LVS = LOW VOLTAGE SWITCH PER... — D = 0-10V DIMMING CONTROL FROM PANEL

GENERAL LIGHTING CONTROL NOTES:
A. PROGRAMMING AND COMMISSIONING OF THE LIGHTING CONTROL PANEL AND ASSOCIATED DEVICES (SWITCHES, OCC. SENSORS, PHOTOCELLS, ETC.) SHALL BE DONE BY FACTORY CERTIFIED PERSONNEL. E.C. IS RESPONSIBLE FOR COORDINATION OF THE COMMISSIONING/PROGRAMMING AND SHALL INCLUDE ALL REQUIRED COSTS IN THE BASE BID.
B. ALL RELAY'S PROGRAMMED FOR TIMECLOCK CONTROLS, ON/OFF TIMES SHALL BE COORDINATED WITH THE OWNER.
C. E.C. SHALL COORINDATE PROGRAMMING AND INTEGRATION WITH JAIL SECURITY SYSTEM INTEGRATOR/CONTRACTOR.

RELAY PANEL: RP(B)

PAYNE Engineering Inc. Consulting Engineers

Location:
Supply From: LB
Mounting: Surface
Enclosure: NEMA 1

Manufacturer: Intelligent Lighting Controls
Model #: LightLEEDer 'LL' Series W/ Modbus TCP Protocol
Description: PROGRAMMABLE & NETWORKABLE LIGHTING RELAY PANEL WITH INTEGRATION WITH JAIL SECURITY SYSTEM INTEGRATION...

PROJECT:
TWIN FALLS COUNTY - WRIGHT AVE JAIL

Notes:
NETWORK ALL RP(##) PANELS TOGETHER AND CONNECT TO JAIL SECURITY SYSTEM FOR CONTROL.

RELAY #	POLES	CIRCUIT	CIRCUIT DESCRIPTION	CONTROL	COMMENTS
1	1	HB-1	LTG - DAYROOM 117 SHOWERS	JSS	
2	1	HB-1	LTG - DAYROOM 135 SHOWERS	JSS	
3	1	HB-2	LTG - DORM 135 GENERAL	JSS	
4	1	HB-2	LTG - DORM 135 NITE-LITES	JSS	
5	1	EHB-1	LTG - DAYROOM 117 WALKWAY	JSS	
6	1	EHB-1	LTG - DAYROOM 117 WALKWAY NL	JSS	
7	1	EHB-3	LTG - DAYROOM 117 CELLS GENERAL	JSS	
8	1	EHB-3	LTG - DAYROOM 117 CELLS NITE-LITES	JSS	
9	1	EHB-5	LTG - DAYROOM 117 NITE-LITES	JSS	PROVIDE 0-10V DIMMING MODULE FOR THIS ZONE
10	1	HB-5	LTG - DAYROOM 117 GENERAL	JSS	
11	1	EHB-2	LTG - DAYROOM 135 NITE-LITES	JSS	PROVIDE 0-10V DIMMING MODULE FOR THIS ZONE
12	1	EHB-2	LTG - INDOOR REC 136 NITE-LITES	JSS	
13	1	HB-4	LTG - DAYROOM 135 GENERAL	JSS	
14	1	HB-4	LTG - INDOOR REC 136 GENERAL	JSS	
15	1	HB-6	LTG - OUTDOOR REC AREA	JSS	
16	1	HB-3	LTG - EXTERIOR NORTH & EAST	TC/PC	
17	1	LB-9	TV - DAYROOM 117	JSS	
18	1	LB-9	TV - DORM 186	JSS	
19	1	LB-9	TV - REC 136	JSS	
20	1		SPARE		
21	1		SPARE		
22	1		SPARE		
23	1		SPARE		
24	1		SPARE		
25	1		SPARE		
26	1		SPARE		
27	1		SPARE		
28	1		SPARE		
29	1		SPARE		
30	1		SPARE		
31	1		SPARE		
32	1		SPARE		

CONTROL LEGEND:
TC = TIMECLOCK — PC = PHOTOCELL CONTROL — JSS = JAIL SECURITY SYSTEM
LVS = LOW VOLTAGE SWITCH PER... — D = 0-10V DIMMING CONTROL FROM PANEL

GENERAL LIGHTING CONTROL NOTES:
A. PROGRAMMING AND COMMISSIONING OF THE LIGHTING CONTROL PANEL AND ASSOCIATED DEVICES (SWITCHES, OCC. SENSORS, PHOTOCELLS, ETC.) SHALL BE DONE BY FACTORY CERTIFIED PERSONNEL. E.C. IS RESPONSIBLE FOR COORDINATION OF THE COMMISSIONING/PROGRAMMING AND SHALL INCLUDE ALL REQUIRED COSTS IN THE BASE BID.
B. ALL RELAY'S PROGRAMMED FOR TIMECLOCK CONTROLS, ON/OFF TIMES SHALL BE COORDINATED WITH THE OWNER.
C. E.C. SHALL COORINDATE PROGRAMMING AND INTEGRATION WITH JAIL SECURITY SYSTEM INTEGRATOR/CONTRACTOR.

RELAY PANEL: RP(EB)

PAYNE Engineering Inc. Consulting Engineers

Location:
Supply From:
Mounting: SURFACE
Enclosure: NEMA 1

Manufacturer: Intelligent Lighting Controls
Model #: LightLEEDer 'LL' Series W/ Modbus TCP Protocol
Description: PROGRAMMABLE & NETWORKABLE LIGHTING RELAY PANEL WITH INTEGRATION WITH JAIL SECURITY SYSTEM INTEGRATION...

PROJECT:
TWIN FALLS COUNTY - WRIGHT AVE JAIL

Notes:
NETWORK ALL RP(##) PANELS TOGETHER AND CONNECT TO JAIL SECURITY SYSTEM FOR CONTROL.

RELAY #	POLES	CIRCUIT	CIRCUIT DESCRIPTION	CONTROL	COMMENTS
1	1	EXISTING	EXISTING (UNKNOWN)	VERIFY	(FROM LRP-C)
2	1		SPARE		
3	1		SPARE		
4	1		SPARE		

CONTROL LEGEND:
TC = TIMECLOCK — PC = PHOTOCELL CONTROL — JSS = JAIL SECURITY SYSTEM
LVS = LOW VOLTAGE SWITCH PER... — D = 0-10V DIMMING CONTROL FROM PANEL

GENERAL LIGHTING CONTROL NOTES:
A. PROGRAMMING AND COMMISSIONING OF THE LIGHTING CONTROL PANEL AND ASSOCIATED DEVICES (SWITCHES, OCC. SENSORS, PHOTOCELLS, ETC.) SHALL BE DONE BY FACTORY CERTIFIED PERSONNEL. E.C. IS RESPONSIBLE FOR COORDINATION OF THE COMMISSIONING/PROGRAMMING AND SHALL INCLUDE ALL REQUIRED COSTS IN THE BASE BID.
B. ALL RELAY'S PROGRAMMED FOR TIMECLOCK CONTROLS, ON/OFF TIMES SHALL BE COORDINATED WITH THE OWNER.
C. E.C. SHALL COORINDATE PROGRAMMING AND INTEGRATION WITH JAIL SECURITY SYSTEM INTEGRATOR/CONTRACTOR.

PROFESSIONAL ENGINEER REGISTERED 13053 02/14/25 STATE OF IDAHO SHAWN A. MEADOR

PROJECT #: 2496

PAYNE Engineering Inc. Consulting Engineers
1823 E. Center
Pocatello, Idaho 83201
tel (208) 232-4439
www.payneengineeringinc.com

DATE	REVISION
02/14/2025	ISSUED FOR PERMIT

PHASE 1 PART B FOR:
TWIN FALLS COUNTY - WRIGHT AVE JAIL
2515 Wright Ave, Twin Falls, ID 83301
SECURITY SYSTEMS SYMBOLS & SCHEDULES

Laughlin Ricks Architecture
architecture/planning
134 3RD AVE. E. * Twin Falls, Idaho 83301
PHONE: (208) 736-8050

DATE: 02/14/25
SAM Drawn — TEP Checked
#23029 PROJECT #

E1B-3.4

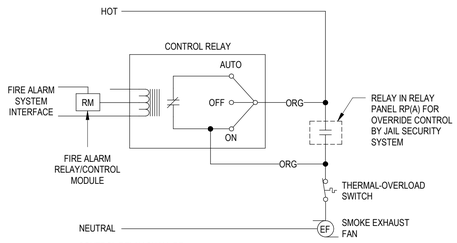

CONTROL RELAY SHALL BE FUNCTIONAL DEVICES INC. #RIB2401SB-NC OR EQUAL. RELAY SHALL FAIL CLOSED.

A SMOKE EXHAUST FAN CONTROL DETAIL

SCALE: NONE

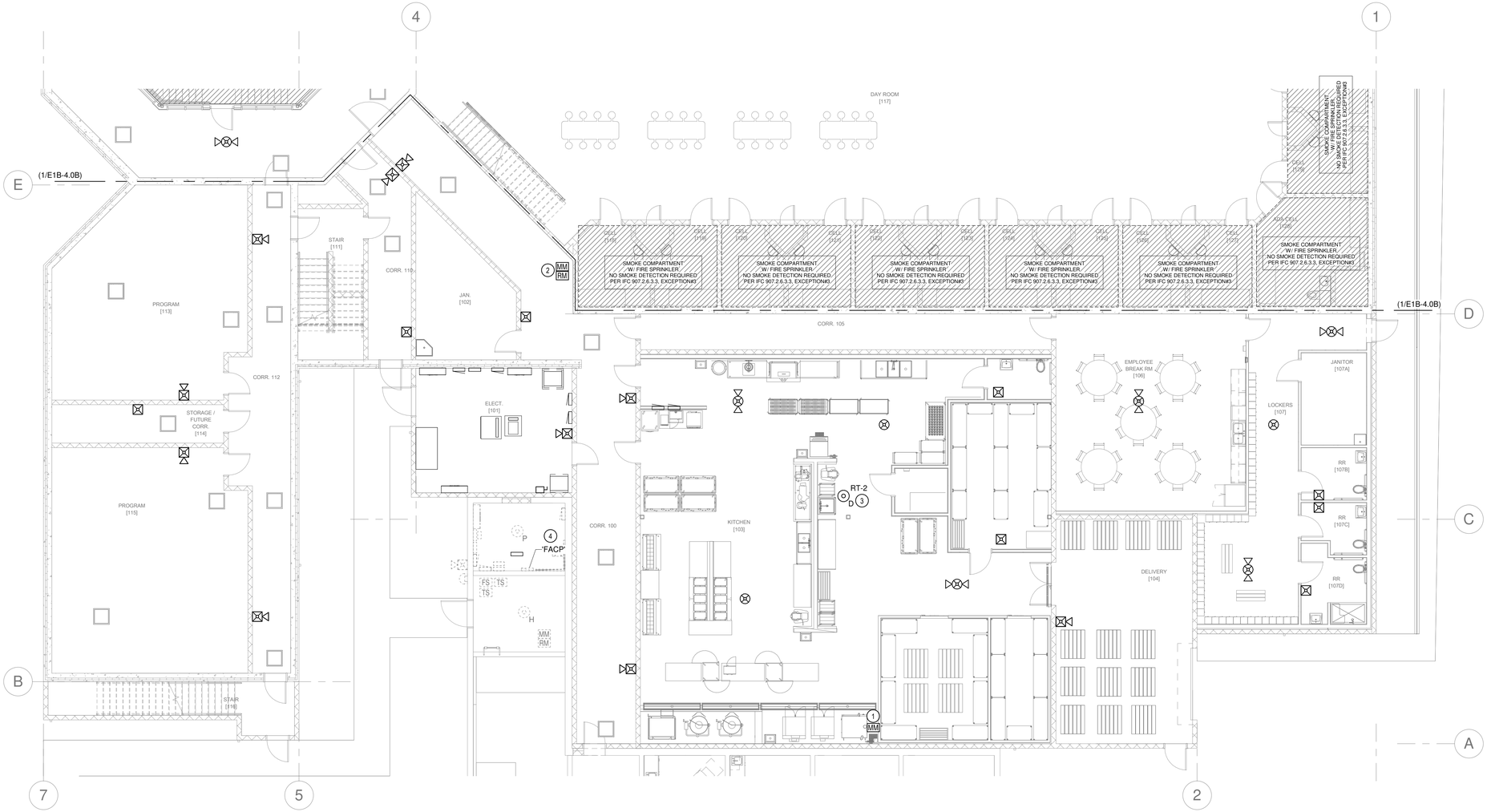

1 MAIN FLOOR FIRE ALARM PLAN - AREA 'A'

SCALE: 1/8" = 1'-0"

0" 8' 16'

NORTH

FIRE ALARM EXPANSION NOTES:

A. PROVIDE ALL EQUIPMENT, MATERIALS AND LABOR NECESSARY TO EXPAND THE EXISTING POTTER 1000 FIRE ALARM SYSTEM. THE SYSTEM ADDITION SHALL BE CONNECTED DIRECTLY TO THE EXISTING MAIN FIRE ALARM PANEL.
THE INSTALLATION SHALL BE AS RECOMMENDED BY THE MANUFACTURER AND ACCEPTED BY THE LOCAL AHJ. WHEN THE SYSTEM IS COMPLETE, A FACTORY REPRESENTATIVE SHALL TEST THE SYSTEM, MAKE ADJUSTMENTS AND PLACE THE SYSTEM IN OPERATING ORDER.

B. WITHIN 30 DAYS AFTER THE CONTRACT AWARD AND PRIOR TO THE PURCHASE OF ANY EQUIPMENT, THE FIRE ALARM SYSTEM CONTRACTOR SHALL SUBMIT FOR APPROVAL SIX (6) COPIES OF THE FOLLOWING:
   a. A LIST OF MATERIALS THAT ARE TO BE USED ON THE PROJECT, INCLUDING MANUFACTURER, MODEL NUMBER AND TECHNICAL INFORMATION.
   b. PRELIMINARY CIRCUIT DIAGRAMS SHOWING INTERCONNECTION OF ALL MONITORING, NOTIFICATION AND ANNUNCIATION DEVICES, PANELS AND WIRING COUNTS. DIAGRAMS ARE TO BE 11"X17", DONE IN A GOOD WORKMAN LIKE MANNER.
   c. TECHNICAL MANUALS FOR ALL OF THE EQUIPMENT THAT IS TO BE USED ON THE PROJECT.
   d. SUBMIT SHOP DRAWINGS AND REQUIRED CALCULATIONS TO THE LOCAL AHJ.
   e. OBTAIN A WRITTEN LETTER OF ACCEPTANCE OF THE PROPOSED SYSTEM AND INCLUDE WITH THE SHOP DRAWING SUBMITTAL TO THE ENGINEER.

C. CONTRACTOR SHALL PROVIDE AND INSTALL ALL REQUIRED POWER SUPPLIES, ELECTRONICS AND CONNECTIONS TO MODIFY EXISTING SYSTEM TO ACCEPT NEW ADDITION. THE COMPLETE SYSTEM SHALL MAINTAIN A UL LISTING.

D. ELECTRICAL CONTRACTOR SHALL INCLUDE A $2,000.00 CASH ALLOWANCE IN THE BID FOR MISCELLANEOUS ADDITIONS AND/OR REQUIREMENTS IMPOSED BY THE LOCAL AHJ.

GENERAL NOTES:

A. REFER TO SYMBOL SCHEDULE SHEET FOR PROJECT GENERAL NOTES AND GENERAL NOTES ASSOCIATED WITH THE INSTALLATION OF EACH SYSTEM, INCLUDINB BUT NOT LIMITED TO; LIGHTING, POWER, FIRE ALARM, SPECIAL SYSTEMS, ETC.

PRECAST CONCRETE ELECTRICAL ROUGH-IN:

- THIS BUILDING WILL BE CONSTRUCTED UTILIZING PRECAST CONCRETE PANELS. THE ELEC. CONTRACTOR IS REPSONSIBLE FOR COORDINATING WITH THE PRECASTER AND G.C. ALL LOCATIONS FOR RECESSED BOXES, CONDUIT SLEEVES, ETC. REQUIRED FOR INSTALLATION OF THE ELECTRICAL SYSTEMS INDICATED IN THE CONTRACT DOCUMENTS.
- THE ELECT. CONTRACTOR SHALL INCLUDE IN BASE BID ALL ELECTRICAL MATERIALS AND THE COSTS REQUIRED FOR TRAVEL TO THE PRECASTER'S SHOP (MAX 500 MILES FROM PROJECT LOCATION) FOR THE INSTALLATION OF THE ELECT. BOXES, CONDUITS, & ETC. PRIOR TO POURING OF THE PRECAST PANELS.
- SURFACE MOUNTED DEVICES, CONDUIT, ETC. IS PROHIBITED IN ALL AREAS ACCESSIBLE TO INMATES. ANY AND ALL SURFACE MOUNTED INSTALLATIONS SHALL BE PRE-APPROVED BY THE OWNER/ARCHITECT PRIOR TO INSTALLATION.

CORRECTIONAL FACILITY SPECIAL NOTES:

- ALL WIRING METHODS AND MATERIALS LOCATED IN AREAS ACCESSIBLE TO INMATES SHALL BE TAMPER-PROOF AND UL LISTED FOR USE IN THE ENVIRONMENT.
- ALL WIRE DEVICE COVERPLATES IN AREAS ACCESSIBLE TO INMATES SHALL BE TAMPER-PROOF & UL LISTED FOR THE LOCATION; KENALL MIGHT MAC SERIES; MODEL WSP/WPP-6 FASTENERS: TORX T-20 HEAD W/ CENTER PIN.
- SURFACE MOUNTED RACEWAY, DEVICES, ETC. IN ANY AREAS ACCESSIBLE TO INMATES IS PROHIBITED.

KEY NOTES:

1 PROVIDE RELAY/MONITOR MODULES AS REQUIRED FOR FIRE ALARM SYSTEM INTERCONNECTION TO KITCHEN HOOD PER NFPA 72.

2 PROVIDE RELAY/MONITOR MODULES AS REQUIRED FOR FIRE ALARM SYSTEM MONITORING OF FIRE SPRINKLER CONTROL VALVE FOR SHUT-OFF OF FIRE SPRINKLER SERVICE TO CELLS, CONTROL VALVE TO BE CONTROLLED BY JAIL SECURITY INTEGRATION SYSTEM. FIRE ALARM SYSTEM SHALL PROVIDE AN ALARM CONDITION WHENEVER VALVE IS CLOSED. COORDINATE EXACT LOCATION WITH FIRE SPRINKLER CONTRACTOR.

3 DUCT-SMOKE DETECTOR PROVIDED WITH HVAC UNIT, E.C. SHALL CONNECT DETECTOR TO BUILDING FIRE ALARM SYSTEM. DETECTOR SHALL SHUT-DOWN ASSOCIATED HVAC UNIT UPON ACTIVATION. ELECT. CONTRACTOR SHALL ALSO PROVIDE AND INSTALL REMOTE TEST SWITCH, INSTALL FLUSH IN CEILING NEAR LOCATION OF DUCT-SMOKE DETECTOR AS REQUIRED BY LOCAL AHJ.

4 EXISTING POTTER AFC-1000 FIRE ALARM PANEL INSTALLED IN PHASE 1A SHALL BE EXPANDED AS REQUIRED PHASE 1B ADDITION, REFER TO FIRE ALARM EXPANSION NOTES THIS SHEET. PROVIDE ADDITIONAL NOTIFICATION PANELS, DEVICES, MODULES, ETC. FOR A COMPLETE BUILDING FIRE ALARM SYSTEM FOR PHASE 1A & 1B.

KEY PLAN:

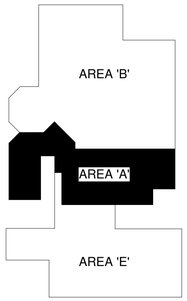

PROFESSIONAL ENGINEER REGISTERED 13053 02/14/25 STATE OF IDAHO SHAWN A. MEADOR

PROJECT #: 2496

PAYNE Engineering Inc. Consulting Engineers
1823 E. Center
Pocatello, Idaho 83201
tel (208) 232-4439
www.payneengineeringinc.com

DATE	REVISION
02/14/2025	ISSUED FOR PERMIT

PHASE 1 PART B FOR:
TWIN FALLS COUNTY - WRIGHT AVE JAIL
2516 Wright Ave, Twin Falls, ID 83301
MAIN FLOOR FIRE ALARM PLAN - AREA 'A'

Laughlin Ricks Architecture
architecture/planning
134 3RD AVE. E. * Twin Falls, Idaho 83301
PHONE: (208) 736-8050

DATE: 02/14/25
SAM Drawn
TEP Checked
#23029 PROJECT #

E1B-4.0A

FIRE ALARM EXPANSION NOTES:

A. PROVIDE ALL EQUIPMENT, MATERIALS AND LABOR NECESSARY TO EXPAND THE EXISTING POTTER 1000 FIRE ALARM SYSTEM. THE SYSTEM ADDITION SHALL BE CONNECTED DIRECTLY TO THE EXISTING MAIN FIRE ALARM PANEL.
THE INSTALLATION SHALL BE AS RECOMMENDED BY THE MANUFACTURER AND ACCEPTED BY THE LOCAL AHJ. WHEN THE SYSTEM IS COMPLETE, A FACTORY REPRESENTATIVE SHALL TEST THE SYSTEM, MAKE ADJUSTMENTS AND PLACE THE SYSTEM IN OPERATING ORDER.

B. WITHIN 30 DAYS AFTER THE CONTRACT AWARD AND PRIOR TO THE PURCHASE OF ANY EQUIPMENT, THE FIRE ALARM SYSTEM CONTRACTOR SHALL SUBMIT FOR APPROVAL SIX (6) COPIES OF THE FOLLOWING:
   a. A LIST OF MATERIALS THAT ARE TO BE USED ON THE PROJECT, INCLUDING MANUFACTURER, MODEL NUMBER AND TECHNICAL INFORMATION.
   b. PRELIMINARY CIRCUIT DIAGRAMS SHOWING INTERCONNECTION OF ALL MONITORING, NOTIFICATION AND ANNUNCIATION DEVICES, PANELS AND WIRING COUNTS. DIAGRAMS ARE TO BE 11"X17", DONE IN A GOOD WORKMAN LIKE MANNER.
   c. TECHNICAL MANUALS FOR ALL OF THE EQUIPMENT THAT IS TO BE USED ON THE PROJECT.
   d. SUBMIT SHOP DRAWINGS AND REQUIRED CALCULATIONS TO THE LOCAL AHJ.
   e. OBTAIN A WRITTEN LETTER OF ACCEPTANCE OF THE PROPOSED SYSTEM AND INCLUDE WITH THE SHOP DRAWING SUBMITTAL TO THE ENGINEER.

C. CONTRACTOR SHALL PROVIDE AND INSTALL ALL REQUIRED POWER SUPPLIES, ELECTRONICS AND CONNECTIONS TO MODIFY EXISTING SYSTEM TO ACCEPT NEW ADDITION. THE COMPLETE SYSTEM SHALL MAINTAIN A UL LISTING.

D. ELECTRICAL CONTRACTOR SHALL INCLUDE A $2,000.00 CASH ALLOWANCE IN THE BID FOR MISCELLANEOUS ADDITIONS AND/OR REQUIREMENTS IMPOSED BY THE LOCAL AHJ.

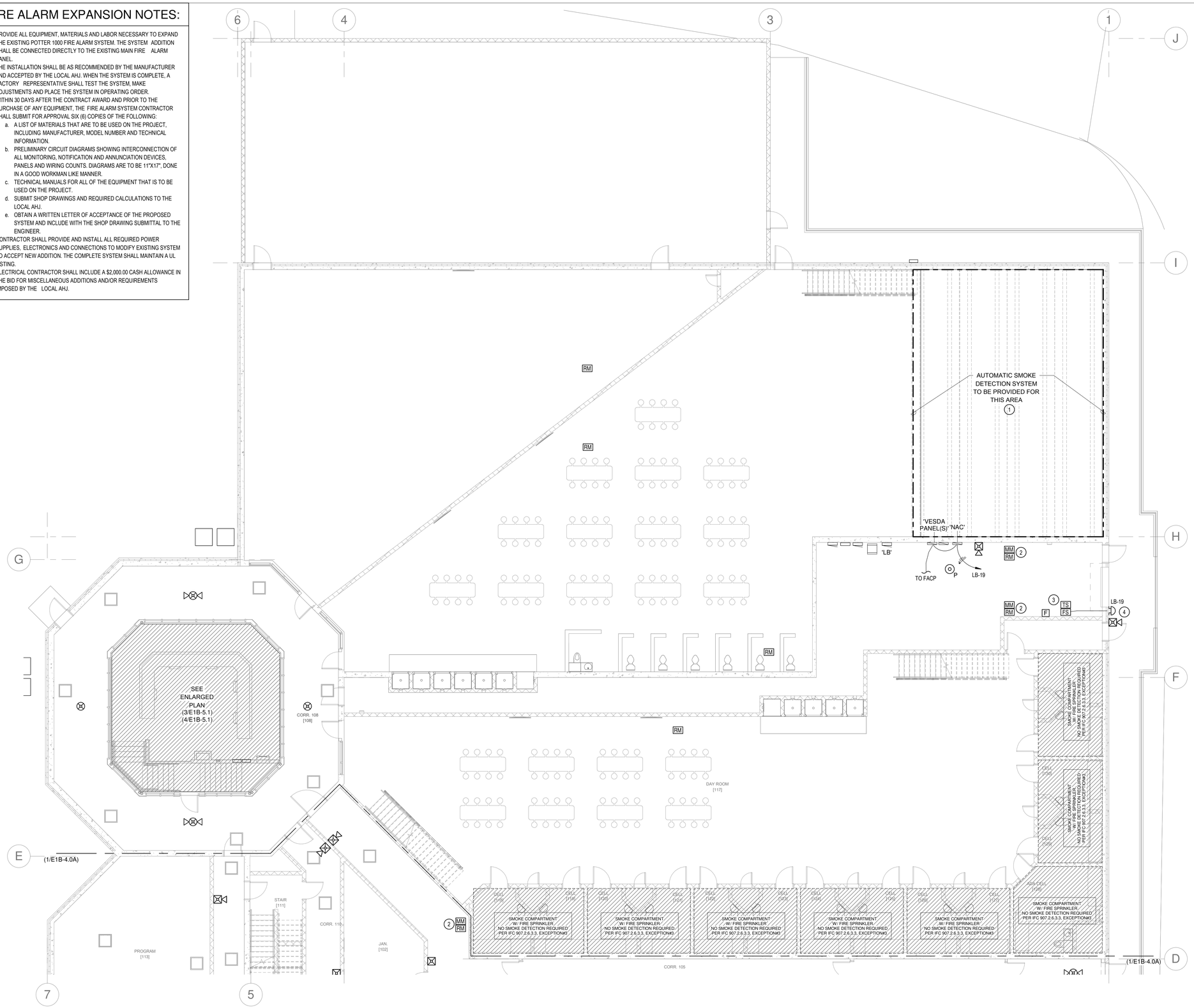

1 MAIN FLOOR FIRE ALARM PLAN - AREA 'B'
SCALE: 1/8" = 1'-0"

0" 8' 16'

NORTH

GENERAL NOTES:

A. REFER TO SYMBOL SCHEDULE SHEET FOR PROJECT GENERAL NOTES AND GENERAL NOTES ASSOCIATED WITH THE INSTALLATION OF EACH SYSTEM, INCLUDINB BUT NOT LIMITED TO; LIGHTING, POWER, FIRE ALARM, SPECIAL SYSTEMS, ETC.

PRECAST CONCRETE ELECTRICAL ROUGH-IN:

- THIS BUILDING WILL BE CONSTRUCTED UTILIZING PRECAST CONCRETE PANELS. THE ELEC. CONTRACTOR IS REPSONSIBLE FOR COORDINATING WITH THE PRECASTER AND G.C. ALL LOCATIONS FOR RECESSED BOXES, CONDUIT SLEEVES, ETC. REQUIRED FOR INSTALLATION OF THE ELECTRICAL SYSTEMS INDICATED IN THE CONTRACT DOCUMENTS.
- THE ELECT. CONTRACTOR SHALL INCLUDE IN BASE BID ALL ELECTRICAL MATERIALS AND THE COSTS REQUIRED FOR TRAVEL TO THE PRECASTER'S SHOP (MAX 500 MILES FROM PROJECT LOCATION) FOR THE INSTALLATION OF THE ELECT. BOXES, CONDUITS, & ETC. PRIOR TO POURING OF THE PRECAST PANELS.
- SURFACE MOUNTED DEVICES, CONDUIT, ETC. IS PROHIBITED IN ALL AREAS ACCESSIBLE TO INMATES. ANY AND ALL SURFACE MOUNTED INSTALLATIONS SHALL BE PRE-APPROVED BY THE OWNER/ARCHITECT PRIOR TO INSTALLATION.

CORRECTIONAL FACILITY SPECIAL NOTES:

- ALL WIRING METHODS AND MATERIALS LOCATED IN AREAS ACCESSIBLE TO INMATES SHALL BE TAMPER-PROOF AND UL LISTED FOR USE IN THE ENVIRONMENT.
- ALL WIRE DEVICE COVERPLATES IN AREAS ACCESSIBLE TO INMATES SHALL BE TAMPER-PROOF & UL LISTED FOR THE LOCATION; KENALL MIGHT MAC SERIES; MODEL WSP/WPP-6 FASTENERS: TORX T-20 HEAD W/ CENTER PIN.
- SURFACE MOUNTED RACEWAY, DEVICES, ETC. IN ANY AREAS ACCESSIBLE TO INMATES IS PROHIBITED.

KEY NOTES:

1 FIRE ALARM CONTRACTOR SHALL PROVIDE AND INSTALL AN AUTOMATIC SMOKE DETECTION SYSTEM AS REQUIRED BY SECTION 907.2.6.3.3 OF THE IFC FOR A GROUP I-3 OCCUPANCY. THE AUTOMATIC SMOKE DETECTION SYSTEM SHALL UTILIZE AN INTELLIGENT VESDA AIR SAMPLING SYSTEM, SEE SPECIFICATIONS. CONTRACTOR IS RESPONSIBLE FOR A COMPLETE AN OPERABLE SYSTEM, INCLUDING ALL REQUIRED CORE-DRILLING AND ETC NEEDED TO INSTALL SYSTEM. ALL PIPING SHALL BE INSTALLED ABOVE CEILINGS, EXPOSED PIPING IS PROHIBITED. VESDA SYSTEM HEAD-END EQUIPMENT SHALL BE MONITORED/CONTROLLED BY BUILDING FIRE ALARM SYSTEM. ALL SAMPLING PORTS SHALL BE STAINLESS STEEL, TAMPERPROOF.

2 PROVIDE RELAY/MONITOR MODULES AS REQUIRED FOR FIRE ALARM SYSTEM MONITORING OF FIRE SPRINKLER CONTROL VALVE FOR SHUT-OFF OF FIRE SPRINKLER SERVICE TO CELLS, CONTROL VALVE TO BE CONTROLLED BY JAIL SECURITY INTEGRATION SYSTEM. FIRE ALARM SYSTEM SHALL PROVIDE AN ALARM CONDITION WHENEVER VALVE IS CLOSED. COORDINATE EXACT LOCATION WITH FIRE SPRINKLER CONTRACTOR.

3 PROVIDE MONITORING OF FLOW, TAMPER AND PRESSURE SWITCHES AT FIRE RISER LOCATION, COORDINATE QTY OF POINTS WITH FIRE SPRINKLER CONTRACTOR.

4 INSTALL FIRE BELL AND HORN/STROBE ABOVE FIRE DEPT. CONNECTION; FIELD LOCATION, COORDINATE LOCATION WITH FIRE SPRINKLER CONTRACTOR PRIOR TO ROUGH-IN.

KEY PLAN:

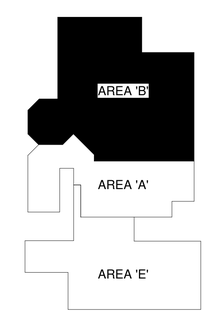

PROFESSIONAL ENGINEER REGISTERED 13053 02/14/25 STATE OF IDAHO SHAWN A. MEADOR

PROJECT #: 2496

PAYNE Engineering Inc. Consulting Engineers
1823 E. Center
Pocatello, Idaho 83201
tel (208) 232-4439
www.payneengineeringinc.com

DATE	REVISION
02/14/2025	ISSUED FOR PERMIT

PHASE 1 PART B FOR:
TWIN FALLS COUNTY - WRIGHT AVE JAIL
2515 Wright Ave, Twin Falls, ID 83301
MAIN FLOOR FIRE ALARM PLAN - AREA 'B'

Laughlin Ricks Architecture
architecture/planning
134 3RD AVE. E. * Twin Falls, Idaho 83301
PHONE: (208) 736-8050

DATE: 02/14/25
SAM Drawn
TEP Checked
#23029 PROJECT #

E1B-4.0B

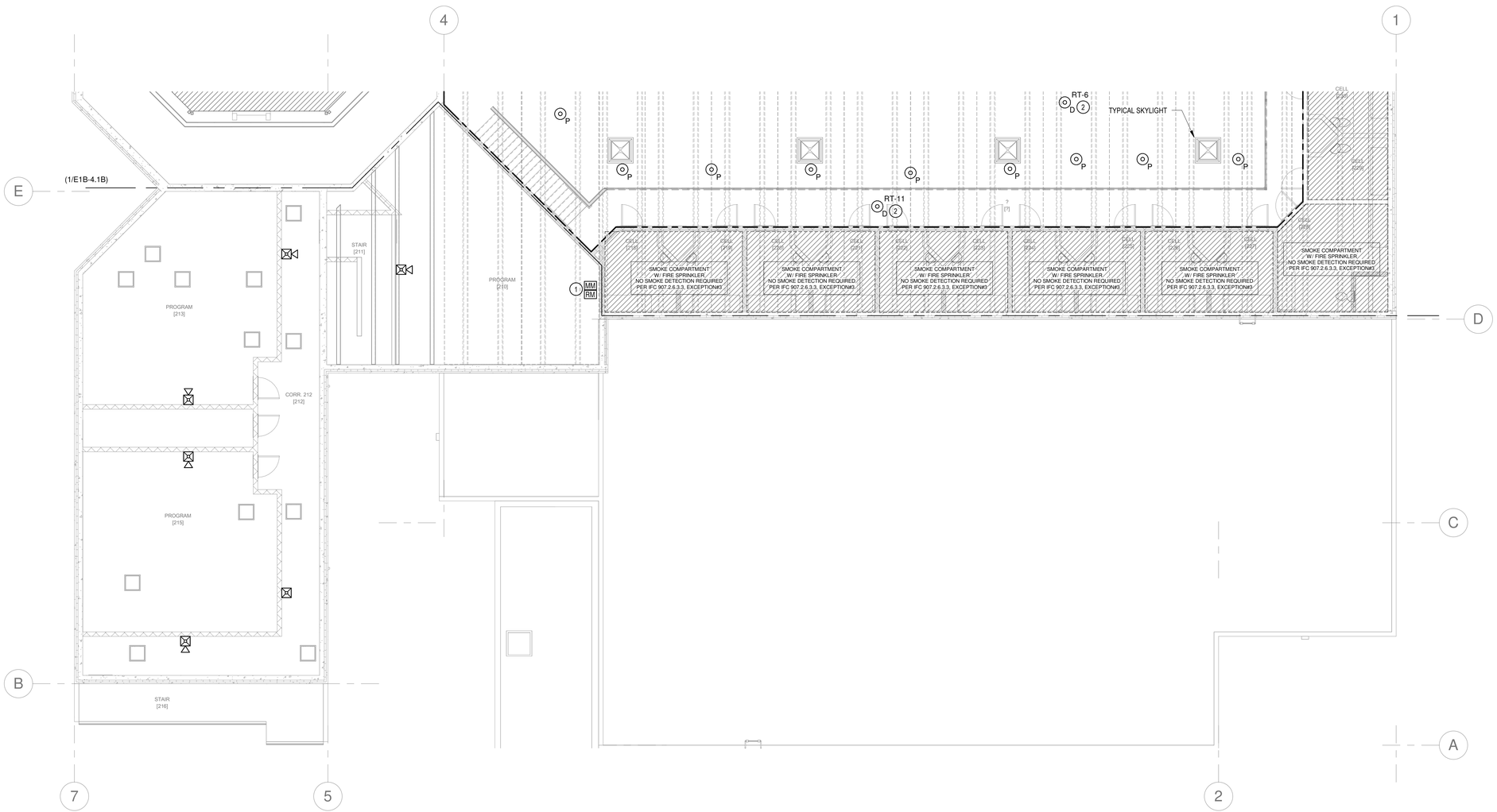

1 MEZZANINE FIRE ALARM PLAN - AREA 'A'

SCALE: 1/8" = 1'-0"

0' 8' 16'

NORTH

FIRE ALARM EXPANSION NOTES:

A. PROVIDE ALL EQUIPMENT, MATERIALS AND LABOR NECESSARY TO EXPAND THE EXISTING POTTER 1000 FIRE ALARM SYSTEM. THE SYSTEM ADDITION SHALL BE CONNECTED DIRECTLY TO THE EXISTING MAIN FIRE ALARM PANEL.
THE INSTALLATION SHALL BE AS RECOMMENDED BY THE MANUFACTURER AND ACCEPTED BY THE LOCAL AHJ. WHEN THE SYSTEM IS COMPLETE, A FACTORY REPRESENTATIVE SHALL TEST THE SYSTEM, MAKE ADJUSTMENTS AND PLACE THE SYSTEM IN OPERATING ORDER.

B. WITHIN 30 DAYS AFTER THE CONTRACT AWARD AND PRIOR TO THE PURCHASE OF ANY EQUIPMENT, THE FIRE ALARM SYSTEM CONTRACTOR SHALL SUBMIT FOR APPROVAL SIX (6) COPIES OF THE FOLLOWING:
   a. A LIST OF MATERIALS THAT ARE TO BE USED ON THE PROJECT, INCLUDING MANUFACTURER, MODEL NUMBER AND TECHNICAL INFORMATION.
   b. PRELIMINARY CIRCUIT DIAGRAMS SHOWING INTERCONNECTION OF ALL MONITORING, NOTIFICATION AND ANNUNCIATION DEVICES, PANELS AND WIRING COUNTS. DIAGRAMS ARE TO BE 11"X17", DONE IN A GOOD WORKMAN LIKE MANNER.
   c. TECHNICAL MANUALS FOR ALL OF THE EQUIPMENT THAT IS TO BE USED ON THE PROJECT.
   d. SUBMIT SHOP DRAWINGS AND REQUIRED CALCULATIONS TO THE LOCAL AHJ.
   e. OBTAIN A WRITTEN LETTER OF ACCEPTANCE OF THE PROPOSED SYSTEM AND INCLUDE WITH THE SHOP DRAWING SUBMITTAL TO THE ENGINEER.

C. CONTRACTOR SHALL PROVIDE AND INSTALL ALL REQUIRED POWER SUPPLIES, ELECTRONICS AND CONNECTIONS TO MODIFY EXISTING SYSTEM TO ACCEPT NEW ADDITION. THE COMPLETE SYSTEM SHALL MAINTAIN A UL LISTING.

D. ELECTRICAL CONTRACTOR SHALL INCLUDE A $2,000.00 CASH ALLOWANCE IN THE BID FOR MISCELLANEOUS ADDITIONS AND/OR REQUIREMENTS IMPOSED BY THE LOCAL AHJ.

GENERAL NOTES:

A. REFER TO SYMBOL SCHEDULE SHEET FOR PROJECT GENERAL NOTES AND GENERAL NOTES ASSOCIATED WITH THE INSTALLATION OF EACH SYSTEM, INCLUDINB BUT NOT LIMITED TO; LIGHTING, POWER, FIRE ALARM, SPECIAL SYSTEMS, ETC.

PRECAST CONCRETE ELECTRICAL ROUGH-IN:

- THIS BUILDING WILL BE CONSTRUCTED UTILIZING PRECAST CONCRETE PANELS. THE ELEC. CONTRACTOR IS REPSONSIBLE FOR COORDINATING WITH THE PRECASTER AND G.C. ALL LOCATIONS FOR RECESSED BOXES, CONDUIT SLEEVES, ETC. REQUIRED FOR INSTALLATION OF THE ELECTRICAL SYSTEMS INDICATED IN THE CONTRACT DOCUMENTS.
- THE ELECT. CONTRACTOR SHALL INCLUDE IN BASE BID ALL ELECTRICAL MATERIALS AND THE COSTS REQUIRED FOR TRAVEL TO THE PRECASTER'S SHOP (MAX 500 MILES FROM PROJECT LOCATION) FOR THE INSTALLATION OF THE ELECT. BOXES, CONDUITS, & ETC. PRIOR TO POURING OF THE PRECAST PANELS.
- SURFACE MOUNTED DEVICES, CONDUIT, ETC. IS PROHIBITED IN ALL AREAS ACCESSIBLE TO INMATES. ANY AND ALL SURFACE MOUNTED INSTALLATIONS SHALL BE PRE-APPROVED BY THE OWNER/ARCHITECT PRIOR TO INSTALLATION.

CORRECTIONAL FACILITY SPECIAL NOTES:

- ALL WIRING METHODS AND MATERIALS LOCATED IN AREAS ACCESSIBLE TO INMATES SHALL BE TAMPER-PROOF AND UL LISTED FOR USE IN THE ENVIRONMENT.
- ALL WIRE DEVICE COVERPLATES IN AREAS ACCESSIBLE TO INMATES SHALL BE TAMPER-PROOF & UL LISTED FOR THE LOCATION; KENALL MIGHT MAC SERIES; MODEL WSP/WPP-6 FASTENERS: TORX T-20 HEAD W/ CENTER PIN.
- SURFACE MOUNTED RACEWAY, DEVICES, ETC. IN ANY AREAS ACCESSIBLE TO INMATES IS PROHIBITED.

KEY NOTES:

1 PROVIDE RELAY/MONITOR MODULES AS REQUIRED FOR FIRE ALARM SYSTEM MONITORING OF FIRE SPRINKLER CONTROL VALVE FOR SHUT-OFF OF FIRE SPRINKLER SERVICE TO CELLS, CONTROL VALVE TO BE CONTROLLED BY JAIL SECURITY INTEGRATION SYSTEM. FIRE ALARM SYSTEM SHALL PROVIDE AN ALARM CONDITION WHENEVER VALVE IS CLOSED. COORDINATE EXACT LOCATION WITH FIRE SPRINKLER CONTRACTOR.

2 DUCT-SMOKE DETECTOR PROVIDED WITH HVAC UNIT, E.C. SHALL CONNECT DETECTOR TO BUILDING FIRE ALARM SYSTEM. DETECTOR SHALL SHUT-DOWN ASSOCIATED HVAC UNIT UPON ACTIVATION. ELECT. CONTRACTOR SHALL ALSO PROVIDE AND INSTALL REMOTE TEST SWITCH, INSTALL FLUSH IN CEILING NEAR LOCATION OF DUCT-SMOKE DETECTOR AS REQUIRED BY LOCAL AHJ.

KEY PLAN:

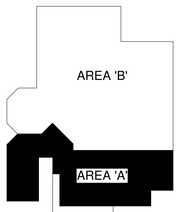

PROFESSIONAL ENGINEER REGISTERED 13053 02/14/25 STATE OF IDAHO SHAWN A. MEADOR

PROJECT #: 2496

PAYNE Engineering Inc. Consulting Engineers
1823 E. Center
Pocatello, Idaho 83201
tel (208) 232-4439
www.payneengineeringinc.com

DATE	REVISION
02/14/2025	ISSUED FOR PERMIT

PHASE 1 PART B FOR:
TWIN FALLS COUNTY - WRIGHT AVE JAIL
2515 Wright Ave, Twin Falls, ID 83301
MEZZANINE FIRE ALARM PLAN - AREA 'A'

Laughlin Ricks Architecture
architecture/planning
134 3RD AVE. E. * Twin Falls, Idaho 83301
PHONE: (208) 736-8050

DATE: 02/14/25
SAM Drawn
TEP Checked
#23029 PROJECT #

E1B-4.1A

GENERAL NOTES:

A. REFER TO SYMBOL SCHEDULE SHEET FOR PROJECT GENERAL NOTES AND GENERAL NOTES ASSOCIATED WITH THE INSTALLATION OF EACH SYSTEM, INCLUDINB BUT NOT LIMITED TO; LIGHTING, POWER, FIRE ALARM, SPECIAL SYSTEMS, ETC.

FIRE ALARM EXPANSION NOTES:

A. PROVIDE ALL EQUIPMENT, MATERIALS AND LABOR NECESSARY TO EXPAND THE EXISTING POTTER 1000 FIRE ALARM SYSTEM. THE SYSTEM ADDITION SHALL BE CONNECTED DIRECTLY TO THE EXISTING MAIN FIRE ALARM PANEL.
THE INSTALLATION SHALL BE AS RECOMMENDED BY THE MANUFACTURER AND ACCEPTED BY THE LOCAL AHJ. WHEN THE SYSTEM IS COMPLETE, A FACTORY REPRESENTATIVE SHALL TEST THE SYSTEM, MAKE ADJUSTMENTS AND PLACE THE SYSTEM IN OPERATING ORDER.

B. WITHIN 30 DAYS AFTER THE CONTRACT AWARD AND PRIOR TO THE PURCHASE OF ANY EQUIPMENT, THE FIRE ALARM SYSTEM CONTRACTOR SHALL SUBMIT FOR APPROVAL SIX (6) COPIES OF THE FOLLOWING:
   a. A LIST OF MATERIALS THAT ARE TO BE USED ON THE PROJECT, INCLUDING MANUFACTURER, MODEL NUMBER AND TECHNICAL INFORMATION.
   b. PRELIMINARY CIRCUIT DIAGRAMS SHOWING INTERCONNECTION OF ALL MONITORING, NOTIFICATION AND ANNUNCIATION DEVICES, PANELS AND WIRING COUNTS. DIAGRAMS ARE TO BE 11"X17", DONE IN A GOOD WORKMAN LIKE MANNER.
   c. TECHNICAL MANUALS FOR ALL OF THE EQUIPMENT THAT IS TO BE USED ON THE PROJECT.
   d. SUBMIT SHOP DRAWINGS AND REQUIRED CALCULATIONS TO THE LOCAL AHJ.
   e. OBTAIN A WRITTEN LETTER OF ACCEPTANCE OF THE PROPOSED SYSTEM AND INCLUDE WITH THE SHOP DRAWING SUBMITTAL TO THE ENGINEER.

C. CONTRACTOR SHALL PROVIDE AND INSTALL ALL REQUIRED POWER SUPPLIES, ELECTRONICS AND CONNECTIONS TO MODIFY EXISTING SYSTEM TO ACCEPT NEW ADDITION. THE COMPLETE SYSTEM SHALL MAINTAIN A UL LISTING.

D. ELECTRICAL CONTRACTOR SHALL INCLUDE A $2,000.00 CASH ALLOWANCE IN THE BID FOR MISCELLANEOUS ADDITIONS AND/OR REQUIREMENTS IMPOSED BY THE LOCAL AHJ.

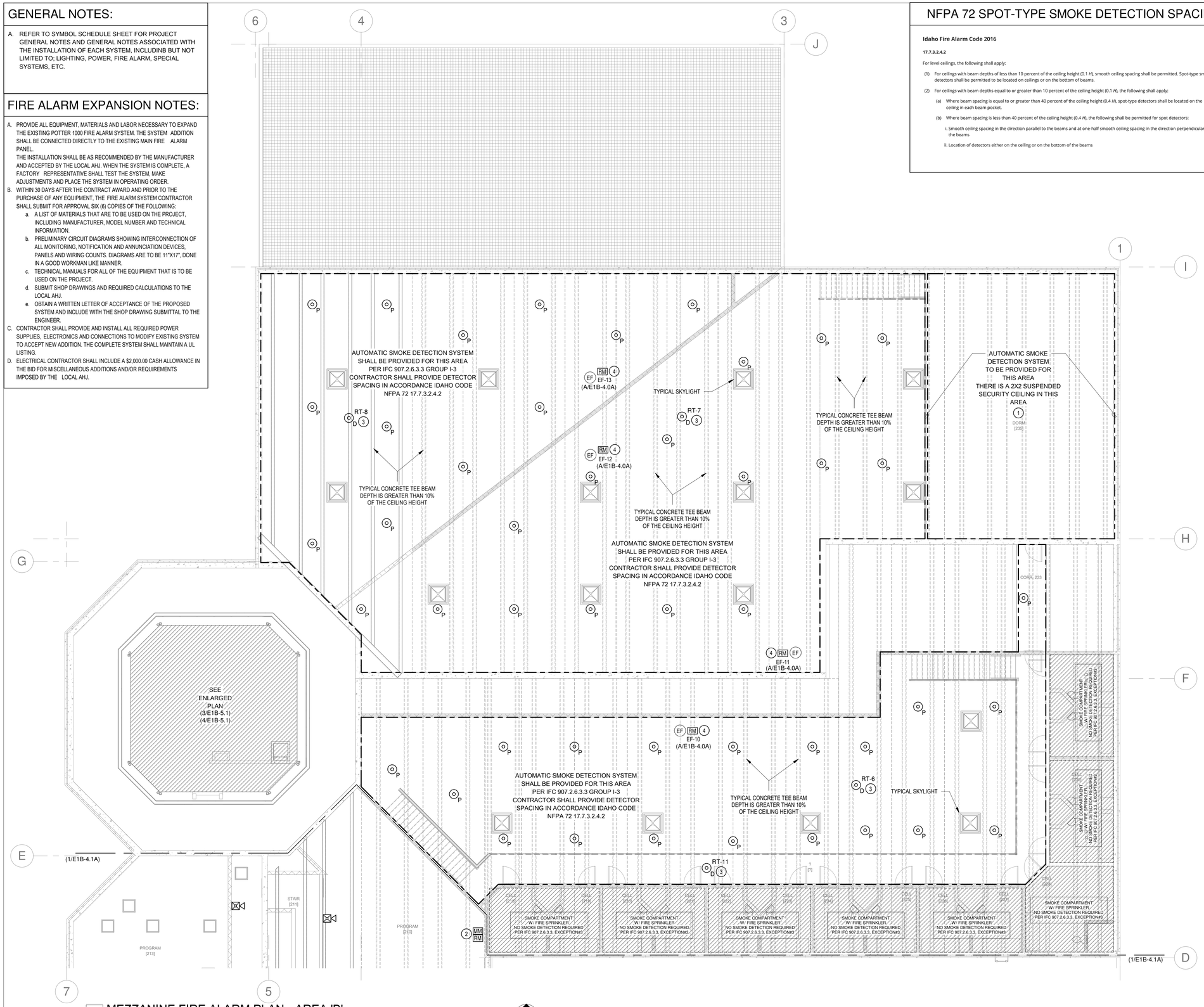

1 MEZZANINE FIRE ALARM PLAN - AREA 'B'
SCALE: 1/8" = 1'-0"

0" 8' 16'

NORTH

NFPA 72 SPOT-TYPE SMOKE DETECTION SPACING

Idaho Fire Alarm Code 2016

17.7.3.2.4.2

For level ceilings, the following shall apply:

(1) For ceilings with beam depths of less than 10 percent of the ceiling height (0.1 *H*), smooth ceiling spacing shall be permitted. Spot-type smoke detectors shall be permitted to be located on ceilings or on the bottom of beams.

(2) For ceilings with beam depths equal to or greater than 10 percent of the ceiling height (0.1 *H*), the following shall apply:

(a) Where beam spacing is equal to or greater than 40 percent of the ceiling height (0.4 *H*), spot-type detectors shall be located on the ceiling in each beam pocket.

(b) Where beam spacing is less than 40 percent of the ceiling height (0.4 *H*), the following shall be permitted for spot detectors:

i. Smooth ceiling spacing in the direction parallel to the beams and at one-half smooth ceiling spacing in the direction perpendicular to the beams

ii. Location of detectors either on the ceiling or on the bottom of the beams

PRECAST CONCRETE ELECTRICAL ROUGH-IN:

- THIS BUILDING WILL BE CONSTRUCTED UTILIZING PRECAST CONCRETE PANELS. THE ELEC. CONTRACTOR IS REPSONSIBLE FOR COORDINATING WITH THE PRECASTER AND G.C. ALL LOCATIONS FOR RECESSED BOXES, CONDUIT SLEEVES, ETC. REQUIRED FOR INSTALLATION OF THE ELECTRICAL SYSTEMS INDICATED IN THE CONTRACT DOCUMENTS.
- THE ELECT. CONTRACTOR SHALL INCLUDE IN BASE BID ALL ELECTRICAL MATERIALS AND THE COSTS REQUIRED FOR TRAVEL TO THE PRECASTER'S SHOP (MAX 500 MILES FROM PROJECT LOCATION) FOR THE INSTALLATION OF THE ELECT. BOXES, CONDUITS, & ETC. PRIOR TO POURING OF THE PRECAST PANELS.
- SURFACE MOUNTED DEVICES, CONDUIT, ETC. IS PROHIBITED IN ALL AREAS ACCESSIBLE TO INMATES. ANY AND ALL SURFACE MOUNTED INSTALLATIONS SHALL BE PRE-APPROVED BY THE OWNER/ARCHITECT PRIOR TO INSTALLATION.

CORRECTIONAL FACILITY SPECIAL NOTES:

- ALL WIRING METHODS AND MATERIALS LOCATED IN AREAS ACCESSIBLE TO INMATES SHALL BE TAMPER-PROOF AND UL LISTED FOR USE IN THE ENVIRONMENT.
- ALL WIRE DEVICE COVERPLATES IN AREAS ACCESSIBLE TO INMATES SHALL BE TAMPER-PROOF & UL LISTED FOR THE LOCATION; KENALL MIGHT MAC SERIES; MODEL WSP/WPP-6 FASTENERS: TORX T-20 HEAD W/ CENTER PIN.
- SURFACE MOUNTED RACEWAY, DEVICES, ETC. IN ANY AREAS ACCESSIBLE TO INMATES IS PROHIBITED.

KEY NOTES:

1 FIRE ALARM CONTRACTOR SHALL PROVIDE AND INSTALL AN AUTOMATIC SMOKE DETECTION SYSTEM AS REQUIRED BY SECTION 907.2.6.3.3 OF THE IFC FOR A GROUP I-3 OCCUPANCY. THE AUTOMATIC SMOKE DETECTION SYSTEM SHALL UTILIZE AN INTELLIGENT VESDA AIR SAMPLING SYSTEM, SEE SPECIFICATIONS. CONTRACTOR IS RESPONSIBLE FOR A COMPLETE AN OPERABLE SYSTEM, INCLUDING ALL REQUIRED CORE-DRILLING AND ETC NEEDED TO INSTALL SYSTEM. ALL PIPING SHALL BE INSTALLED ABOVE CEILINGS, EXPOSED PIPING IS PROHIBITED. VESDA SYSTEM HEAD-END EQUIPMENT SHALL BE MONITORED/CONTROLLED BY BUILDING FIRE ALARM SYSTEM. ALL SAMPLING PORTS SHALL BE STAINLESS STEEL, TAMPERPROOF.

2 PROVIDE RELAY/MONITOR MODULES AS REQUIRED FOR FIRE ALARM SYSTEM MONITORING OF FIRE SPRINKLER CONTROL VALVE FOR SHUT-OFF OF FIRE SPRINKLER SERVICE TO CELLS, CONTROL VALVE TO BE CONTROLLED BY JAIL SECURITY INTEGRATION SYSTEM. FIRE ALARM SYSTEM SHALL PROVIDE AN ALARM CONDITION WHENEVER VALVE IS CLOSED. COORDINATE EXACT LOCATION WITH FIRE SPRINKLER CONTRACTOR.

3 DUCT-SMOKE DETECTOR PROVIDED WITH HVAC UNIT, E.C. SHALL CONNECT DETECTOR TO BUILDING FIRE ALARM SYSTEM. DETECTOR SHALL SHUT-DOWN ASSOCIATED HVAC UNIT UPON ACTIVATION. ELECT. CONTRACTOR SHALL ALSO PROVIDE AND INSTALL REMOTE TEST SWITCH, INSTALL FLUSH IN CEILING NEAR LOCATION OF DUCT-SMOKE DETECTOR AS REQUIRED BY LOCAL AHJ.

4 SMOKE EXHAUST FAN SHALL BE CONTROLLED BY BUILDING FIRE ALARM SYSTEM, FAN SHALL BE ACTIVATED WHEN BUILDING FIRE ALARM SYSTEM IS IN ALARM. FAN SHALL ALSO BE OVERRIDDEN BY JAIL SECURITY SYSTEM AT THE CONTROL ROOM. PROVIDE ALL REQUIRED RELAY MODULES, ETC FOR CONTROL OF FAN. COORDINATE WITH M.C.

KEY PLAN:

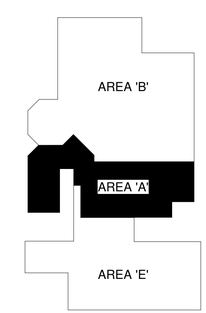

PROFESSIONAL ENGINEER REGISTERED 13053 02/14/25 STATE OF IDAHO SHAWN A. MEADOR

PROJECT #: 2496

PAYNE Engineering Inc.
Consulting Engineers
1823 E. Center
Pocatello, Idaho 83201
tel (208) 232-4439
www.payneengineeringinc.com

DATE	REVISION
02/14/2025	ISSUED FOR PERMIT

PHASE 1 PART B FOR:
TWIN FALLS COUNTY - WRIGHT AVE JAIL
2515 Wright Ave, Twin Falls, ID 83301
MEZZANINE FIRE ALARM PLAN - AREA 'B'

Laughlin Ricks Architecture
architecture/planning
134 3RD AVE. E. * Twin Falls, Idaho 83301
PHONE: (208) 736-8050

DATE: 02/14/25
SAM Drawn
TEP Checked
#23029 PROJECT #

E1B-4.1B

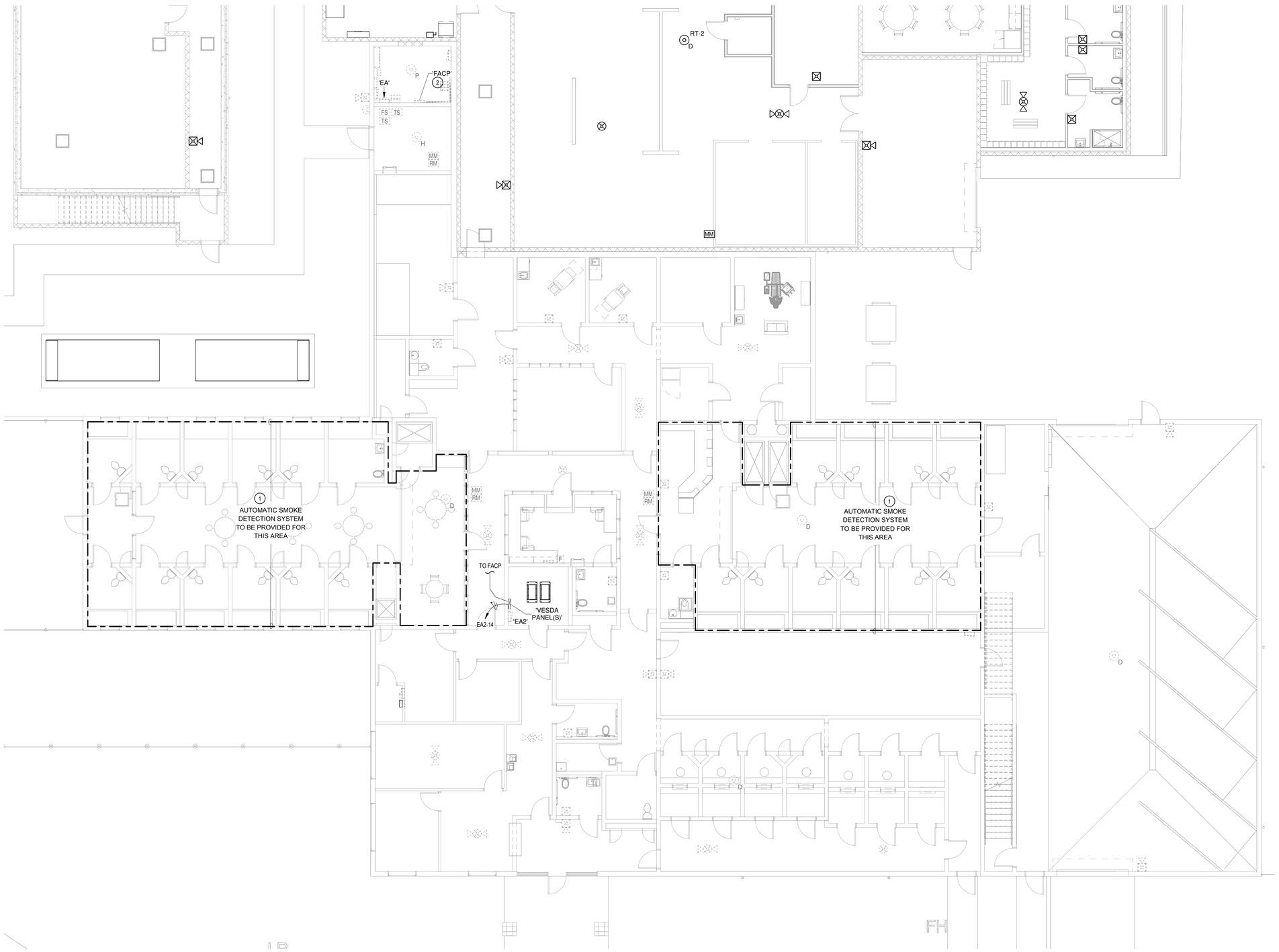

1 MAIN FLOOR FIRE ALARM PLAN - AREA 'E'

SCALE: 1/8" = 1'-0"

0" 8' 16'

NORTH

FIRE ALARM EXPANSION NOTES:

A. PROVIDE ALL EQUIPMENT, MATERIALS AND LABOR NECESSARY TO EXPAND THE EXISTING POTTER 1000 FIRE ALARM SYSTEM. THE SYSTEM ADDITION SHALL BE CONNECTED DIRECTLY TO THE EXISTING MAIN FIRE ALARM PANEL.
THE INSTALLATION SHALL BE AS RECOMMENDED BY THE MANUFACTURER AND ACCEPTED BY THE LOCAL AHJ. WHEN THE SYSTEM IS COMPLETE, A FACTORY REPRESENTATIVE SHALL TEST THE SYSTEM, MAKE ADJUSTMENTS AND PLACE THE SYSTEM IN OPERATING ORDER.

B. WITHIN 30 DAYS AFTER THE CONTRACT AWARD AND PRIOR TO THE PURCHASE OF ANY EQUIPMENT, THE FIRE ALARM SYSTEM CONTRACTOR SHALL SUBMIT FOR APPROVAL SIX (6) COPIES OF THE FOLLOWING:
   a. A LIST OF MATERIALS THAT ARE TO BE USED ON THE PROJECT, INCLUDING MANUFACTURER, MODEL NUMBER AND TECHNICAL INFORMATION.
   b. PRELIMINARY CIRCUIT DIAGRAMS SHOWING INTERCONNECTION OF ALL MONITORING, NOTIFICATION AND ANNUNCIATION DEVICES, PANELS AND WIRING COUNTS. DIAGRAMS ARE TO BE 11"X17", DONE IN A GOOD WORKMAN LIKE MANNER.
   c. TECHNICAL MANUALS FOR ALL OF THE EQUIPMENT THAT IS TO BE USED ON THE PROJECT.
   d. SUBMIT SHOP DRAWINGS AND REQUIRED CALCULATIONS TO THE LOCAL AHJ.
   e. OBTAIN A WRITTEN LETTER OF ACCEPTANCE OF THE PROPOSED SYSTEM AND INCLUDE WITH THE SHOP DRAWING SUBMITTAL TO THE ENGINEER.

C. CONTRACTOR SHALL PROVIDE AND INSTALL ALL REQUIRED POWER SUPPLIES, ELECTRONICS AND CONNECTIONS TO MODIFY EXISTING SYSTEM TO ACCEPT NEW ADDITION. THE COMPLETE SYSTEM SHALL MAINTAIN A UL LISTING.

D. ELECTRICAL CONTRACTOR SHALL INCLUDE A $2,000.00 CASH ALLOWANCE IN THE BID FOR MISCELLANEOUS ADDITIONS AND/OR REQUIREMENTS IMPOSED BY THE LOCAL AHJ.

CORRECTIONAL FACILITY SPECIAL NOTES:

- ALL WIRING METHODS AND MATERIALS LOCATED IN AREAS ACCESSIBLE TO INMATES SHALL BE TAMPER-PROOF AND UL LISTED FOR USE IN THE ENVIRONMENT.
- ALL WIRE DEVICE COVERPLATES IN AREAS ACCESSIBLE TO INMATES SHALL BE TAMPER-PROOF & UL LISTED FOR THE LOCATION; KENALL MIGHT MAC SERIES; MODEL WSP/WPP-6 FASTENERS: TORX T-20 HEAD W/ CENTER PIN.
- SURFACE MOUNTED RACEWAY, DEVICES, ETC. IN ANY AREAS ACCESSIBLE TO INMATES IS PROHIBITED.

KEY NOTES:

1 FIRE ALARM CONTRACTOR SHALL PROVIDE AND INSTALL AN AUTOMATIC SMOKE DETECTION SYSTEM AS REQUIRED BY SECTION 907.2.6.3.3 OF THE IFC FOR A GROUP I-3 OCCUPANCY. THE AUTOMATIC SMOKE DETECTION SYSTEM SHALL UTILIZE AN INTELLIGENT VESDA AIR SAMPLING SYSTEM, SEE SPECIFICATIONS. CONTRACTOR IS RESPONSIBLE FOR A COMPLETE AN OPERABLE SYSTEM, INCLUDING ALL REQUIRED CORE-DRILLING AND ETC NEEDED TO INSTALL SYSTEM. ALL PIPING SHALL BE INSTALLED ABOVE CEILINGS, EXPOSED PIPING IS PROHIBITED. VESDA SYSTEM HEAD-END EQUIPMENT SHALL BE MONITORED/CONTROLLED BY BUILDING FIRE ALARM SYSTEM. ALL SAMPLING PORTS SHALL BE STAINLESS STEEL, TAMPERPROOF.

2 EXISTING POTTER AFC-1000 FIRE ALARM PANEL INSTALLED IN PHASE 1A SHALL BE EXPANDED AS REQUIRED PHASE 1B ADDITION, REFER TO FIRE ALARM EXPANSION NOTES THIS SHEET. PROVIDE ADDITIONAL NOTIFICATION PANELS, DEVICES, MODULES, ETC. FOR A COMPLETE BUILDING FIRE ALARM SYSTEM FOR PHASE 1A & 1B.

KEY PLAN:

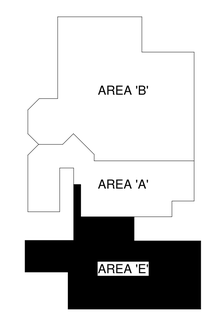

PROFESSIONAL ENGINEER
REGISTERED
13053
02/14/25
STATE OF IDAHO
SHAWN A. MEADOR

PROJECT #: 2496

PAYNE Engineering Inc.
Consulting Engineers
1823 E. Center
Pocatello, Idaho 83201
tel (208) 232-4439
www.payneengineeringinc.com

DATE	REVISION
02/14/2025	ISSUED FOR PERMIT

PHASE 1 PART B FOR:
TWIN FALLS COUNTY - WRIGHT AVE JAIL
2515 Wright Ave, Twin Falls, ID 83301
MAIN FLOOR FIRE ALARM PLAN - AREA 'E'

Laughlin Ricks Architecture
architecture/planning
134 3RD AVE. E. * Twin Falls, Idaho 83301
PHONE: (208) 736-8050

DATE: 02/14/25

SAM	TEP
Drawn	Checked

#23029
PROJECT #

E1B-4.2E

GENERAL NOTES:

A. E.C. SHALL REFER TO FOOD SERVICE DRAWINGS (FS) FOR ADDITIONAL REQUIREMENTS AND SPECIFIC ELECTRICAL ROUGH-IN AND CONNECTION REQUIREMENTS FOR KITCHEN EQUIPMENT.

B. ALL 120V, 15A AND 20A RECEPTACLES INSTALLED IN THE KITCHEN AREA SHALL BE GFCI TYPE RECEPTACLES. IF RECEPTACLE IS NOT READILY ACEESSIBLE, FURNISH GFCI TYPE BREAKER TO SUPPLY RECEPTACLE CIRCUIT.

C. E.C. SHALL UTILIZE CONDUIT SEAL-OFF FOR ALL CONDUIT ROUTED THROUGH FREEZER/COOLERS AS REQUIRED BY THE NEC.

CORRECTIONAL FACILITY SPECIAL NOTES:

- ALL WIRING METHODS AND MATERIALS LOCATED IN AREAS ACCESSIBLE TO INMATES SHALL BE TAMPER-PROOF AND UL LISTED FOR USE IN THE ENVIRONMENT.
- ALL WIRE DEVICE COVERPLATES IN AREAS ACCESSIBLE TO INMATES SHALL BE TAMPER-PROOF & UL LISTED FOR THE LOCATION; KENALL MIGHT MAC SERIES; MODEL WSP/WPP-6 FASTENERS: TORX T-20 HEAD W/ CENTER PIN.
- SURFACE MOUNTED RACEWAY, DEVICES, ETC. IN ANY AREAS ACCESSIBLE TO INMATES IS PROHIBITED.

KEY NOTES:

1 CONNECTION TO OVERHEAD DOOR MOTOR, COORDINATE CONNECTION WITH EQUIPMENT PRIOR TO ROUGH-IN. PROVIDE CONDUIT AND CONDUCTORS TO PUSH-BUTTON STATION PER MANUFACTURERS REQUIREMENTS. DOOR SHALL BE CONTROLLED BY JAIL SECURITY SYSTEM, COORDINATE INTERCONNECTIONS WITH JAIL SECURITY INTEGRATION CONTRACTOR.

2 PROVIDE LOCAL DISCONNECT FOR EQUIPMENT, FIELD LOCATE IN ACCESSIBLE LOCATION.

3 RECEPTACLE MOUNTED TO HVAC UNIT, COORDINATE MOUNTING WITH M.C. PRIOR TO ROUGH-IN.

PRECAST CONCRETE ELECTRICAL ROUGH-IN:

- THIS BUILDING WILL BE CONSTRUCTED UTILIZING PRECAST CONCRETE PANELS. THE ELEC. CONTRACTOR IS REPSONSIBLE FOR COORDINATING WITH THE PRECASTER AND G.C. ALL LOCATIONS FOR RECESSED BOXES, CONDUIT SLEEVES, ETC. REQUIRED FOR INSTALLATION OF THE ELECTRICAL SYSTEMS INDICATED IN THE CONTRACT DOCUMENTS.
- THE ELECT. CONTRACTOR SHALL INCLUDE IN BASE BID ALL ELECTRICAL MATERIALS AND THE COSTS REQUIRED FOR TRAVEL TO THE PRECASTER'S SHOP (MAX 500 MILES FROM PROJECT LOCATION) FOR THE INSTALLATION OF THE ELECT. BOXES, CONDUITS, & ETC. PRIOR TO POURING OF THE PRECAST PANELS.
- SURFACE MOUNTED DEVICES, CONDUIT, ETC. IS PROHIBITED IN ALL AREAS ACCESSIBLE TO INMATES. ANY AND ALL SURFACE MOUNTED INSTALLATIONS SHALL BE PRE-APPROVED BY THE OWNER/ARCHITECT PRIOR TO INSTALLATION.

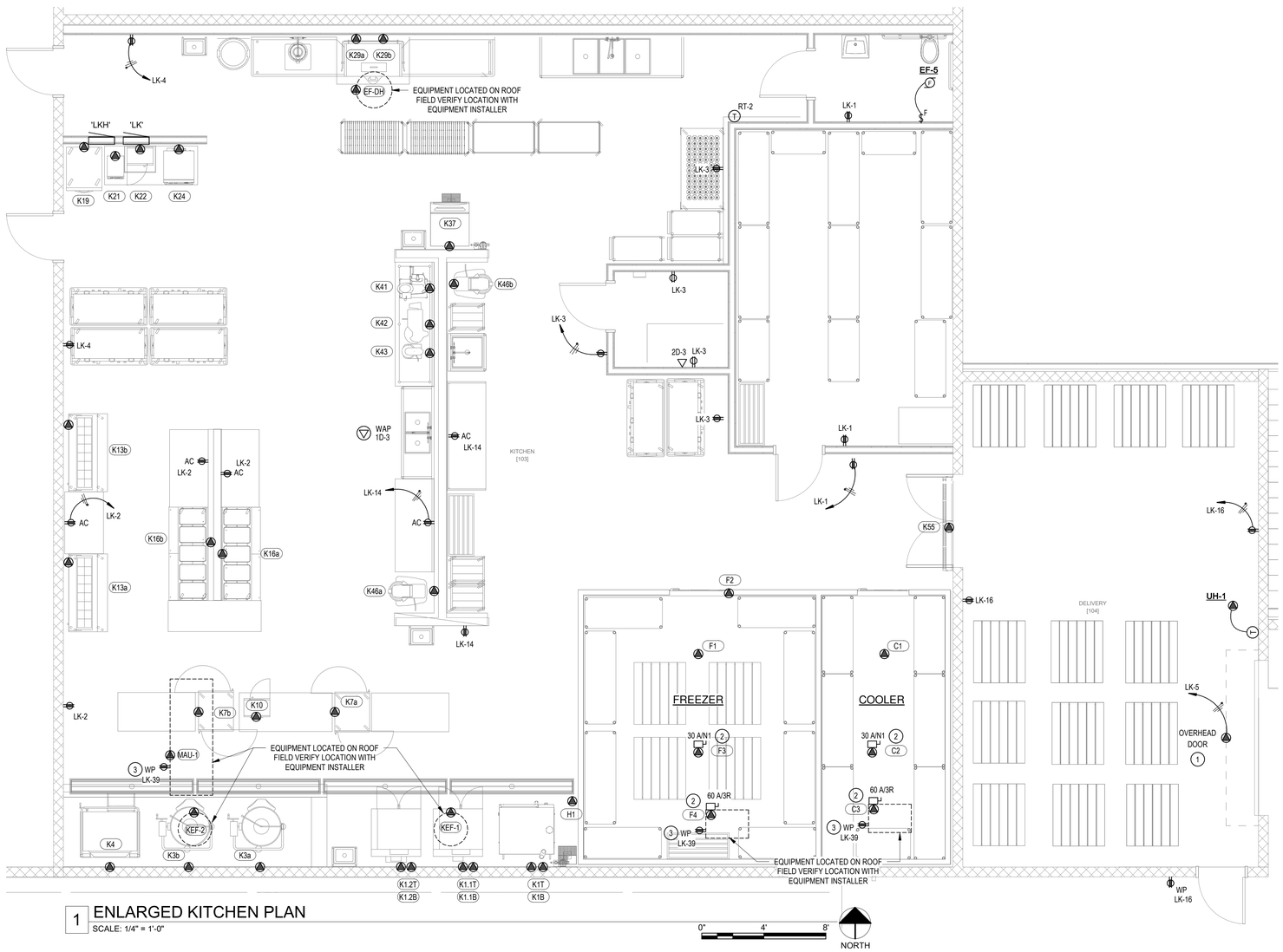

1 ENLARGED KITCHEN PLAN
SCALE: 1/4" = 1'-0"

KITCHEN & FREEZER/COOLER EQUIPMENT SCHEDULE

ITEM #	EQUIPMENT DESCRIPTION	VOLTS / PH.	AMPS	CIRCUIT	FEEDER	CONNECTION TYPE	NOTES
C1	COOLER LTG	120 V / 1PH.	2 A	LK-37	1/2"C.,2#12 + GND	DIRECT	4
C2	COOLER EVAPORATOR	120 V / 1PH.	2 A	LK-39	1/2"C.,2#12 + GND	DIRECT	3,4,6
C3	COOLER OUTDOOR COND.	208 V / 1PH.	15 A	LK-41,43	1/2"C.,2#12 + GND	DIRECT	3,4,6
F1	FREEZER LTG	120 V / 1PH.	2 A	LK-37	1/2"C.,2#12 + GND	DIRECT	4
F2	FREEZER DOOR HEAT	120 V / 1PH.	2 A	LK-37	1/2"C.,2#12 + GND	DIRECT	4
F3	FREEZER EVAPORATOR	208 V / 1PH.	2 A	LK-45,47	1/2"C.,2#12 + GND	DIRECT	3,4,5,6
F4	FREEZER OUTDOOR COND.	208 V / 1PH.	28 A	LK-49,51	3/4"C.,2#8 + GND	DIRECT	3,4,6
K1.1B	CONVECTION OVEN (BOTTOM UNIT)	208 V / 3PH.	31 A	LKH-2,4,6	3/4"C.,3#8 + GND	DIRECT	1
K1.1T	CONVECTION OVEN (TOP UNIT)	208 V / 3PH.	31 A	LKH-8,10,12	3/4"C.,3#8 + GND	DIRECT	1
K1.2B	CONVECTION OVEN (BOTTOM UNIT)	208 V / 3PH.	31 A	LKH-7,9,11	3/4"C.,3#8 + GND	DIRECT	1
K1.2T	CONVECTION OVEN (TOP UNIT)	208 V / 3PH.	31 A	LKH-13,15,17	3/4"C.,3#8 + GND	DIRECT	1
K1B	COMBI OVEN (BOTTOM UNIT)	208 V / 3PH.	103 A	LKH-25,27,29	1 1/4"C.,3#1 + GND	DIRECT	1
K1T	COMBI OVEN (TOP UNIT)	208 V / 3PH.	62 A	LKH-19,21,23	1 1/4"C.,3#3 + GND	DIRECT	1
K3a	ELECTRIC TILTING KETTLE	208 V / 3PH.	40 A	LKH-20,22,24	3/4"C.,3#8 + GND	DIRECT	1
K3b	ELECTRIC TILTING KETTLE	208 V / 3PH.	40 A	LKH-14,16,18	3/4"C.,3#8 + GND	DIRECT	1
K4	ELECTRIC TILTING BRAISING PAN	208 V / 1PH.	77 A	LKH-26,28	1 1/4"C.,2#3 + GND	DIRECT	1
K7a	PASS-THRU MODILE HEATED CABINET	120 V / 1PH.	13 A	LK-10	1/2"C.,2#12 + GND	NEMA 5-20R	
K7b	PASS-THRU MODILE HEATED CABINET	120 V / 1PH.	13 A	LK-8	1/2"C.,2#12 + GND	NEMA 5-20R	
K10	MICROWAVE OVEN	120 V / 1PH.	10 A	LK-12	1/2"C.,2#12 + GND	NEMA 5-20R	
K13a	REFRIGERATED COUNTER	120 V / 1PH.	7 A	LK-6	1/2"C.,2#12 + GND	NEMA 5-20R	
K13b	REFRIGERATED COUNTER	120 V / 1PH.	7 A	LK-6	1/2"C.,2#12 + GND	NEMA 5-20R	
K16a	HOT FOOD SERVING COUNTER	208 V / 1PH.	18 A	LK-29,31	1/2"C.,2#10 + GND	L6-30R	
K16b	HOT FOOD SERVING COUNTER	208 V / 1PH.	18 A	LK-33,35	1/2"C.,2#10 + GND	L6-30R	
K19	REACH-IN REFRIGERATOR	120 V / 1PH.	4 A	LK-4	1/2"C.,2#12 + GND	NEMA 5-20R	
K21	INDUCTION RANGE	120 V / 1PH.	10 A	LK-9	1/2"C.,2#12 + GND	NEMA 5-20R	
K22	MICROWAVE OVEN	120 V / 1PH.	10 A	LK-7	1/2"C.,2#12 + GND	NEMA 5-20R	
K24	COUNTERTOP CONVECTION OVEN	120 V / 1PH.	12 A	LK-11	1/2"C.,2#12 + GND	NEMA 5-20R	
K29a	DISHWASHER(120V)	120 V / 1PH.	30 A	LK-65	1/2"C.,2#10 + GND	DIRECT	1
K29b	DISHWASHER(HEATER)	208 V / 3PH.	30 A	LK-67,69,71	3/4"C.,3#8 + GND	DIRECT	1
K37	ICE MAKER	120 V / 1PH.	12 A	LK-13	1/2"C.,2#12 + GND	DIRECT	1
K41	FOOD SLICER	120 V / 1PH.	4 A	LK-14	1/2"C.,2#12 + GND	NEMA 5-20R (GFCI)	
K42	FOOD CUTTER	120 V / 1PH.	10 A	LK-17	1/2"C.,2#12 + GND	NEMA 5-20R	
K43	PLANETARY MIXER	120 V / 1PH.	5 A	LK-15	1/2"C.,2#12 + GND	NEMA 5-20R	
K46a	PLANETARY MIXER	208 V / 3PH.	6 A	LK-53,55,57	1/2"C.,3#12 + GND	DIRECT	1
K46b	PLANETARY MIXER	208 V / 3PH.	6 A	LK-59,61,63	1/2"C.,3#12 + GND	DIRECT	1
K55	AIR CURTAIN	120 V / 1PH.	6 A	LK-19	1/2"C.,2#12 + GND	DIRECT	1

KITCHEN & DISHWASHER HOOD EQUIPMENT SCHEDULE

ITEM #	EQUIPMENT DESCRIPTION	VOLTS / PH.	AMPS	HP	CIRCUIT	FEEDER	CONNECTION TYPE	NOTES
EF-DH	DISHWASHER HOOD EF	120 V / 1PH.	6 A	.5	LK-23	3/4"C.,2#12 + GND	DIRECT	8
H1	KITCHEN HOOD CONTROL PANEL	120 V / 1PH.	10 A	-	LK-21	1/2"C.,2#12 + GND	DIRECT	7
KEF-1	KITCHEN HOOD EXHAUST FAN	208 V / 3PH.	10 A	3	LK-56,58,60	3/4"C.,3#12 + GND	DIRECT	8
KEF-2	KITCHEN HOOD EXHAUST FAN	208 V / 3PH.	10 A	3	LK-62,64,66	3/4"C.,3#12 + GND	DIRECT	8
MAU-1	KITCHEN HOOD MAKE-UP AIR UNIT	208 V / 3PH.	27 A	10	LK-68,70,72	3/4"C.,3#6 + GND	DIRECT	8

KITCHEN EQUIPMENT SCHEDULE NOTES:

1. PROVIDE WITH LOCK-OUT TYPE BREAKER IN PANEL.
2. NOT USED
3. E.C. SHALL PROVIDE AND INSTALL LOCAL DISCONNECT SWITCH FOR EQUIPMENT, DISCONNECT RATING SHALL BE EQUAL OR GREATER THAN BREAKER SIZE.
4. PROVIDE REQUIRED CONDUIT SEAL-OFF FOR ALL PENETRATIONS INTO WALK-IN COOLER/FREEZER; COORDINATE WITH EQUIPMENT SUPPLIER.
5. E.C. SHALL PROVIDE AND INSTALL HEAT-TRACE FOR FREEZER LINES; COORDINATE LENGTHS WITH KITCHEN EQUIPMENT SUPPLIER.
6. PROVIDE CONDUIT AND CONDUCTORS BETWEEN COOLER/FREEZER EVAPORATOR AND CONDENSER AS REQUIRED BY MANUFACTURER.
7. PROVIDE CONNECTION TO KITCHEN HOOD CONTROL PANEL; PROVIDE ALL REQUIRED CONNECTIONS TO; LIGHTING, GAS SHUT-OFF AND ETC. COORDINATE WITH HOOD INSTALLER & SHOP DRAWINGS.
8. E.C. IS RESPONSIBLE FOR ALL REQUIRED CONNECTIONS BETWEEN HOOD EXHAUST/MAU FANS AND HOOD CONTROL PANEL. COORDINATE WITH CAPTIVAIRE DRAWINGS FOR REQUIRED LINE VOLTAGE AND CONTROL CONDUITS/CABLING.

GENERAL KITCHEN EQUIPMENT NOTES:

- REFER TO KITCHEN CONSULTANT DRAWINGS FOR ADDITIONAL INFORMATION AND ELECTRICAL REQUIREMENTS.
- REFER TO KITCHEN HOOD SHOP DRAWINGS FOR ADDITIONAL INFROMATION AND ALL REQUIRED ELECTRICAL CONNECTIONS.

PROFESSIONAL ENGINEER REGISTERED 13053 02/14/25 STATE OF IDAHO SHAWN A. MEADOR

PROJECT #: 2496

PAYNE Engineering Inc.
Consulting Engineers
1823 E. Center
Pocatello, Idaho 83201
tel (208) 232-4439
www.payneengineeringinc.com

DATE	REVISION
02/14/2025	ISSUED FOR PERMIT

PHASE 1 PART B FOR:
TWIN FALLS COUNTY - WRIGHT AVE JAIL
2515 Wright Ave, Twin Falls, ID 83301
ENLARGED KITCHEN PLAN

Laughlin Ricks Architecture
architecture/planning
134 3RD AVE. E. * Twin Falls, Idaho 83301
PHONE: (208) 736-8050

DATE: 02/14/25
SAM Drawn
TEP Checked
#23029 PROJECT #

E1B-5.0

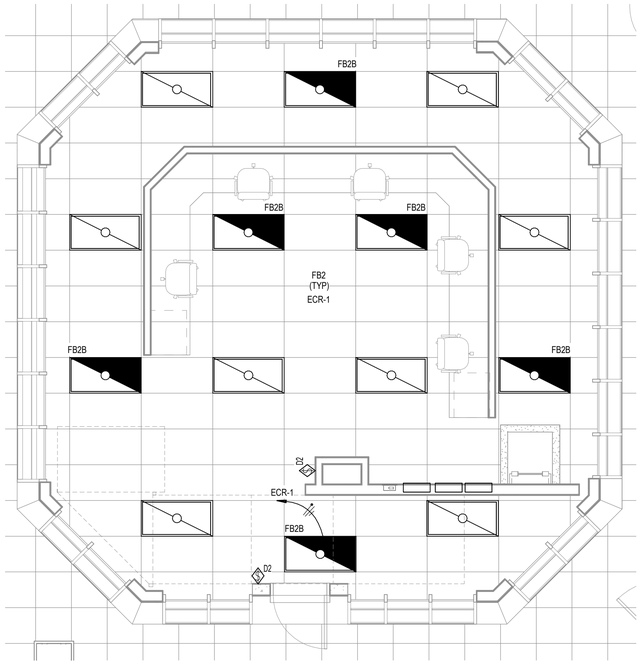

2 CONTROL ROOM UPPER LEVEL LIGHTING PLAN
SCALE: 1/4" = 1'-0"
0" 4' 8'
NORTH

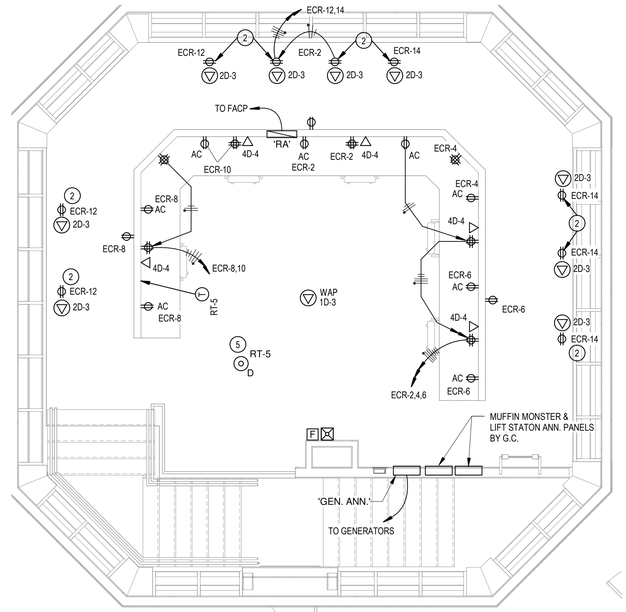

4 CONTROL ROOM UPPER LEVEL POWER/DATA PLAN
SCALE: 1/4" = 1'-0"
0" 4' 8'
NORTH

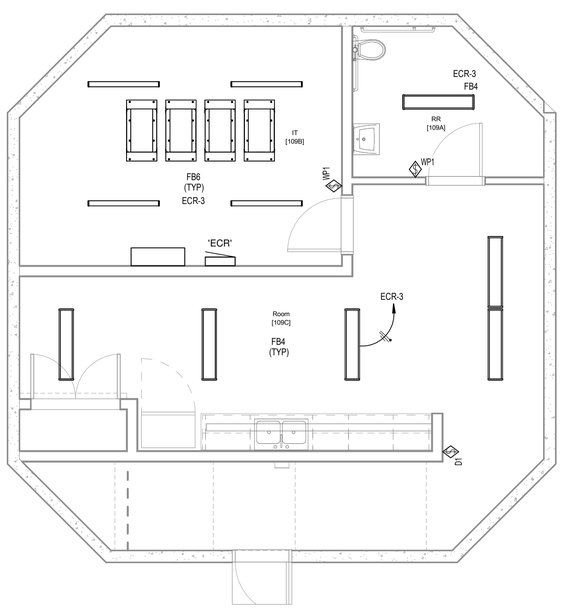

1 CONTROL ROOM LOWER LEVEL LIGHTING PLAN
SCALE: 1/4" = 1'-0"
0" 4' 8'
NORTH

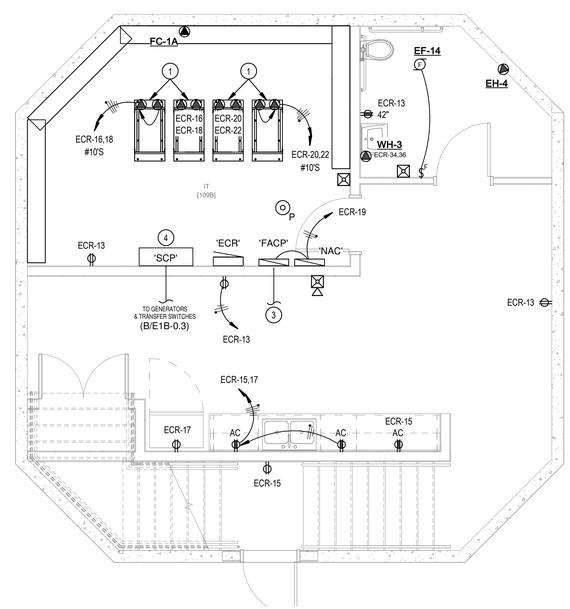

3 CONTROL ROOM LOWER LEVEL POWER/DATA PLAN
SCALE: 1/4" = 1'-0"
0" 4' 8'
NORTH

GENERAL NOTES:

A. REFER TO SYMBOL SCHEDULE SHEET FOR PROJECT GENERAL NOTES AND GENERAL NOTES ASSOCIATED WITH THE INSTALLATION OF EACH SYSTEM, INCLUDINB BUT NOT LIMITED TO; LIGHTING, POWER, FIRE ALARM, SPECIAL SYSTEMS, ETC.

PRECAST CONCRETE ELECTRICAL ROUGH-IN:

- THIS BUILDING WILL BE CONSTRUCTED UTILIZING PRECAST CONCRETE PANELS. THE ELEC. CONTRACTOR IS REPSONSIBLE FOR COORDINATING WITH THE PRECASTER AND G.C. ALL LOCATIONS FOR RECESSED BOXES, CONDUIT SLEEVES, ETC. REQUIRED FOR INSTALLATION OF THE ELECTRICAL SYSTEMS INDICATED IN THE CONTRACT DOCUMENTS.
- THE ELECT. CONTRACTOR SHALL INCLUDE IN BASE BID ALL ELECTRICAL MATERIALS AND THE COSTS REQUIRED FOR TRAVEL TO THE PRECASTER'S SHOP (MAX 500 MILES FROM PROJECT LOCATION) FOR THE INSTALLATION OF THE ELECT. BOXES, CONDUITS, & ETC. PRIOR TO POURING OF THE PRECAST PANELS.
- SURFACE MOUNTED DEVICES, CONDUIT, ETC. IS PROHIBITED IN ALL AREAS ACCESSIBLE TO INMATES. ANY AND ALL SURFACE MOUNTED INSTALLATIONS SHALL BE PRE-APPROVED BY THE OWNER/ARCHITECT PRIOR TO INSTALLATION.

KEY NOTES:

1 PROVIDE AND INSTALL (4) NEMA L4-30R RECEPTACLES AT RACKS, (2) RECEPTACLES ON A CIRCUIT.
2 RECEPTACLE MOUNTED IN CEILING FOR SUSPENDED SECURITY MONITORS, FIELD VERIFY PLACEMENT WITH EQUIPMENT INSTALLER PRIOR TO ROUGH-IN.
3 PROVIDE CONDUIT/CONDUCTORS TO EXISTING POTTER AFC-1000 FACP LOCATED IN EXISTING ELEC. ROOM OF PHASE 1A FOR INTERCONNECTION/NETWORKING OF FIRE ALARM SYSTEM.
4 GENERATOR SUPERVISORY CONTROL PANEL FOR MANUAL CONTROL AND REMOTE FUNCTIONALITY OF GENERATORS. PROVIDE (1) 1"C. W/CONDUCTORS TO EA. GENERATOR AND (1) 1"C., W/CONDUCTORS TO EACH TRANSFER SWITCH AS REQUIRED BY GENERATOR MANUFACTURER. REFER TO TYPICAL GENERATOR CONTROL RISER DIAGRAM.
5 DUCT-SMOKE DETECTOR PROVIDED WITH HVAC UNIT, E.C. SHALL CONNECT DETECTOR TO BUILDING FIRE ALARM SYSTEM. DETECTOR SHALL SHUT-DOWN ASSOCIATED HVAC UNIT UPON ACTIVATION. ELECT. CONTRACTOR SHALL ALSO PROVIDE AND INSTALL REMOTE TEST SWITCH, INSTALL FLUSH IN CEILING NEAR LOCATION OF DUCT-SMOKE DETECTOR AS REQUIRED BY LOCAL AHJ.

DATE	REVISION
02/14/2025	ISSUED FOR PERMIT

PHASE 1 PART B FOR:
TWIN FALLS COUNTY - WRIGHT AVE JAIL
2515 Wright Ave, Twin Falls, ID 83301
ENLARGED CONTROL ROOM POWER/LIGHITNG PLANS

Laughlin Ricks Architecture
architecture/planning
134 3RD AVE. E. * Twin Falls, Idaho 83301
PHONE: (208) 736-8050

PROFESSIONAL ENGINEER REGISTERED 13053 02/14/25 STATE OF IDAHO SHAWN A. MEADOR

PROJECT #: 2496

PAYNE Engineering Inc. Consulting Engineers
1823 E. Center
Pocatello, Idaho 83201
tel (208) 232-4439
www.payneengineeringinc.com

DATE: 02/14/25
SAM (Drawn) TEP (Checked)
#23029 PROJECT #

E1B-5.1

CIRCUIT LEGEND (COPPER)			CIRCUIT LEGEND (COPPER)			CIRCUIT LEGEND (COPPER)			CIRCUIT LEGEND (COPPER)			
3 PHASE, 4 WIRE SERVICES			3 PHASE, 3 WIRE & 1 PHASE FEEDERS			3 PHASE, 4 WIRE FEEDERS			3 PHASE, DELTA-WYE DRY-TYPE XFMR SECONDARY FEEDERS			
CKT I.D.	CONDUIT & CONDUCTOR SIZE	CKT AMPS	CKT I.D.	CONDUIT & CONDUCTOR SIZE	CKT AMPS	CKT I.D.	CONDUIT & CONDUCTOR SIZE	CKT AMPS	CKT I.D.	CONDUIT & CONDUCTOR SIZE	XFMR KVA	SECONDARY OCPD
[S60]	[1"C.- 4#6]	60	[1F50]	[3/4"C.- 3#8, 1#10G]	50	[2F60]	[1"C.- 4#6, 1#10G]	60	[2T15]	[1"C.- 4#6, 1#8G]	15	60A
[S70]	[1 1/4"C.- 4#4]	70	[1F60]	[1"C.- 3#6, 1#10G]	60	[2F70]	[1 1/4"C.- 4#4, 1#8G]	70	[2T30]	[1 1/2"C.- 4#2, 1#6G]	30	110A
[S80]	[1 1/4"C.- 4#4]	80	[1F70]	[1 1/4"C.- 3#4, 1#8G]	70	[2F80]	[1 1/4"C.- 4#4, 1#8G]	80	[2T45]	[2"C.- 4#1/0, 1#4G]	45	150A
[S100]	[1 1/4"C.- 4#3]	100	[1F80]	[1 1/4"C.- 3#4, 1#8G]	80	[2F100]	[1 1/4"C.- 4#3, 1#8G]	100	[2T75]	[2 1/2"C.- 4#3/0, 1#2G]	75	200A
[S125]	[1 1/2"C.- 4#1]	125	[1F100]	[1 1/4"C.- 3#3, 1#8G]	100	[2F125]	[2"C.- 4#1, 1#6G]	125	[2T112]	2 ea. [2 1/2"C.- 4#3/0, 1#1/0G]	112.5	400A
[S150]	[2"C.- 4#1/0]	150	[1F125]	[1 1/2"C.- 3#1, 1#6G]	125	[2F150]	[2"C.- 4#1/0, 1#6G]	150	[2T150]	3 ea. [2 1/2"C.- 4#3/0, 1#2/0G]	150	600A
[S175]	[2"C.- 4#2/0]	175	[1F150]	[1 1/2"C.- 3#1/0, 1#6G]	150	[2F175]	[2"C.- 4#2/0, 1#6G]	175	[2T225]	3 ea. [3"C.- 4#300, 1#2/0G]	225	800A
[S200]	[2"C.- 4#3/0]	200	[1F175]	[2"C.- 3#2/0, 1#6G]	175	[2F200]	[2"C.- 4#3/0, 1#6G]	200	[2T300]	4 ea. [3"C.- 4#350, 1#3/0G]	300	1200A
[S225]	[2 1/2"C.- 4#4/0]	225	[1F200]	[2"C.- 3#3/0, 1#6G]	200	[2F225]	[2 1/2"C.- 4#4/0, 1#4G]	225	[2T500]	6 ea. [4"C.- 4#500, 1#3/0G]	500	2000A
[S250]	[2 1/2"C.- 4#250]	250	[1F225]	[2"C.- 3#4/0, 1#4G]	225	[2F250]	[2 1/2"C.- 4#250, 1#4G]	250				
[S300]	[2 1/2"C.- 4#350]	300	[1F250]	[2 1/2"C.- 3#250, 1#4G]	250	[2F300]	[3"C.- 4#350, 1#4G]	300				
[S400]	1 ea. [4"C.- 4#500]	400	[1F300]	[2 1/2"C.- 3#350, 1#4G]	300	[2F400]	2 ea. [2 1/2"C.- 4#3/0, 1#3G]	400				
[S600]	2 ea. [2 1/2"C.- 4#350]	600	[1F400]	2 ea. [2"C.- 3#3/0, 1#3G]	400	[2F600]	2 ea. [3"C.- 4#350, 1#1G]	600				
[S800]	3 ea. [3"C.- 4#300]	800	[1F600]	2 ea. [2 1/2"C.- 3#350, 1#1G]	600	[2F800]	3 ea. [3"C.- 4#300, 1#1/0G]	800				
[S1000]	3 ea. [3 1/2"C.- 4#500]	1000	[1F800]	3 ea. [2 1/2"C.- 3#300, 1#1/0G]	800	[2F1000]	3 ea. [3 1/2"C.- 4#500, 1#2/0G]	1000				
[S1200]	4 ea. [3"C.- 4#350]	1200	[1F1000]	3 ea. [3 1/2"C.- 3#500, 1#2/0G]	1000	[2F1200]	4 ea. [3"C.- 4#350, 1#3/0G]	1200				
[S1600]	5 ea. [3"C.- 4#400]	1600	[1F1200]	4 ea. [2 1/2"C.- 3#350, 1#3/0G]	1200	[2F1600]	6 ea. [3"C.- 4#300, 1#4/0G]	1600				
[S2000]	6 ea. [4"C.- 4#500]	2000	[1F1600]	6 ea. [2 1/2"C.- 3#300, 1#4/0G]	1600	[2F2000]	6 ea. [4"C.- 4#500, 1#250G]	2000				

Project:	TF Wright Ave Jail - PH1B	**ETAP** 22.5.0C	Page: 1
Location:	2515 Wright Ave, TF, Idaho		Date: 02-14-2025
Contract:	2496		SN: PAYNEENGIN
Engineer:	SHAWN MEADOR	Study Case: SC-ALL BUSES	Revision: Base
Filename:	TF Wright Ave Jail		Config.: Normal

FAULT CURRENT REPORT

3-Phase Fault Currents: (Prefault Voltage = 100 % of the Bus Nominal Voltage)

Bus		Device			Momentary Duty					Device Capability	
ID	kV	ID	Type	Symm. kA rms	X/R Ratio	M.F.	Asymm. kA rms	Asymm. kA Peak	Symm. kA rms	Asymm. kA rms	Asymm. kA Peak
ATS-E	0.480	ATS-E	Bus	32.834	2.4	1.072	35.202	59.126			
ATS-SB	0.480	ATS-SB	Bus	36.371	3.0	1.115	40.555	69.377			
PNL:ECR	0.208	PNL:ECR	Panelboard	4.147	0.9	1.001	4.152	6.070	10.000	12.500	
PNL:EHA	0.480	PNL:EHA	Panelboard	29.092	2.1	1.046	30.432	50.072	35.000	43.600	
PNL:EHB	0.480	PNL:EHB	Panelboard	4.609	0.3	1.000	4.609	6.518	14.000	17.500	
PNL:ELA	0.208	PNL:ELA	Panelboard	6.917	1.8	1.032	7.135	11.533	10.000	12.500	
PNL:HA	0.480	PNL:HA	Panelboard	32.986	2.3	1.062	35.031	58.445	35.000	43.600	
PNL:HB	0.480	PNL:HB	Panelboard	16.396	1.3	1.009	16.544	25.395	35.000	43.600	
PNL:HDPA	0.480	PNL:HDPA	Panelboard	35.330	2.9	1.108	39.130	66.785	65.000	81.100	
PNL:LA	0.208	PNL:LA	Panelboard	10.462	3.3	1.136	11.883	20.431	22.000	27.400	
PNL:LB	0.208	PNL:LB	Panelboard	4.154	1.6	1.018	4.230	6.670	10.000	12.500	
PNL:LDPA	0.208	PNL:LDPA	Panelboard	10.867	3.9	1.180	12.825	22.179	22.000	27.400	
PNL:LK	0.208	PNL:LK	Panelboard	9.308	2.5	1.080	10.053	16.961	10.000	12.500	
PNL:LKH	0.208	PNL:LKH	Panelboard	6.650	2.8	1.099	7.309	12.439	10.000	12.500	
SWB:MSB	0.480	SWB:MSB	Switchboard	37.472	3.1	1.123	42.097	72.178	65.000	81.100	

- Method: IEEE - X/R is calculated from separate R & X networks.
- Generator protective device duty is calculated based on maximum through fault current. Other protective device duty is calculated based on total fault current.

- The multiplication factors for high voltage circuit-breaker and high voltage bus momentary duty (asymmetrical and crest values) are calculated based on system X/R.

* Indicates a device with momentary duty exceeding the device capability.

GENERAL NOTES:

A. THESE PLANS HAVE BEEN PREPARED WITHOUT UTILITY COMPANY COMMENTS. THE E.C. SHALL VERIFY THE EXACT REQUIREMENTS FOR THE ELECTRIC AND TELEPHONE SERVICES WITH THE UTILITY COMPANY REPRESENTATIVES AND PROVIDE ALL WORK AND PAY ALL COSTS FOR A COMPLETE AND OPERATING SYSTEM, AS DIRECTED BY THE GOVERNING UTILITIES.

B. ALL UNDERGROUND CONDUIT INSTALLATION SHALL BE PROVIDED WITH TRACER WIRES FOR FUTURE LOCATING.

KEY NOTES:

1 PROVIDE AND INSTALL ENCLOSED CIRCUIT BREAKER WITH SHUNT-TRIP ACCESSORY. PROVIDE 1/2"C.,W#12 CONDUCTORS BETWEEN KITCHEN HOOD ANSUL SYSTEM AND SHUNT-TRIP BREAKER. BREAKER SHALL TRIP UPON ACTIVATION OF KITCHEN HOOD ANSUL SYSTEM. COORDINATE WITH KITCHEN HOOD INSTALLER/CONTRACTOR.

2 GENERATOR SUPERVISORY CONTROL PANEL FOR MANUAL CONTROL AND REMOTE FUNCTIONALITY OF GENERATORS. PROVIDE (1) 1"C. W/CONDUCTORS TO EA. GENERATOR AND (1) 1"C., W/CONDUCTORS TO EACH TRANSFER SWITCH AS REQUIRED BY GENERATOR MANUFACTURER. REFER TO TYPICAL GENERATOR CONTROL RISER DIAGRAM.

3 DEDICATED NATURAL GAS SERVICE TO GENERATOR SIZED FOR GENERATOR CAPACITY, E.C. SHALL COORDINATE WITH PLUMBING CONTRACTOR AND LOCAL GAS CO. FOR SERVICE TO GENERATORS.

4 E.C. SHALL PROVIDE AND INSTALL OPTIONAL PULL BOX ON SIDE OF ATS FOR BOTTOM CONDUIT ENTRY TO ATS, COORDINATE WITH ATS MANUFACTURER PRIOR TO ORDERING.

5 BASIS OF DESIGN FOR GENERATOR PARALLELLING IS DONE INTEGRAL TO THE GENERATOR THROUGH CONTROLLABLE BREAKERS. IF AN ALTERNATE APPROVED MANUFACTURER REQUIRES EXTERNAL ELECTRICAL EQUIPMENT TO PROVIDE GENERATOR PARALLELLING, IT IS THE RESPONSIBILITY OF THE E.C. TO PROVIDE ALL ADDITIONAL EQUIPMENT REQUIRED BY THE GENERATOR MANUFACTURER IN BASE BID. E.C. IS ALSO RESPONSIBLE FOR LOCATING ANY ADDITION EQUIPMENT AND GET APPROVAL FROM THE DESIGN TEAM ON THE PROPOSED LOCATIONS.

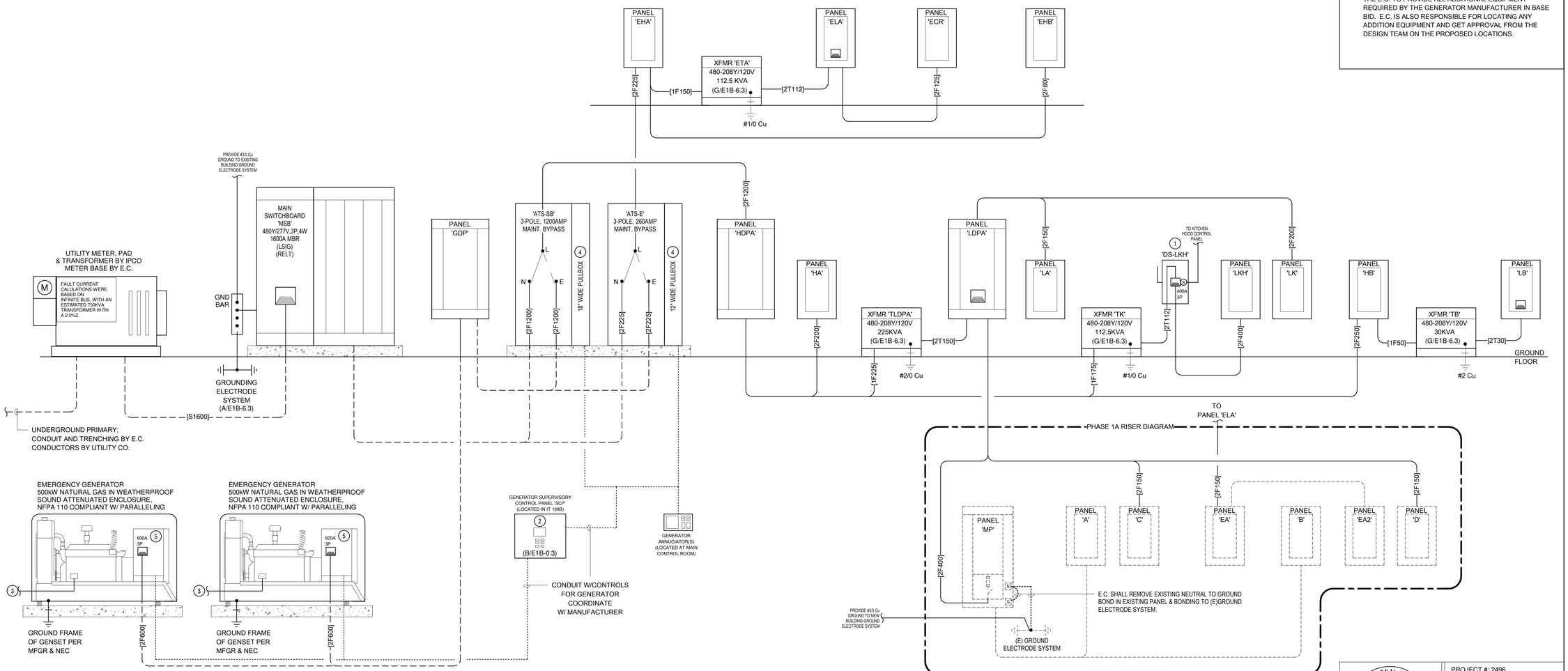

1 PHASE 1B - POWER RISER DIAGRAM

SCALE: NONE

PROFESSIONAL ENGINEER REGISTERED 13053 02/14/25 STATE OF IDAHO SHAWN A. MEADOR

PROJECT #: 2496

PAYNE Engineering Inc. Consulting Engineers
1823 E. Center
Pocatello, Idaho 83201
tel (208) 232-4439
www.payneengineeringinc.com

DATE	REVISION
02/14/2025	ISSUED FOR PERMIT

PHASE 1 PART B FOR:
TWIN FALLS COUNTY - WRIGHT AVE JAIL
2515 Wright Ave, Twin Falls, ID 83301
POWER RISER DIAGRAM & SCHEDULES

Laughlin Ricks Architecture
architecture/planning
134 3RD AVE. E. * Twin Falls, Idaho 83301
PHONE: (208) 736-8050

DATE: 02/14/25
SAM Drawn TEP Checked
#23029 PROJECT #

E1B-6.0

PANEL: MSB

PAYNE ENGINEERING

LOCATION: | **VOLTAGE:** 480/277 Wye | **SCCR:** 65k
FED FROM: | **PHASES:** 3 | **TYPE:** MBR
MOUNTING: FLOOR | **WIRES:** 4 | **BUS AMPS:** 1600 A
ENCLOSURE: NEMA 1 | **BUSSING:** SEE SPEC'S | **MBR AMPS:** 1600 A (LSIG & RELT)
MFG/MODEL: ABB/RELIAGEAR SB | **DIMENSIONS:** | **FEED:** BOTTOM

PROJECT: TWIN FALLS COUNTY - WRIGHT AVE JAIL

NOTES:
PROVIDE SWITCHBOARD WITH INTEGRAL SURGE PROTECTION DEVICE

CKT	CIRCUIT DESCRIPTION	POLES	FRAME AMPS	TRIP AMPS	LOAD	REMARKS
1	PANEL HDPA (VIA ATS)	3	1200 A	1200 A	949 kW	(LSIG & RELT TYPE BREAKER)
2	PANEL LSHA (VIA ATS)	3	225 A	225 A	76 kW	
3	SPARE	3	200 A	200 A	0 kW	
4	SPARE	3	200 A	200 A	0 kW	
5	PREPARED SPACE	3	--	--	--	
6	SPD DEVICE	3	30 A	30 A	0 kW	
				TOTAL CONN....	1025 kW	
				TOTAL AMPS:	1233 A	

BUILDING LOAD SUMMARY

LOAD CLASSIFICATION	CONNECTED...	DEMAND FACTOR	EST. DEMAND	BUILDING TOTALS	
Equipment	19816 VA	100.00%	19816 VA		
HVAC	254127 VA	100.00%	254127 VA	TOTAL CONN. LOAD:	1025 kW
Lighting	33593 VA	100.00%	33593 VA	TOTAL EST. DEMAND:	909 kW
Motor	64466 VA	104.84%	67584 VA	TOTAL CONN. AMPS:	1233 A
Other	1250 VA	100.00%	1250 VA	TOTAL EST. DEMAND AMPS:	1093 A
Receptacle	68410 VA	57.31%	39205 VA		
Elec. Heating	34100 VA	100.00%	34100 VA		
Receptacle(Future)	37000 VA	63.51%	23500 VA		
Lighting(Future)	74000 VA	100.00%	74000 VA		
HVAC(Future)	220000 VA	100.00%	220000 VA		
Kitchen Equipment - Non-Dwelling Unit	218501 VA	65.00%	142026 VA		

PANEL: HDPA

PAYNE ENGINEERING

LOCATION: | **VOLTAGE:** 480/277 Wye | **SCCR:** 65k
FED FROM: MSB | **PHASES:** 3 | **TYPE:** MLO
MOUNTING: SURFACE | **WIRES:** 4 | **BUS AMPS:** 1200 A
ENCLOSURE: NEMA 1 | **BUSSING:** SEE SPEC'S | **MBR AMPS:** N/A
MFG/ MODEL: ABB/ReliaGear neXT | **DIMENSIONS:** 48"W x 11.5"D x **"H | **FEED:** TOP

PROJECT: TWIN FALLS COUNTY - WRIGHT AVE JAIL

NOTES:
PROVIDE WITH INTERNAL SURGE PROTECTION DEVICE

CKT	CIRCUIT DESCRIPTION	NOTE	AMPS	P	A		B		C		P	AMPS	NOTE	CIRCUIT DESCRIPTION	CKT
1					77089	29328									2
3	XFMR TLDPA		225 A	3			75653	28497			3	200 A		PANEL HA	4
5									76218	29105					6
7					52319	51148									8
9	XFMR TLKH		175 A	3			52319	51863			3	250 A		PANEL HB	10
11									44311	50186					12
13					0	48667									14
15	SPARE	--	200 A	3			0	48667			3	400 A		PANEL HC (FUTURE PHASE)	16
17									0	48667					18
19					0	61667									20
21	SPD DEVICE	--	30 A	3			0	61667			3	400 A		PANEL HD (FUTURE PHASE)	22
23									0	61667					24
				TOTAL LOAD:	320.2 kVA		318.7 kVA		310.2 kVA						
				TOTAL AMPS:	1161 A		1155 A		1120 A						

PANEL LOAD SUMMARY

LOAD CLASSIFICATION	CONNECTED LOAD	DEMAND FACTOR	EST. DEMAND	PANEL TOTALS	
Equipment	19816 VA	100.00%	19816 VA		
HVAC	241874 VA	100.00%	241874 VA	TOTAL CONN. LOAD:	948726 VA
Lighting	21874 VA	100.00%	21874 VA	TOTAL EST. DEMAND:	847059 VA
Motor	47627 VA	106.55%	50745 VA	TOTAL CONN. AMPS.:	1141 A
Receptacle	39620 VA	62.62%	24810 VA	TOTAL EST. DEMAND AMPS:	1019 A
Elec. Heating	28500 VA	100.00%	28500 VA		
Receptacle(Future)	37000 VA	63.51%	23500 VA		
Lighting(Future)	74000 VA	100.00%	74000 VA		
HVAC(Future)	220000 VA	100.00%	220000 VA		
Kitchen Equipment - Non-Dwelling Unit	218501 VA	65.00%	142026 VA		

BRK NOTES:
A = ARC-FAULT BREAKER | GP = GFEPD BREAKER | LCP = CRKT TO BE ROUTED THROUGH LTG CONTROL PANEL
S = SHUNT-TRIP BREAKER | G = GFCI BREAKER | R = RED HANDLED, LOCK-OUT TYPE

PANEL: GDP

PAYNE ENGINEERING

LOCATION: | **VOLTAGE:** 480/277 Wye | **SCCR:** 42k
FED FROM: | **PHASES:** 3 | **TYPE:** MLO
MOUNTING: SURFACE | **WIRES:** 4 | **BUS AMPS:** 1200 A
ENCLOSURE: NEMA 1 | **BUSSING:** SEE SPEC'S | **MBR AMPS:** N/A
MFG & MODEL: ABB/ReliaGear neXT | **DIMENSIONS:** 48"W x 11.5"D x **"H | **FEED:** BOTTOM

PROJECT: TWIN FALLS COUNTY - WRIGHT AVE JAIL

NOTES:
PROVIDE WITH INTERNAL SURGE PROTECTION DEVICE

CKT	CIRCUIT DESCRIPTION	NOTE	AMPS	P	A		B		C		P	AMPS	NOTE	CIRCUIT DESCRIPTION	CKT
1					0	0									2
3	ATS-SB (STAND-BY)	--	1200 A	3			0	0			3	225 A	--	ATS-E (EMERGENCY)	4
5									0	0					6
7	1200A BREAKER SPACE	--	--	2	--	0									8
9							--	0			3	200 A	--	SPARE	10
11									--	0					12
13	RELT SPACE	--	--	3	--	--									14
15							--	--			3	--	--	PREPARED SPACE	16
17									0	--					18
19	LOAD BANK CONNECTION	--	600 A	3	0	0									20
21							0	0			3	30 A	--	SPD DEVICE	22
23										0					24
				TOTAL LOAD:	0.0 kVA		0.0 kVA		0.0 kVA						
				TOTAL AMPS:	0 A		0 A		0 A						
				TOTAL ESTIMATED DEMAND AMPS:			0 A								

BRK NOTES:
A = ARC-FAULT BREAKER | GP = GFEPD BREAKER | LCP = CRKT TO BE ROUTED THROUGH LTG CONTROL PANEL
S = SHUNT-TRIP BREAKER | G = GFCI BREAKER | N = NEW CIRCUIT BREAKER, SIZE/TYPE AS INDICATED

PANEL: HA

PAYNE ENGINEERING

LOCATION: | **VOLTAGE:** 480/277 Wye | **SCCR:** 35k
FED FROM: HDPA | **PHASES:** 3 | **TYPE:** MLO
MOUNTING: SURFACE | **WIRES:** 4 | **BUS AMPS:** 225 A
ENCLOSURE: NEMA 1 | **BUSSING:** SEE SPEC'S | **MBR AMPS:** N/A
MFG & MODEL: ABB/PANELBOARD | **DIMENSIONS:** 20"W x 5.8"D x **"H | **FEED:** BOTTOM

PROJECT: TWIN FALLS COUNTY - WRIGHT AVE JAIL

NOTES:
PROVIDE WITH INTERNAL SURGE PROTECTION DEVICE

CKT	CIRCUIT DESCRIPTION	NOTE	AMPS	P	A		B		C		P	AMPS	NOTE	CIRCUIT DESCRIPTION	CKT
1	Lighting		20 A	1	2010	480					1	20 A		Lighting - Exterior West	2
3	Lighting		20 A	1			2115	0			1	20 A	--	SPARE	4
5	Lighting		20 A	1					2726	0	1	20 A	--	SPARE	6
7	SPARE	--	20 A	1	0	480					1	20 A		Lighting - Site	8
9	SPARE	--	20 A	1			0	0			1	20 A	--	SPARE	10
11	SPARE	--	20 A	1					0	0	1	20 A	--	SPARE	12
13	SPARE	--	20 A	1	0	0					1	20 A	--	SPARE	14
15	SPARE	--	20 A	1			0	0			1	20 A	--	SPARE	16
17	SPARE	--	20 A	1					0	0	1	20 A	--	SPARE	18
19					2439	6429									20
21	HVAC RT-1		15 A	3			2439	6429			3	35 A		HVAC RT-5	22
23									2439	6429					24
25					6429	2439									26
27	HVAC RT-2		35 A	3			6429	2439			3	15 A		HVAC RT-9	28
29									6429	2439					30
31					3104	2439									32
33	HVAC RT-3		20 A	3			3104	2439			3	15 A		HVAC RT-10	34
35									3104	2439					36
37					3104	0									38
39	HVAC RT-4		20 A	3			3104	0			3	30 A	--	SPD DEVICE	40
41									3104	0					42
				TOTAL LOAD:	29.3 kVA		28.5 kVA		29.1 kVA						
				TOTAL AMPS:	106 A		103 A		105 A						
				TOTAL ESTIMATED DEMAND AMPS:			105 A								

BRK NOTES:
A = ARC-FAULT BREAKER | GP = GFEPD BREAKER | LCP = CRKT TO BE ROUTED THROUGH LTG CONTROL PANEL
S = SHUNT-TRIP BREAKER | G = GFCI BREAKER | R = RED HANDLE BREAKER W/ LOCKING DEVICE

PANEL: HB

PAYNE ENGINEERING

LOCATION: | **VOLTAGE:** 480/277 Wye | **SCCR:** 35k
FED FROM: HDPA | **PHASES:** 3 | **TYPE:** MLO
MOUNTING: SURFACE | **WIRES:** 4 | **BUS AMPS:** 400 A
ENCLOSURE: NEMA 1 | **BUSSING:** SEE SPEC'S | **MBR AMPS:** N/A
MFG & MODEL: SQ. D/NF SERIES | **DIMENSIONS:** 20"W x 5.8"D x **"H | **FEED:** BOTTOM

PROJECT: TWIN FALLS COUNTY - WRIGHT AVE JAIL

NOTES:
PROVIDE WITH INTERNAL SURGE PROTECTION DEVICE

CKT	CIRCUIT DESCRIPTION	NOTE	AMPS	P	A		B		C		P	AMPS	NOTE	CIRCUIT DESCRIPTION	CKT
1	Lighting		20 A	1	960	1800					1	20 A		Lighting - Dorm 135	2
3	Lighting - Exterior North/East		20 A	1			800	3350			1	20 A		Ltg - Dayroom 135/Rec 136	4
5	Lighting - Dayroom 117		20 A	1					2000	1000	1	20 A		Lighting - Outdoor Rec Area	6
7	SPARE	--	20 A	1	0	0					1	20 A	--	SPARE	8
9	SPARE	--	20 A	1			0	0			1	20 A	--	SPARE	10
11	SPARE	--	20 A	1					0	0	1	20 A	--	SPARE	12
13	SPARE	--	20 A	1	0	0					1	20 A	--	SPARE	14
15	SPARE	--	20 A	1			0	0			1	20 A	--	SPARE	16
17	SPARE	--	20 A	1					0	0	1	20 A	--	SPARE	18
19	PREPARED SPACE	--	--	1	--	0					1	20 A	--	SPARE	20
21	PREPARED SPACE	--	--	1			--	--			1	--	--	PREPARED SPACE	22
23	PREPARED SPACE	--	--	1					--	--	1	--	--	PREPARED SPACE	24
25					7538	--					1	--	--	PREPARED SPACE	26
27	HVAC RT-6		40 A	3			7538	--			1	--	--	PREPARED SPACE	28
29									7538	--	1	--	--	PREPARED SPACE	30
31					7538	4157									32
33	HVAC RT-7		40 A	3			7538	4157			3	35 A		Lift Station	34
35									7538	4157					36
37					6429	2106									38
39	HVAC RT-8		35 A	3			6429	2106			3	20 A		Muffin Monster Grinder Pump	40
41									6429	2106					42
43					10641	3333									44
45	HVAC RT-11		50 A	3			10641	3333			3	50 A		Irrigation Pump Skid	46
47									10641	3333					48
49					6646	0									50
51	XFMR TB		50 A	3			6128	0			3	30 A	--	SPD DEVICE	52
53									5540	0					54
				TOTAL LOAD:	51.1 kVA		51.9 kVA		50.2 kVA						
				TOTAL AMPS:	185 A		188 A		181 A						
				TOTAL ESTIMATED DEMAND AMPS:			187 A								

BRK NOTES:
A = ARC-FAULT BREAKER | GP = GFEPD BREAKER | LCP = CRKT TO BE ROUTED THROUGH LTG CONTROL PANEL
S = SHUNT-TRIP BREAKER | G = GFCI BREAKER | R = RED HANDLE BREAKER W/ LOCKING DEVICE

PANEL: LDPA

PAYNE ENGINEERING

LOCATION: | **VOLTAGE:** 120/208 Wye | **SCCR:** 22k
FED FROM: TLDPA | **PHASES:** 3 | **TYPE:** MBR
MOUNTING: SURFACE | **WIRES:** 4 | **BUS AMPS:** 600 A
ENCLOSURE: NEMA 1 | **BUSSING:** SEE SPEC'S | **MBR AMPS:** 600 A
MFG/ MODEL: SQ. D/I-LINE | **DIMENSIONS:** 40"W x 11.5"D x **"H | **FEED:** BOTTOM

PROJECT: TWIN FALLS COUNTY - WRIGHT AVE JAIL

NOTES:
PROVIDE WITH INTEGRAL SURGE PROTECTION DEVICE

CKT	CIRCUIT DESCRIPTION	NOTE	AMPS	P	A		B		C		P	AMPS	NOTE	CIRCUIT DESCRIPTION	CKT
1					12685	8048									2
3	PANEL LA		150 A	3			11557	8888			3	150 A		PANEL C	4
5									13908	7740					6
7					24872	11697									8
9	PANEL LK		200 A	3			23360	13781			3	150 A		PANEL D	10
11									27000	13642					12
13					0	--									14
15	SPARE	--	150 A	3			0	--			3	--	--	PREPARED SPACE	16
17									0	--					18
19					19788	0									20
21	PANEL MP		400 A	3			18068	0			3	30 A	--	SPD DEVICE	22
23									13929	0					24
				TOTAL LOAD:	77.1 kVA		75.7 kVA		76.2 kVA						
				TOTAL AMPS:	643 A		630 A		636 A						

PANEL LOAD SUMMARY

LOAD CLASSIFICATION	CONNECTED LOAD	DEMAND FACTOR	EST. DEMAND	PANEL TOTALS	
Equipment	19816 VA	100.00%	19816 VA		
HVAC	66290 VA	100.00%	66290 VA	TOTAL CONN. LOAD:	228761 VA
Lighting	4190 VA	100.00%	4190 VA	TOTAL EST. DEMAND:	196448 VA
Motor	16174 VA	104.64%	16924 VA	TOTAL CONN. AMPS.:	635 A
Receptacle	27440 VA	68.22%	18720 VA	TOTAL EST. DEMAND AMPS:	545 A
Elec. Heating	25300 VA	100.00%	25300 VA		
Kitchen Equipment - Non-Dwelling Unit	69551 VA	65.00%	45208 VA		

BRK NOTES:
A = ARC-FAULT BREAKER | GP = GFEPD BREAKER | LCP = CRKT TO BE ROUTED THROUGH LTG CONTROL PANEL
S = SHUNT-TRIP BREAKER | G = GFCI BREAKER | R = RED HANDLED, LOCK-OUT TYPE

PANEL: LA

PAYNE ENGINEERING

LOCATION: | **VOLTAGE:** 120/208 Wye | **SCCR:** 22k
FED FROM: LDPA | **PHASES:** 3 | **TYPE:** MLO
MOUNTING: SURFACE | **WIRES:** 4 | **BUS AMPS:** 225 A
ENCLOSURE: NEMA 1 | **BUSSING:** SEE SPEC'S | **MBR AMPS:** N/A
MFG & MODEL: ABB/PANELBOARD | **DIMENSIONS:** 20"W x 5.8"D x **"H | **FEED:** BOTTOM

PROJECT: TWIN FALLS COUNTY - WRIGHT AVE JAIL

NOTES:
PROVIDE WITH INTERNAL SURGE PROTECTION DEVICE

CKT	CIRCUIT DESCRIPTION	NOTE	AMPS	P	A		B		C		P	AMPS	NOTE	CIRCUIT DESCRIPTION	CKT
1	Receptacle		20 A	1	1260	900					1	20 A		Receptacle	2
3	Receptacle		20 A	1			1080	900			1	20 A		Receptacle	4
5	Receptacle		20 A	1					900	0	1	20 A	--	SPARE	6
7	Receptacle		20 A	1	1248	720					1	20 A		Receptacle	8
9	Receptacle		20 A	1			360	720			1	20 A		Receptacle	10
11	Receptacle		20 A	1					1400	1080	1	20 A		Receptacle	12
13	Receptacle		20 A	1	900	1000					1	20 A	GP	Roof Heat-Trace	14
15	Receptacle		20 A	1			1080	500			1	20 A	GP	Roof Heat-Trace	16
17	Receptacle		20 A	1					900	1000	1	20 A	GP	Roof Heat-Trace	18
19	Receptacle - Rooftop		20 A	1	540	377					1	20 A		Gas Water Htr	20
21	Receptacle - Rooftop		20 A	1			540	250			1	20 A		Gas Water Htr	22
23	Relay Panel - RP(A)		20 A	1					100	1000	2	20 A		Elec. Heating	24
25	Pole Cameras		20 A	1	240	1000									26
27	Lighting		20 A	1			627	1000			2	20 A		Elec. Heating	28
29	Elec. RM EF		20 A	1					528	1000					30
31	SPARE	--	20 A	1	0	1500					2	20 A		West Gate	32
33	SPARE	--	20 A	1			0	1500							34
35	SPARE	--	20 A	1					0	3000	2	60 A		Genset#1 Accessories	36
37	SPARE	--	20 A	1	0	3000									38
39	SPARE	--	20 A	1			0	3000			2	60 A		Genset#2 Accessories	40
41	SPARE	--	20 A	1					0	3000					42
43	SPARE	--	20 A	1	0	0					1	20 A	--	SPARE	44
45	SPARE	--	20 A	1			0	0			1	20 A	--	SPARE	46
47	SPARE	--	20 A	1					0	0	1	20 A	--	SPARE	48
49	SPARE	--	20 A	1	0	0									50
51	SPARE	--	20 A	1			0	0			3	30 A	--	SPD DEVICE	52
53	SPARE	--	20 A	1					0	0					54
				TOTAL LOAD:	12.7 kVA		11.6 kVA		13.9 kVA						
				TOTAL AMPS:	107 A		96 A		117 A						
				TOTAL ESTIMATED DEMAND AMPS:			101 A								

BRK NOTES:
A = ARC-FAULT BREAKER | GP = GFEPD BREAKER | LCP = CRKT TO BE ROUTED THROUGH LTG CONTROL PANEL
S = SHUNT-TRIP BREAKER | G = GFCI BREAKER | N = NEW CIRCUIT BREAKER, SIZE/TYPE AS INDICATED

PROFESSIONAL ENGINEER REGISTERED 13053 02/14/25 STATE OF IDAHO SHAWN A. MEADOR

PROJECT #: 2496

PAYNE Engineering Inc. Consulting Engineers
1823 E. Center
Pocatello, Idaho 83201
tel (208) 232-4439
www.paynengineeringinc.com

DATE 02/14/2025 | REVISION ISSUED FOR PERMIT

PHASE 1 PART B FOR:
TWIN FALLS COUNTY - WRIGHT AVE JAIL
2515 Wright Ave, Twin Falls, ID 83301
ELECTRICAL SCHEDULES

Laughlin Ricks Architecture
architecture/planning
134 3RD AVE. E. * Twin Falls, Idaho 83301
PHONE: (208) 736-8050

DATE: 02/14/25
SAM Drawn | TEP Checked
#23029 PROJECT #

E1B-6.1

PANEL: LB

PAYNE ENGINEERING

LOCATION:
FED FROM: TB
MOUNTING: SURFACE
ENCLOSURE: NEMA 1
MFG & MODEL: ABB/ReliaGear neXT
VOLTAGE: 120/208 Wye
PHASES: 3
WIRES: 4
BUSSING: SEE SPEC'S
DIMENSIONS: 20"W x 5.8"D x **"H
SCCR: 10k
TYPE: MBR
BUS AMPS: 225 A
MBR AMPS: 110 A
FEED: TOP
PROJECT: TWIN FALLS COUNTY - WRIGHT AVE JAIL

NOTES:
PROVIDE WITH INTERNAL SURGE PROTECTION DEVICE

CKT	CIRCUIT DESCRIPTION	NOTE	AMPS	P	A		B		C		P	AMPS	NOTE	CIRCUIT DESCRIPTION	CKT
1	Receptacle		20 A	1	1140	1080					1	20 A		Receptacle	2
3	Receptacle		20 A	1			370	960			1	20 A		Receptacle	4
5	Receptacle		20 A	1					1080	720	1	20 A		Receptacle	6
7	Overhead Door		20 A	1	500	1120					1	20 A		Receptacle	8
9	Dayroom TV's		20 A	1			900	1120			1	20 A		Receptacle	10
11	Receptacle		20 A	1					1120	1120	1	20 A		Receptacle	12
13	Receptacle - Rooftop		20 A	1	900	250					1	20 A		Gas Water Htr	14
15	Roof Heat-Trace	GP	20 A	1			800	450			1	20 A		Gas Water Htr	16
17	Roof Heat-Trace	GP	20 A	1					400	100	1	20 A		Relay Panel RP(B)	18
19	NAC & Fire Bell	R	20 A	1	600	1056					1	20 A		Dayroom Shower EF's	20
21	SPARE	--	20 A	1			0	528			1	20 A		Dayroom Toilet EF	22
23	SPARE	--	20 A	1					0	0	1	20 A	--	SPARE	24
25	SPARE	--	20 A	1	0	0					1	20 A	--	SPARE	26
27	SPARE	--	20 A	1			0	0			1	20 A	--	SPARE	28
29	SPARE	--	20 A	1					0	0	1	20 A	--	SPARE	30
31	SPARE	--	20 A	1	0	0					1	20 A	--	SPARE	32
33	SPARE	--	20 A	1			0	1000			2	20 A		Elec. Heating	34
35	SPARE	--	20 A	1					0	1000					36
37	SPARE	--	20 A	1	0	0									38
39	SPARE	--	20 A	1			0	0			3	30 A	--	SPD DEVICE	40
41	SPARE	--	20 A	1					0	0					42
					TOTAL LOAD:		6.6 kVA		5.5 kVA						
					TOTAL AMPS:		56 A		52 A		46 A				
					TOTAL ESTIMATED DEMAND AMPS:				48 A						

BRK NOTES:
A = ARC-FAULT BREAKER
S = SHUNT-TRIP BREAKER
GP = GFEPD BREAKER
G = GFCI BREAKER
LCP = CRKT TO BE ROUTED THROUGH LTG CONTROL PANEL
R = RED HANDLE BREAKER W/ LOCKING DEVICE

PANEL: EHA

PAYNE ENGINEERING

LOCATION:
FED FROM: MSB
MOUNTING: SURFACE
ENCLOSURE: NEMA 1
MFG & MODEL: SQ. D/NF SERIES
VOLTAGE: 480/277 Wye
PHASES: 3
WIRES: 4
BUSSING: SEE SPEC'S
DIMENSIONS: 20"W x 5.8"D x **"H
SCCR: 35k
TYPE: MLO
BUS AMPS: 400 A
MBR AMPS: N/A
FEED: BOTTOM
PROJECT: TWIN FALLS COUNTY - WRIGHT AVE JAIL

NOTES:
PROVIDE WITH INTEGRAL SURGE PROTECTION DEVICE

CKT	CIRCUIT DESCRIPTION	NOTE	AMPS	P	A		B		C		P	AMPS	NOTE	CIRCUIT DESCRIPTION	CKT
1	Lighting		20 A	1	1725	0					1	20 A	--	SPARE	2
3	Lighting		20 A	1			1433	0			1	20 A	--	SPARE	4
5	SPARE	--	20 A	1					0	0	1	20 A	--	SPARE	6
7	SPARE	--	20 A	1	0	0					1	20 A	--	SPARE	8
9	SPARE	--	20 A	1			0	0			1	20 A	--	SPARE	10
11	SPARE	--	20 A	1					0	0	1	20 A	--	SPARE	12
13					0	0									14
15	SPARE	--	60 A	3			0	0			3	60 A		PANEL EHD (FUTURE PHASE)	16
17									0	0					18
19					3110	19233									20
21	PANEL EHB		60 A	3			2400	25045			3	150 A		XFMR ETA	22
23									700	22860					24
25					0	0									26
27	PANEL EHC (FUTURE PHASE)		60 A	3			0	0			3	30 A	--	SPD DEVICE	28
29									0	0					30
					TOTAL LOAD:		24.0 kVA		28.9 kVA		23.5 kVA				
					TOTAL AMPS:		87 A		105 A		85 A				
					TOTAL ESTIMATED DEMAND AMPS:				84 A						

BRK NOTES:
A = ARC-FAULT BREAKER
S = SHUNT-TRIP BREAKER
GP = GFEPD BREAKER
G = GFCI BREAKER
LCP = CRKT TO BE ROUTED THROUGH LTG CONTROL PANEL
R = RED HANDLE BREAKER W/ LOCKING DEVICE

PANEL: EHB

PAYNE ENGINEERING

LOCATION:
FED FROM: EHA
MOUNTING: SURFACE
ENCLOSURE: NEMA 1
MFG & MODEL: SQ. D/NF SERIES
VOLTAGE: 480/277 Wye
PHASES: 3
WIRES: 4
BUSSING: SEE SPEC'S
DIMENSIONS: 20"W x 5.8"D x **"H
SCCR: 14k
TYPE: MLO
BUS AMPS: 100 A
MBR AMPS: N/A
FEED: BOTTOM
PROJECT: TWIN FALLS COUNTY - WRIGHT AVE JAIL

NOTES:
PROVIDE WITH INTERNAL SURGE PROTECTION DEVICE

CKT	CIRCUIT DESCRIPTION	NOTE	AMPS	P	A		B		C		P	AMPS	NOTE	CIRCUIT DESCRIPTION	CKT
1	Lighting - Dayroom 117 Walkways		20 A	1	1500	1650					1	20 A		Ltg - Dayroom 135/Rec 136 NL	2
3	Lighting - Dayroom 117 Cells		20 A	1			2400	0			1	20 A	--	SPARE	4
5	Lighting - Dayroom 117 NL		20 A	1					700	0	1	20 A	--	SPARE	6
7	SPARE	--	20 A	1	0	0					1	20 A	--	SPARE	8
9	SPARE	--	20 A	1			0	0			1	20 A	--	SPARE	10
11	SPARE	--	20 A	1					0	0	1	20 A	--	SPARE	12
13	PREPARED SPACE	--	--	1	--	--					1	--	--	PREPARED SPACE	14
15	PREPARED SPACE	--	--	1			--	--			1	--	--	PREPARED SPACE	16
17	PREPARED SPACE	--	--	1					--	--	1	--	--	PREPARED SPACE	18
19	PREPARED SPACE	--	--	1	--	--					1	--	--	PREPARED SPACE	20
21	PREPARED SPACE	--	--	1			--	--			1	--	--	PREPARED SPACE	22
23	PREPARED SPACE	--	--	1					--	--	1	--	--	PREPARED SPACE	24
25	PREPARED SPACE	--	--	1	--	0									26
27	PREPARED SPACE	--	--	1			--	0			3	30 A	--	SPD DEVICE	28
29	PREPARED SPACE	--	--	1					--	0					30
					TOTAL LOAD:		3.1 kVA		2.4 kVA		0.7 kVA				
					TOTAL AMPS:		12 A		10 A		3 A				
					TOTAL ESTIMATED DEMAND AMPS:				7 A						

BRK NOTES:
A = ARC-FAULT BREAKER
S = SHUNT-TRIP BREAKER
GP = GFEPD BREAKER
G = GFCI BREAKER
LCP = CRKT TO BE ROUTED THROUGH LTG CONTROL PANEL
N = NEW CIRCUIT BREAKER, SIZE/TYPE AS INDICATED

PANEL: ELA

PAYNE ENGINEERING

LOCATION:
FED FROM: ETA
MOUNTING: SURFACE
ENCLOSURE: NEMA 1
MFG & MODEL: ABB/ReliaGear neXT
VOLTAGE: 120/208 Wye
PHASES: 3
WIRES: 4
BUSSING: SEE SPEC'S
DIMENSIONS: 20"W x 5.8"D x **"H
SCCR: 10k
TYPE: MBR
BUS AMPS: 400 A
MBR AMPS: 400 A
FEED: TOP
PROJECT: TWIN FALLS COUNTY - WRIGHT AVE JAIL

NOTES:
PROVIDE WITH INTERNAL SURGE PROTECTION DEVICE

CKT	CIRCUIT DESCRIPTION	NOTE	AMPS	P	A		B		C		P	AMPS	NOTE	CIRCUIT DESCRIPTION	CKT
1	Dayroom 117 Smoke EF	LCP	20 A	1	1176	0					1	20 A	--	SPARE	2
3	Dorm 135 Smoke EF	LCP	20 A	1			1176	0			1	20 A	--	SPARE	4
5	Dorm 135 Smoke EF	LCP	20 A	1					1176	0	1	20 A	--	SPARE	6
7	Indoor Rec 136 Smoke EF	LCP	20 A	1	1176	0					1	20 A	--	SPARE	8
9	SPARE	--	20 A	1			0	0			1	20 A	--	SPARE	10
11	SPARE	--	20 A	1					0	0	1	20 A	--	SPARE	12
13	PREPARED SPACE	--	--	1	--	0									14
15	PREPARED SPACE	--	--	1			--	0			3	100 A	--	SPARE	16
17	PREPARED SPACE	--	--	1					--	0					18
19					8130	--					1	--	--	PREPARED SPACE	20
21	PANEL ECR		125 A	3			11480	--			1	--	--	PREPARED SPACE	22
23									9260	--	1	--	--	PREPARED SPACE	24
25					8751	0									26
27	PANEL EA		150 A	3			12389	0			3	30 A	--	SPD DEVICE	28
29									12424	0					30
					TOTAL LOAD:		19.2 kVA		25.0 kVA		22.9 kVA				
					TOTAL AMPS:		160 A		213 A		195 A				
					TOTAL ESTIMATED DEMAND AMPS:				168 A						

BRK NOTES:
A = ARC-FAULT BREAKER
S = SHUNT-TRIP BREAKER
GP = GFEPD BREAKER
G = GFCI BREAKER
LCP = CRKT TO BE ROUTED THROUGH LTG CONTROL PANEL
R = RED HANDLE BREAKER W/ LOCKING DEVICE

PANEL: ECR

PAYNE ENGINEERING

LOCATION:
FED FROM: ELA
MOUNTING: SURFACE
ENCLOSURE: NEMA 1
MFG & MODEL: ABB/PANELBOARD
VOLTAGE: 120/208 Wye
PHASES: 3
WIRES: 4
BUSSING: SEE SPEC'S
DIMENSIONS: 20"W x 5.8"D x **"H
SCCR: 10k
TYPE: MLO
BUS AMPS: 225 A
MBR AMPS: N/A
FEED: BOTTOM
PROJECT: TWIN FALLS COUNTY - WRIGHT AVE JAIL

NOTES:
PROVIDE WITH INTEGRAL SURGE PROTECTION DEVICE

CKT	CIRCUIT DESCRIPTION	NOTE	AMPS	P	A		B		C		P	AMPS	NOTE	CIRCUIT DESCRIPTION	CKT
1	Lighting		20 A	1	560	900					1	20 A		Receptacle	2
3	Lighting		20 A	1			460	900			1	20 A		Receptacle	4
5	SPARE	--	20 A	1					0	900	1	20 A		Receptacle	6
7	SPARE	--	20 A	1	0	900					1	20 A		Receptacle	8
9	SPARE	--	20 A	1			0	900			1	20 A		Receptacle	10
11	SPARE	--	20 A	1					0	720	1	20 A		Receptacle	12
13	Receptacle		20 A	1	720	900					1	20 A		Receptacle	14
15	Receptacle		20 A	1			540	2400			1	30 A		Receptacle - Racks	16
17	Receptacle		20 A	1					360	2400	1	30 A		Receptacle - Racks	18
19	Fire Alarm	R	20 A	1	750	2400					1	30 A		Receptacle - Racks	20
21	SPARE	--	20 A	1			0	2400			1	30 A		Receptacle - Racks	22
23	SPARE	--	20 A	1					0	0	1	20 A	--	SPARE	24
25	SPARE	--	20 A	1	0	0					1	20 A	--	SPARE	26
27	SPARE	--	20 A	1			0	0			1	20 A	--	SPARE	28
29	SPARE	--	20 A	1					0	1000	2	20 A		Elec. Heating	30
31	SPARE	--	20 A	1	0	1000									32
33	SPARE	--	20 A	1			0	1800			2	20 A		Water Heater	34
35	SPARE	--	20 A	1					0	1800					36
37	SPARE	--	20 A	1	0	0									38
39	HVAC		30 A	2			2080	0			3	30 A	--	SPD DEVICE	40
41									2080	0					42
					TOTAL LOAD:		8.1 kVA		11.5 kVA		9.3 kVA				
					TOTAL AMPS:		68 A		97 A		79 A				
					TOTAL ESTIMATED DEMAND AMPS:				70 A						

BRK NOTES:
A = ARC-FAULT BREAKER
S = SHUNT-TRIP BREAKER
GP = GFEPD BREAKER
G = GFCI BREAKER
LCP = CRKT TO BE ROUTED THROUGH LTG CONTROL PANEL
R = RED HANDLE BREAKER W/ LOCKING DEVICE

PANEL: LK

PAYNE ENGINEERING

LOCATION:
FED FROM: LDPA
MOUNTING: FLUSH
ENCLOSURE: NEMA 1
MFG & MODEL: ABB/PANELBOARD
VOLTAGE: 120/208 Wye
PHASES: 3
WIRES: 4
BUSSING: SEE SPEC'S
DIMENSIONS: 20"W x 5.8"D x **"H
SCCR: 10k
TYPE: MLO
BUS AMPS: 225 A
MBR AMPS: N/A
FEED: BOTTOM
PROJECT: TWIN FALLS COUNTY - WRIGHT AVE JAIL

NOTES:

CKT	CIRCUIT DESCRIPTION	NOTE	AMPS	P	A		B		C		P	AMPS	NOTE	CIRCUIT DESCRIPTION	CKT
1	Receptacle		20 A	1	640	720					1	20 A		Receptacle	2
3	Receptacle		20 A	1			900	840			1	20 A	G	Receptacle	4
5	Overhead Door		20 A	1					1200	1560	1	20 A	G	Refrigerated Counter	6
7	Microwave	G	20 A	1	1200	1500					1	20 A	G	Heated Cabinet	8
9	Induction Cooktop	G	20 A	1			1200	1500			1	20 A	G	Heated Cabinet	10
11	Convection Oven	G	20 A	1					1440	1200	1	20 A	G	Microwave	12
13	Ice Maker		20 A	1	1440	1020					1	20 A		Receptacle	14
15	Mixer	G	20 A	1			600	780			1	20 A		Receptacle / Unit Heater	16
17	Food Cutter	G	20 A	1					1200	0	1	20 A	--	SPARE	18
19	Air Curtain		20 A	1	720	0					1	20 A	--	SPARE	20
21	Kitchen Hood Control		20 A	1			1200	0			1	20 A	--	SPARE	22
23	Dishwasher Hood EF		20 A	1					720	0	1	20 A	--	SPARE	24
25	SPARE	--	20 A	1	0	0					1	20 A	--	SPARE	26
27	SPARE	--	20 A	1			0	0			1	20 A	--	SPARE	28
29	Hot Food Serving Counter	G	30 A	2					1872	0	1	20 A	--	SPARE	30
31					1872	0					1	20 A	--	SPARE	32
33	Hot Food Serving Counter	G	30 A	2			1872	0			1	20 A	--	SPARE	34
35									1872	0	1	20 A	--	SPARE	36
37	Freezer/Cooler Ltg & Door		20 A	1	720	--					1	--	--	PREPARED SPACE	38
39	Cooler Evap.		20 A	1			780	--			1	--	--	PREPARED SPACE	40
41	Cooler Cond. Unit		15 A	2					1560	--	1	--	--	PREPARED SPACE	42
43					1560	--					1	--	--	PREPARED SPACE	44
45	Freezer Evaporator		30 A	2			208	--			1	--	--	PREPARED SPACE	46
47									208	--	1	--	--	PREPARED SPACE	48
49	Freezer Cond. Unit		50 A	2	2912	--					1	--	--	PREPARED SPACE	50
51							2912	--			1	--	--	PREPARED SPACE	52
53									721	--	1	--	--	PREPARED SPACE	54
55	Mixer		20 A	3	721	1141					3	20 A		Kitchen Hood EF	56
57							721	1141							58
59									721	1141					60
61	Mixer		20 A	3	721	1141					3	20 A		Kitchen Hood EF	62
63							721	1141							64
65	Dishwasher	G	40 A	1					3600	1141					66
67					3603	3242									68
69	Dishwasher Heater		50 A	3			3603	3242			3	60 A		Kitchen Hood Make up Air	70
71									3603	3242					72
					TOTAL LOAD:		24.9 kVA		23.4 kVA		27.0 kVA				
					TOTAL AMPS:		209 A		195 A		227 A				
					TOTAL ESTIMATED DEMAND AMPS:				142 A						

BRK NOTES:
A = ARC-FAULT BREAKER
S = SHUNT-TRIP BREAKER
GP = GFEPD BREAKER
G = GFCI BREAKER
LCP = CRKT TO BE ROUTED THROUGH LTG CONTROL PANEL
N = NEW CIRCUIT BREAKER, SIZE/TYPE AS INDICATED

PANEL: LKH

PAYNE ENGINEERING

LOCATION:
FED FROM: TLKH
MOUNTING: FLUSH
ENCLOSURE: NEMA 1
MFG & MODEL: SQ. D/NQ SERIES
VOLTAGE: 120/208 Wye
PHASES: 3
WIRES: 4
BUSSING: SEE SPEC'S
DIMENSIONS: 20"W x 5.8"D x **"H
SCCR: 10k
TYPE: MLO
BUS AMPS: 400 A
MBR AMPS: N/A
FEED: BOTTOM
PROJECT: TWIN FALLS COUNTY - WRIGHT AVE JAIL

NOTES:
PANEL SHALL BE DE-ENERGIZED WHEN KITCHEN HOOD ANSUL SYSTEM IS ACTIVATED VIA 'SHUNT-TRIP' BREAKER "DS-LKH"

CKT	CIRCUIT DESCRIPTION	NOTE	AMPS	P	A		B		C		P	AMPS	NOTE	CIRCUIT DESCRIPTION	CKT
1	SPARE	--	20 A	1	0	3723									2
3	SPARE	--	20 A	1			0	3723			3	40 A		Convection Oven	4
5	SPARE	--	20 A	1					0	3723					6
7					3723	3723									8
9	Convection Oven		40 A	3			3723	3723			3	40 A		Convection Oven	10
11									3723	3723					12
13					3723	4803									14
15	Convection Oven		40 A	3			3723	4803			3	50 A		Electric Kettle	16
17									3723	4803					18
19					7445	4803									20
21	Combi-Oven		80 A	3			7445	4803			3	50 A		Electric Kettle	22
23									7445	4803					24
25					12369	8008									26
27	Combi-Oven		125 A	3			12369	8008			2	100 A		Electric Braising Pan	28
29									12369	--	1	--	--	PREPARED SPACE	30
					TOTAL LOAD:		52.3 kVA		52.3 kVA		44.3 kVA				
					TOTAL AMPS:		446 A		446 A		369 A				
					TOTAL ESTIMATED DEMAND AMPS:				269 A						

BRK NOTES:
A = ARC-FAULT BREAKER
S = SHUNT-TRIP BREAKER
GP = GFEPD BREAKER
G = GFCI BREAKER
LCP = CRKT TO BE ROUTED THROUGH LTG CONTROL PANEL
N = NEW CIRCUIT BREAKER, SIZE/TYPE AS INDICATED

PROFESSIONAL ENGINEER REGISTERED 13053 02/14/25 STATE OF IDAHO SHAWN A. MEADOR

PROJECT #: 2496

PAYNE Engineering Inc. Consulting Engineers
1823 E. Center
Pocatello, Idaho 83201
tel (208) 232-4439
www.payneengineeringinc.com

DATE	REVISION
02/14/2025	ISSUED FOR PERMIT

PHASE 1 PART B FOR:
TWIN FALLS COUNTY - WRIGHT AVE JAIL
2515 Wright Ave, Twin Falls, Idaho
ELECTRICAL SCHEDULES

Laughlin Ricks Architecture
architecture/planning
134 3RD AVE. E. * Twin Falls, Idaho 83301
PHONE: (208) 736-8050

DATE: 02/14/25
SAM (Drawn) TEP (Checked)
#23029 PROJECT #

E1B-6.2

GROUNDING SYSTEM GENERAL NOTES:

A. WHEN AVAILABLE CONTRACTOR SHALL PROVIDE ALL GROUNDING MEANS INDICATED. CONTRACTOR SHALL REFER TO POWER RISER AND GROUNDING ELECTRODE SCHEDULE (THIS DETAIL) FOR GROUNDING ELECTRODE CONDUCTOR SIZE. CONTRACTOR SHALL REFER TO ELECTRICAL SPECIFICATIONS FOR SPECIFICS OF GROUNDING SYSTEM INSTALLATION AND MATERIALS.

GROUNDING SYSTEM NOTES:

1. BLACKBURN 3900 SERIES OR EQUAL WATER PIPE GROUNDING CLAMP
2. 20'-0" OF BARE GROUNDING ELECTRODE CONDUCTOR EMBEDDED IN CONCRETE FOUNDATION. EXOTHERMICALLY WELDED TO FOUNDATION STEEL AT TWO (2) LOCATIONS OR BONDING TO REBAR SYSTEM WHERE REBAR IS OF ADEQUATE SIZE PER THE NEC.
3. FULL SIZE GROUNDING ELECTRODE CONDUCTOR (REFER TO TABLE).
4. EXOTHERMICALLY WELDED OR UL LISTED/APPROVED CLAMPS (TYPICAL)
5. 5/8" X 10FT COPPER-CLAD DRIVEN GROUND ROD(S), MIN, 10FT APART ON EXTERIOR OF BUILDING.
6. TABLE TAKEN FROM NEC 250.66. UNDERGROUNDED PHASE CONDUCTORS REFERS TO THE SIZE FO THE LARGEST UNGROUNDED SERVICE-ENTRANCE CONDUCTOR OR EQUIVALENT AREA FOR PARALLEL CONDUCTORS. SEE NEC 250.66.

(NOTE #6)
GROUNDING ELECTRODE
CONDUCTOR SIZE TABLE

UNGROUNDED PHASE CONDUCTOR SIZE (COPPER)	GRND ELECTRODE CONDUCTOR SIZE (COPPER)
#2 OR SMALLER	#8
1 OR 1/0	#6
2/0 OR 3/0	#4
OVER 3/0 THRU 350	#2
OVER 350 THRU 600	1/0
OVER 600 THRU 1100	2/0
OVER 1100	3/0

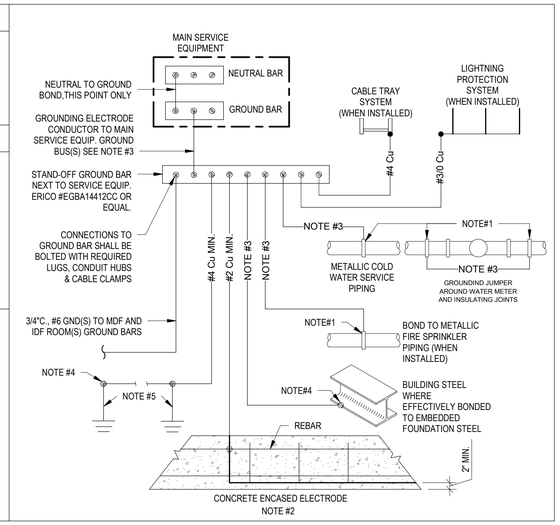

A GROUNDING ELECTRODE SYSTEM DETAIL
SCALE: NONE

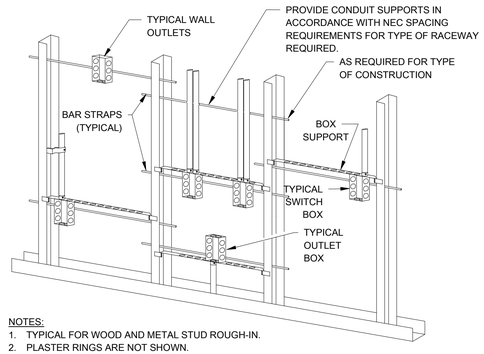

NOTES:
1. TYPICAL FOR WOOD AND METAL STUD ROUGH-IN.
2. PLASTER RINGS ARE NOT SHOWN.
3. LOCATE ALL DEVICE BOXES IN ACCORDANCE WITH CONSTRUCTIONS DRAWINGS, AND WITH ALL APPLICABLE SHOP DRAWINGS.
4. FOR FIRE RATED WALLS; IN ACCORDANCE WITH THE IBC, STEEL ELECTRICAL BOXES THAT DO NOT EXCEED 16SQ. IN. INSTALLED ON OPPOSITE SIDES OF WALLS OR PARTITIONS IN THE SAME STUD SPACE MUST BE SEPERATED BY A MINIMUM OF 24" HORIZONTAL DISTANCE OR THE REQUIRED PUTTY PAD IS INSTALLED ON THE STEEL BOXES.

B TYPICAL ROUGH-IN REQUIREMENTS DETAIL
SCALE: NONE

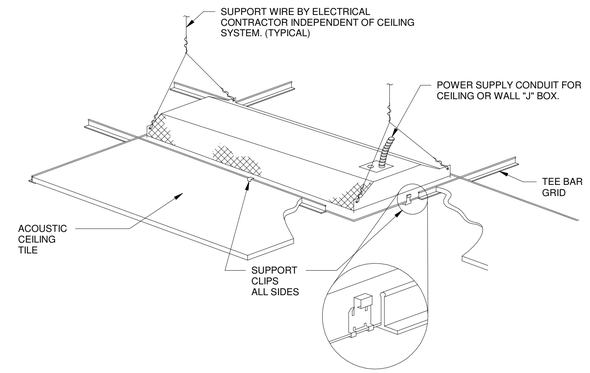

C TYP. LIGHT FIXTURE RECESSED DETAIL
SCALE: NONE

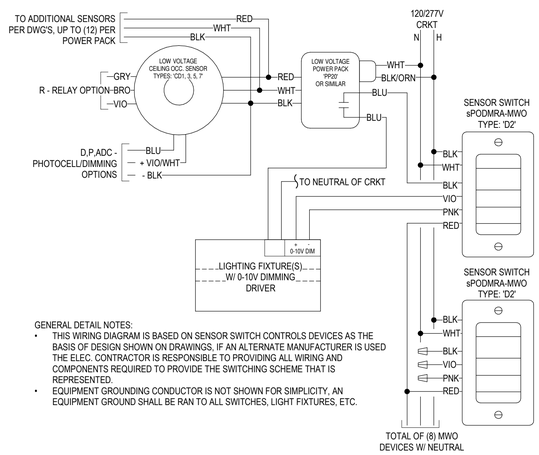

GENERAL DETAIL NOTES:
- THIS WIRING DIAGRAM IS BASED ON SENSOR SWITCH CONTROLS DEVICES AS THE BASIS OF DESIGN SHOWN ON DRAWINGS, IF AN ALTERNATE MANUFACTURER IS USED THE ELEC. CONTRACTOR IS RESPONSIBLE TO PROVIDING ALL WIRING AND COMPONENTS REQUIRED TO PROVIDE THE SWITCHING SCHEME THAT IS REPRESENTED.
- EQUIPMENT GROUNDING CONDUCTOR IS NOT SHOWN FOR SIMPLICITY, AN EQUIPMENT GROUND SHALL BE RAN TO ALL SWITCHES, LIGHT FIXTURES, ETC.

D TYP. LV OCC. SENSOR W/ TYPE 'D2' SWITCH DIAGRAM
SCALE: NONE

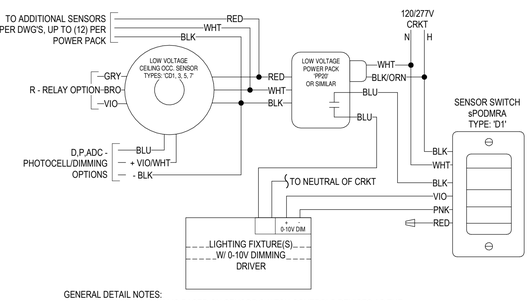

GENERAL DETAIL NOTES:
- THIS WIRING DIAGRAM IS BASED ON SENSOR SWITCH CONTROLS DEVICES AS THE BASIS OF DESIGN SHOWN ON DRAWINGS, IF AN ALTERNATE MANUFACTURER IS USED THE ELEC. CONTRACTOR IS RESPONSIBLE TO PROVIDING ALL WIRING AND COMPONENTS REQUIRED TO PROVIDE THE SWITCHING SCHEME THAT IS REPRESENTED.
- EQUIPMENT GROUNDING CONDUCTOR IS NOT SHOWN FOR SIMPLICITY, AN EQUIPMENT GROUND SHALL BE RAN TO ALL SWITCHES, LIGHT FIXTURES, ETC.

E TYP. LV OCC. SENSOR W/ TYPE 'D1' SWITCH DIAGRAM
SCALE: NONE

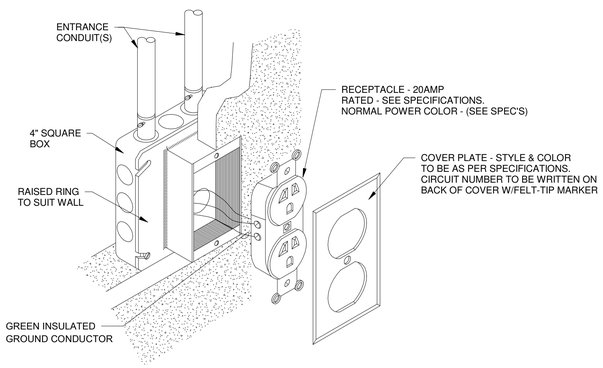

F TYP. RECEPTACLE MOUNTING DETAIL
SCALE: NONE

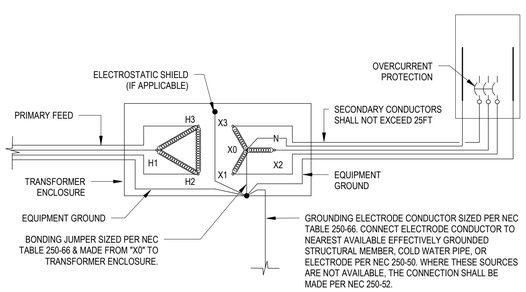

G GROUNDING SEPARATELY DERIVED SYSTEM DETAIL
SCALE: NONE

PROFESSIONAL ENGINEER REGISTERED 13053 02/14/25 STATE OF IDAHO SHAWN A. MEADOR

PROJECT #: 2496

PAYNE Engineering Inc.
Consulting Engineers
1823 E. Center
Pocatello, Idaho 83201
tel (208) 232-4439
www.payneengineeringinc.com

DATE	REVISION
02/14/2025	ISSUED FOR PERMIT

PHASE 1 PART B FOR:
TWIN FALLS COUNTY - WRIGHT AVE JAIL
2515 Wright Ave, Twin Falls, ID 83301
ELECTRICAL DETAILS

Laughlin Ricks Architecture
architecture/planning
134 3RD AVE. E. * Twin Falls, Idaho 83301
PHONE: (208) 736-8050

DATE: 02/14/25
SAM Drawn
TEP Checked
#23029 PROJECT #

E1B-6.3

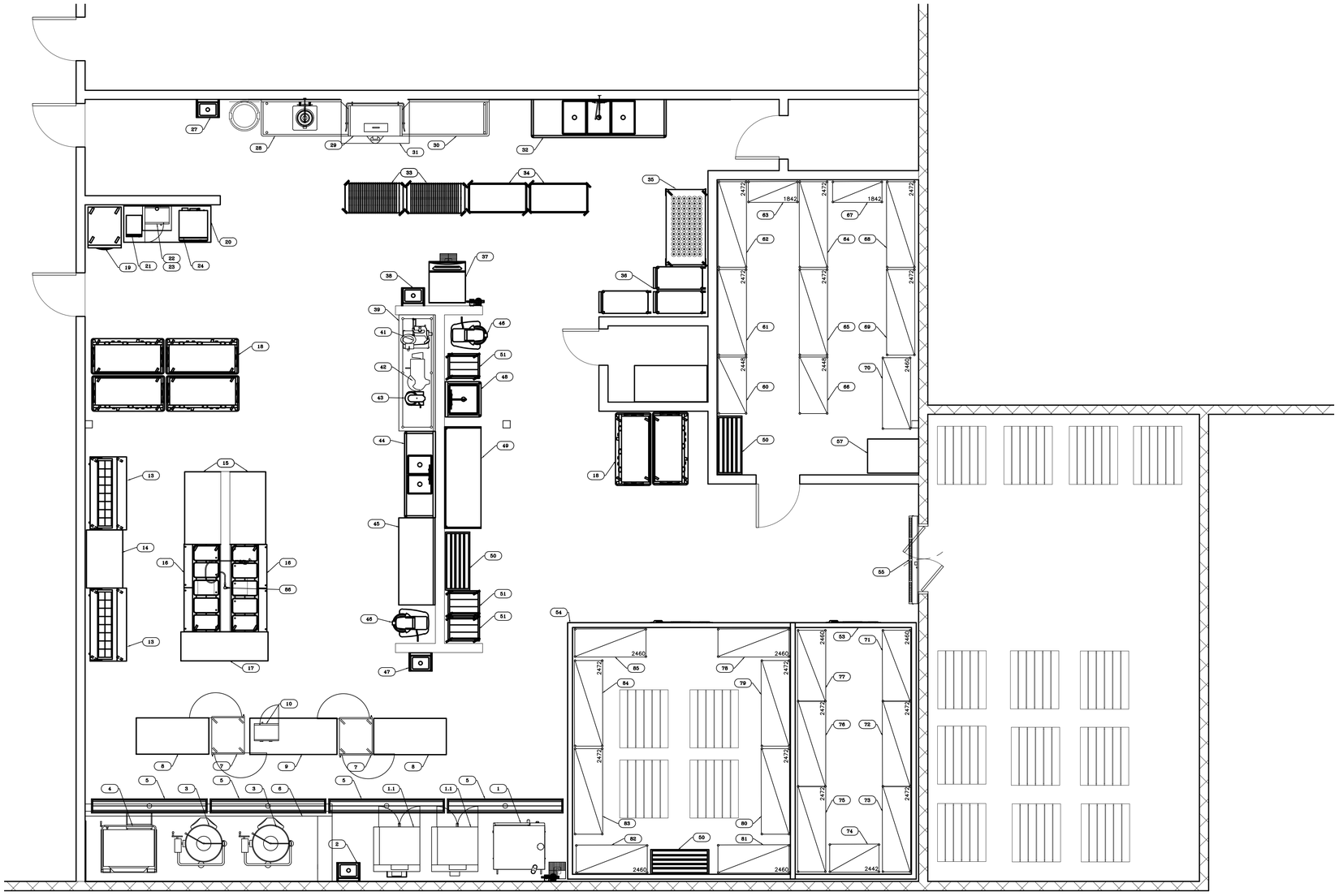

EQUIPMENT LAYOUT

1/4" = 1'-0"

SITE CONDITIONS

CEILING HEIGHT:XXX
VOLTAGE: XXX
PHASE: XX
GAS TYPE: XXX

NOTES

1. CUSTOM FABRICATORS TO VERIFY FIELD CONDITIONS BEFORE ORDERING CUSTOM EQUIPMENT.
2. WALL FINISH MATERIAL TO BE SMOOTH, NON-ABSORBENT, AND EASILY CLEANED
3. EQUIPMENT SUPPLIER IS RESPONSIBLE FOR VERIFYING SIZE AND DIMENSIONS OF ALL FIELD CONDITIONS AS WELL AS EQUIPMENT TO INCLUDE HOODS, WALK-INS. BSR IS NOT RESPONSIBLE FOR EQUIPMENT SPECIFICATIONS IN DESIGN THAT WERE NOT SOLD BY BSR
4. GREASE TRAP SIZING AND PLACEMENT TO BE VERIFIED BY MECHANICAL ENGINEER OR PLUMBING CONTRACTOR
5. METAL STUDS BEHIND HOODS
6. REFERENCE MECHANICAL PLANS FOR DUCT RUNS.
7. SEE ENGINEERED ELECTRICAL DRAWINGS FOR WIRING DIAGRAM

REMOTE REFRIGERATION

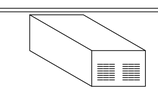

COOLER CONDENSER
ITEM #XX
VERIFY LOCATION: ROOF

FREEZER CONDENSER
ITEM #XX
VERIFY LOCATION: ROOF

EXHAUST

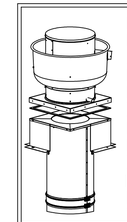

HOOD 1 CLS1 EXHAUST FAN
ITEM #XX
VERIFY LOCATION: ROOF

HOOD 2 CLS1 EXHAUST FAN
ITEM #XX
VERIFY LOCATION: ROOF

HOOD 3 CLS2 EXHAUST FAN
ITEM #XX
VERIFY LOCATION: ROOF

M.U.A.
ITEM XX
VERIFY LOCATION: ROOF

DATA CABLE RAN IN IT'S OWN CONDUIT BY ELECTRICIAN

NOTES

REVISIONS

NO	DATE	REVISION
1	xxx	xxx

bar · store · restaurant

TWIN FALLS, ID 83301
PHONE (208) 733-4221
BOISE, ID 83709
PHONE (208) 345-5793
IDAHO FALLS, ID 83401
PHONE (208) 528-6233

REPRODUCTION OR DISTRIBUTION OF ANY PART OF THIS WORK WITHOUT PERMISSION BY BSR DESIGN & SUPPLIES IS UNLAWFUL AND SUBJECT TO CRIMINAL PROSECUTION
COPYRIGHT 2012 BSR DESIGN & SUPPLIES, ALL RIGHTS RESERVED

PROJECT: TWIN FALLS JAIL

ADDRESS: TWIN FALLS, ID

DATE: 3.27.2025

PHASE:

DRAWN BY: BMU

SHEET NO.: K-1

EQUIPMENT SCHEDULE

					ELECTRICAL					PLUMBING				
ITEM NO	QUANTITY	CATEGORY	MFR	MODEL	VOLTAGE	PHASE	AMPS	CONN TYPE	NEMA	COLD WATER	HOT WATER	I / W	D / W	ITEM NO
1	1	COMBI OVEN, ELECTRIC	RATIONAL	ICP 6-FULL ON 10-FULL E 208/240V 3 PH	208/240	3	62.2/53.9	DIRECT		3/4" GHT		2"		1
	1		RATIONAL	ICP 6-FULL ON 10-FULL E 208/240V 3 PH	208/240	3	103.3/90.0	DIRECT		3/4" GHT		2"		
	1		RATIONAL	8720.1554US						3/4" GHT				
	1		RATIONAL	56.00.562	120	1	1.6	CORD & PLUG	5-15P					
1.1	2	CONVECTION OVEN, ELECTRIC	BLODGETT (MIDDLEBY)	ZEPH-100-E DBL	208	3	31.0	DIRECT						1.1
	4		BLODGETT (MIDDLEBY)		208	3	31.0							
2	1	HAND SINK	JOHN BOOS	PBHS-F-1410-SSLR-X						1/2"	1/2"			2
3	2	KETTLE, ELECTRIC, TILTING	CLEVELAND	KEL60T	208	3	40.9							3
4	1	TILTING SKILLET BRAISING PAN, ELECTRIC	VULCAN	VE40	208	1	77.0	DIRECT						4
	1		VULCAN	SGLTS 12NZL						1/2"				
5	1	FLOOR TROUGH	JOHN BOOS	FTSG-1296									4"	5
6	1	CLASS II HOOD	CAPTIVE-AIRE	32' CLASS II HOOD										6
7	2	PASS-THRU MOBILE HEATED CABINET	VULCAN	VPT13	120	1	12.5	CORD & PLUG	5-15P					7
8	2	WORK TABLE, 60", STAINLESS STEEL TOP	JOHN BOOS	ST6-3060SSK-X										8
9	1	WORK TABLE, 72", STAINLESS STEEL TOP	JOHN BOOS	ST6-3072SSK-X										9
10	1	MICROWAVE OVEN	SHARP	R-21LCFS	120	1	14	CORD & PLUG	5-15P					10
13	2	REFRIGERATED COUNTER, SANDWICH / SALAD TOP SUPER TRAILER	TRUE MFG. - GENERAL FOODSERVICE	TSSU-60-16-HC	115	1	6.5	CORD & PLUG	5-15P					13
14	1	WORK TABLE, 48", STAINLESS STEEL TOP	JOHN BOOS	ST6-3048SSK-X										14
15	2	WORK TABLE, 60", STAINLESS STEEL TOP	JOHN BOOS	ST4-3060SSK										15
16	2	HOT FOOD SERVING COUNTER / TABLE	DUKE	EP305SW	208	1	18	CORD & PLUG	L6-30					16
17	1	WORK TABLE, 72", STAINLESS STEEL TOP	JOHN BOOS	ST6-2472SSK-X										17
18	6	MEAL TRAY DELIVERY CART	CAMBRO	MDC1411T60191										18
19	1	REACH-IN REFRIGERATOR	TRUE MFG. - GENERAL FOODSERVICE	STG1R-1S-HC	115	1	3.8	CORD & PLUG	5-15P					19
20	1	WORK TABLE, 72", STAINLESS STEEL TOP	JOHN BOOS	ST6-3072SSK-X										20
21	1	INDUCTION RANGE, COUNTERTOP	CACCHINA	ELIC-600G		1			5-15P					21
22	1	MICROWAVE OVEN	SHARP	R-21LCFS	120	1	14	CORD & PLUG	5-15P					22
23	1	MICROWAVE OVEN, SHELF	JOHN BOOS	BMS2024-X										23
24	1	CONVECTION OVEN, ELECTRIC	ATOSA USA, INC.	CTCO-25										24
27	1	HAND SINK	JOHN BOOS	PBHS-F-1410-SSLR-X						1/2"	1/2"			27
28	1	SOILED DISHTABLE	JOHN BOOS	JDTS-20-72L-X										28
	1		KROWNE	17-108WL						1/2"	1/2"			
29	1	DISHWASHER, DOOR TYPE	CMA DISHMACHINES	B	115	1	30.0				3/4"	2"		29
	1		CMA DISHMACHINES	TEMP-SURE FI	208-240	3	40				1/2"			
30	1	CLEAN DISHTABLE	JOHN BOOS	JDTC-20-72R-X										30
31	1	CONDENSATE HOOD	CAPTIVE-AIRE	CONDENSATE HOOD										31
32	1	THREE (3) COMPARTMENT SINK	JOHN BOOS	3PB20284-2D24										32
	1		KROWNE	17-108WL						1/2"	1/2"			
	1		KROWNE	21-139L						3/8"				
33	2	DRYING RACK UNIT	METRO	PR48VX4-XDR										33
34	2	DRYING RACK UNIT	METRO	MAX4-PR48VX3										34
35	1	SECURITY UNIT	METRO	MQSEC56E										35
36	3	CART, UTILITY/BUSSING	CACCHINA	BTUC-19GY										36
37	1	ICE MAKER, CUBE-STYLE	MANITOWOC	IYT0450A	115	1	11.9			3/8"		1/2"		37
	1		MANITOWOC	D570								3/4"		
38	1	HAND SINK	JOHN BOOS	PBHS-F-1410-SSLR-X						1/2"	1/2"			38
39	1	WORK TABLE, 96", STAINLESS STEEL TOP	JOHN BOOS	ST6R5-3096SSK-X										39
41	1	FOOD SLICER, ELECTRIC	HOBART	EDGE12-11	120	1	4							41
42	1	ELECTRIC FOOD CUTTER	HOBART	84145-1	115	1		CORD & PLUG						42
43	1	PLANETARY MIXER	GLOBE (MIDDLEBY)	SP10	115	1	5.0	CORD & PLUG	5-15P					43
44	1	TWO (2) COMPARTMENT SINK	JOHN BOOS	2B16204-2D18-X										44
	1		KROWNE	14-812L						1/2"	1/2"			
45	1	WORK TABLE, 72", STAINLESS STEEL TOP	JOHN BOOS	ST6R5-3072SSK-X										45
46	2	PLANETARY MIXER	HOBART	HL400-2STD				DIRECT						46
47	1	HAND SINK	JOHN BOOS	PBHS-F-1410-SSLR-X						1/2"	1/2"			47
48	1	ONE (1) COMPARTMENT SINK	JOHN BOOS	1B244-X										48
	1		KROWNE	14-812L						1/2"	1/2"			
49	1	WORK TABLE, BAKERS TOP	JOHN BOOS	DSB08A										49
50	3	DUNNAGE RACK	CACCHINA	ALDR-2048E										50
51	2	PAN RACK, BUN	WINHOLT	AL-1820B										51
53	1	WALK IN COOLER	IMPERIAL BROWN	WALK IN COOLER										53
54	1	WALK IN COOLER/FREEZER	IMPERIAL BROWN	COMBO COOLER/FREEZER										54
55	1	AIR CURTAIN	BERNER	CLC08-1072A	120	1		DIRECT						55
57	1	CAN DISPENSING RACK STATIONARY	WINHOLT	CR-162										57
60	5	WIRE SHELVING	OLYMPIC	J2448C										60
61	5	WIRE SHELVING	OLYMPIC	J2472C										61
62	5	WIRE SHELVING	OLYMPIC	J2472C										62
63	5	WIRE SHELVING	OLYMPIC	J1842C										63
64	5	WIRE SHELVING	OLYMPIC	J2472C										64
65	5	WIRE SHELVING	OLYMPIC	J2472C										65
66	5	WIRE SHELVING	OLYMPIC	J2448C										66
67	5	WIRE SHELVING	OLYMPIC	J1842C										67
68	5	WIRE SHELVING	OLYMPIC	J2472C										68
69	5	WIRE SHELVING	OLYMPIC	J2472C										69
70	5	WIRE SHELVING	OLYMPIC	J2460C										70
71	4	WIRE SHELVING	OLYMPIC	J2460K										71
72	4	WIRE SHELVING	OLYMPIC	J2472K										72
73	4	WIRE SHELVING	OLYMPIC	J2472K										73
74	4	WIRE SHELVING	OLYMPIC	J2442K										74
75	4	WIRE SHELVING	OLYMPIC	J2472K										75
76	4	WIRE SHELVING	OLYMPIC	J2472K										76
77	4	WIRE SHELVING	OLYMPIC	J2460K										77
78	4	WIRE SHELVING	OLYMPIC	J2460K										78
79	4	WIRE SHELVING	OLYMPIC	J2472K										79
80	4	WIRE SHELVING	OLYMPIC	J2472K										80
81	4	WIRE SHELVING	OLYMPIC	J2460K										81
82	4	WIRE SHELVING	OLYMPIC	J2460K										82
83	4	WIRE SHELVING	OLYMPIC	J2472K										83
84	4	WIRE SHELVING	OLYMPIC	J2472K										84
85	4	WIRE SHELVING	OLYMPIC	J2460K										85
86	1	PRE-RINSE FAUCET ASSEMBLY	KROWNE	19-203L						1/2"	1/2"			86

EQUIPMENT SCHEDULE

NOTES

REVISIONS

NO	DATE	REVISION
1	xxx	xxx
2		
3		
4		
5		
6		

BSR
bar · store · restaurant

TWIN FALLS, ID 83301
PHONE (208) 733-4221
BOISE, ID 83709
PHONE (208) 345-5793
IDAHO FALLS, ID 83401
PHONE (208) 528-6233

REPRODUCTION OR DISTRIBUTION OF ANY PART OF THIS WORK WITHOUT PERMISSION BY BSR DESIGN & SUPPLIES IS UNLAWFUL AND SUBJECT TO CRIMINAL PROSECUTION.
COPYRIGHT 2012 BSR DESIGN & SUPPLIES, ALL RIGHTS RESERVED.

PROJECT: TWIN FALLS JAIL

ADDRESS: TWIN FALLS, ID

DATE: 3.27.2025

PHASE:

DRAWN BY: BMU

SHEET NO.: K-2

SPECIFICATIONS

Indoor freezer/cooler combo
Vinyl NSF gasket (1/16" joint thickness), Cam-lock layout SN1

SPECIAL INSTRUCTIONS
Standard crating

WALL PANELS
Construction: 4" urethane (R-32)
Exterior Finish: Stucco galvalume
Interior Finish: Stucco galvalume
Ceiling connections: Camlock
Floor connections: Camlock / Camlock screed, HD

CEILING PANELS
Construction: 4" high density urethane (R-32)
Exterior Finish: Metal
Interior Finish: Stucco galvalume
Ceiling Caps: Factory mounted
Live Load: 10 psf

FLOOR PANELS
Model: Pallet Jack Floor panels model #PJFN
Manual pallet jacks only, 2000 lb rolling load maximum capacity
Construction: 4" high density urethane (R-32)
w/ .080 smooth aluminum @ interior
over 3/4" plywood
w/ Fiberglass grating @ 24"
w/ Metal @ exterior

DOORS
[A]: 54" x 84" flush model G3 freezer door
*** ELECTRICAL COMPONENTS PRE-WIRED ***
Brand: Imperial Brown
Frame: 4" high density urethane (R-32), 3-sided
w/ Stucco galvalume both sides
w/ 24 ga. stainless steel 430 (magnetic) liners
w/ 4-sided heat cable in frame [FL-4-162W]
(32'-5" x 2.75 ohms/ft (89 total) @ 5 W/ft + Pepi - 120V, 1.4A)
Leaf: 4" thick, 3-side lap, raised 1/4"
w/ Stucco galvalume both sides
w/ Magnetic gasket
w/ 2 1/4" black neoprene sweep
(3) Kason #1277-16 heavy duty hinge
(1) Kason #56XL standard latch, polished chrome
(1) Kason #486AF inside release (recessed)
(1) Weiss 24DT-L, single pole switch and thermometer combo @ ext.
(1) Terminal J-Box @ int.
(1) Kason 1827 heated air vent (6W, 120V, .05A)
(1) 12 ga. stainless steel 304 #2B threshold for interior ramp

[B]: 36" x 78" flush model G3 self-closing cooler door
*** ELECTRICAL COMPONENTS PRE-WIRED ***
*** LEAF WILL NOT BE RAISED UNLESS SPECIFIED OTHERWISE ***
Brand: Imperial Brown
Frame: 4" high density urethane (R-32), 3-sided
w/ Stucco galvalume both sides
w/ 24 ga. stainless steel 430 (magnetic) liners
Leaf: 4" thick, 3-side lap, standard height
w/ Stucco galvalume both sides
w/ Magnetic gasket
w/ 2 1/4" black neoprene sweep
(3) Component Hardware #W59 spring assisted adjustable hinge
(1) Kason #27C cylinder locking deadbolt handle
(1) Kason #27C twist-off knob inside release
(1) Kason 'PUSH' pad
(1) Kason #1094 hydraulic door closer (polished chrome)
(1) Weiss 24DT-L, single pole switch and thermometer combo @ ext.
(1) Terminal J-Box @ int.

PARTS
(5) ea. Kason #1809 vapor proof LED light fixture (29W, 120V, 0.25A)-(LED lamp built-in.)
(1) set 26 ga. stucco galvalume removable ceiling closure-Please Verify Closure Dimensions and Requirements
Estimated Cavity Size = 1' - 6" (18") high x 41' - 8" (500") long
(2) ea. (2" x 4") x 96" x 26 ga. stucco galvalume outside corner vertical closure
(2) ea. (2" x 4") x 48" x 26 ga. stucco galvalume outside corner vertical closure
(7) ea. IB cove base-6" x 96" x 26 ga. stucco galvalume

NSF LABEL
N.S.F. LISTED (STD #7)
N.S.F. GASKET @ ALL PANEL JOINTS

REFRIGERATION
(1) ea. Freezer - Outdoor R448a split system w/ EcoNET
14707 BTU/H @ 10F TD, 17.3 hr runtime @ -10F inside/85F outside room
100F @ cond. unit, 3728ft altitude
(1) Russell R448a air cooled condensing unit #RF0500L4SDB-NT
208-230V/1ø/60Hz/5HP Scroll compressor
MCA=35, MOPD =50, AWEF: 3.15
43.875W x 33D x 35H x 367lbs.
(1) Russell R448a Next-Gen All-Temp evaporator model #RL6E142DDARE
w/ (3) 2-speed EC motors (1.5A) & electric defrost (14.3A)
208-230V/1ø/60Hz
60.125W x 15.5D x 18.125H x 66lbs.

(1) ea. Cooler - Outdoor R448a split system w/ EcoNET
8408 BTU/H @ 11.2F TD, 14.5 hr runtime @ 35F inside/85F outside room
100F @ cond. unit, 3728ft altitude
(1) Russell R448a air cooled condensing unit #RF0100M4SDA-NT
208-230V/1ø/60Hz/1HP Scroll compressor
MCA=15, MOPD =15, AWEF: 7.6
27.875W x 28.25D x 18.75H x 195lbs.
(1) Russell R448a Next-Gen All-Temp evaporator model #RL6A073ADARE
w/ (2) 2-speed EC motors (1.6A) & air defrost
115V/1ø/60Hz
43.625W x 15.5D x 18.125H x 42lbs.

SPECIAL PANELS
xxx w/ (1) ea. 36" deep model #PJFi interior ramp, heated, w/ non-skid strips

NOTES

Meets 2009 Federal Energy Independence and Security Act Requirements.

STANDARD NOTES
To prevent condensation, a minimum 2" from the walk-in exterior surface is required. High humidity conditions may require force ventilation in addition to clearance.

Installation site floor must be true and level within 3/16" per 10' or additional costs may be incurred.

R-Plus Doors sliding and vertical lift doors shall not be considered means of egress. Check code egress requirements for your application.

ELECTRICAL
Field electrician to verify maximum acceptable load for light switches.If load is too high, then relay type controls should be used.
After wiring devices, ALL conduits must be sealed to stop moisture transfer through electrical raceways.
Failure to seal device per NEC codes WILL VOID WARRANTY.

REVISIONS

- PRELIMINARY DRAWING -

Customer Note: This is a preliminary drawing only. Approving this drawing only indicates that you agree with overall dimensions and door and opening locations. Panel sizes and layout is subject to change. If "Nominal Size" has been quoted, then actual dimensions may end up a bit smaller than drawn herein. Actual dimensions will be shown on subsequent non-preliminary drawings. Should discrepencies be found between drawing and sales order, customer may be asked to approve standard Submittal drawings.
The customer or their representative in signing these drawings is taking responsibility for overall size and fit around building walls, columns and ceiling restrictions, door locations, openings for equipment supplied by others, specifications and accessories listed.

☐ APPROVED FOR FABRICATION WITH NO CHANGES
☐ APPROVED FOR FABRICATION WITH CHANGES
☐ REVISE AND RESUBMIT

Signature: _____

24-IB-12953-01
24-IB-12953.00.01-01
NOT FOR CONSTRUCTION
PRELIMINARY

BSR DESIGN & SUPPLIES
TWIN FALLS, ID
TWIN FALLS COUNTY JAIL
TWIN FALLS, ID

IMPERIAL BROWN
198 SE 233rd Ave.
Gresham, OR 97030
Phone: 503-665-5539
Fax: 503-665-2929
www.imperial-brown.com

DO NOT SCALE THIS DRAWING

SCALE:	3/16" = 1'-0"
DATE DRAWN:	1/27/2025
DATE PRINTED:	1/27/2025
BY:	Olivier Beillard
CHK'D BY:	
DRW#:	24-IB-12953-01
BOX:	1 OF 1
SHEET:	1 OF 5

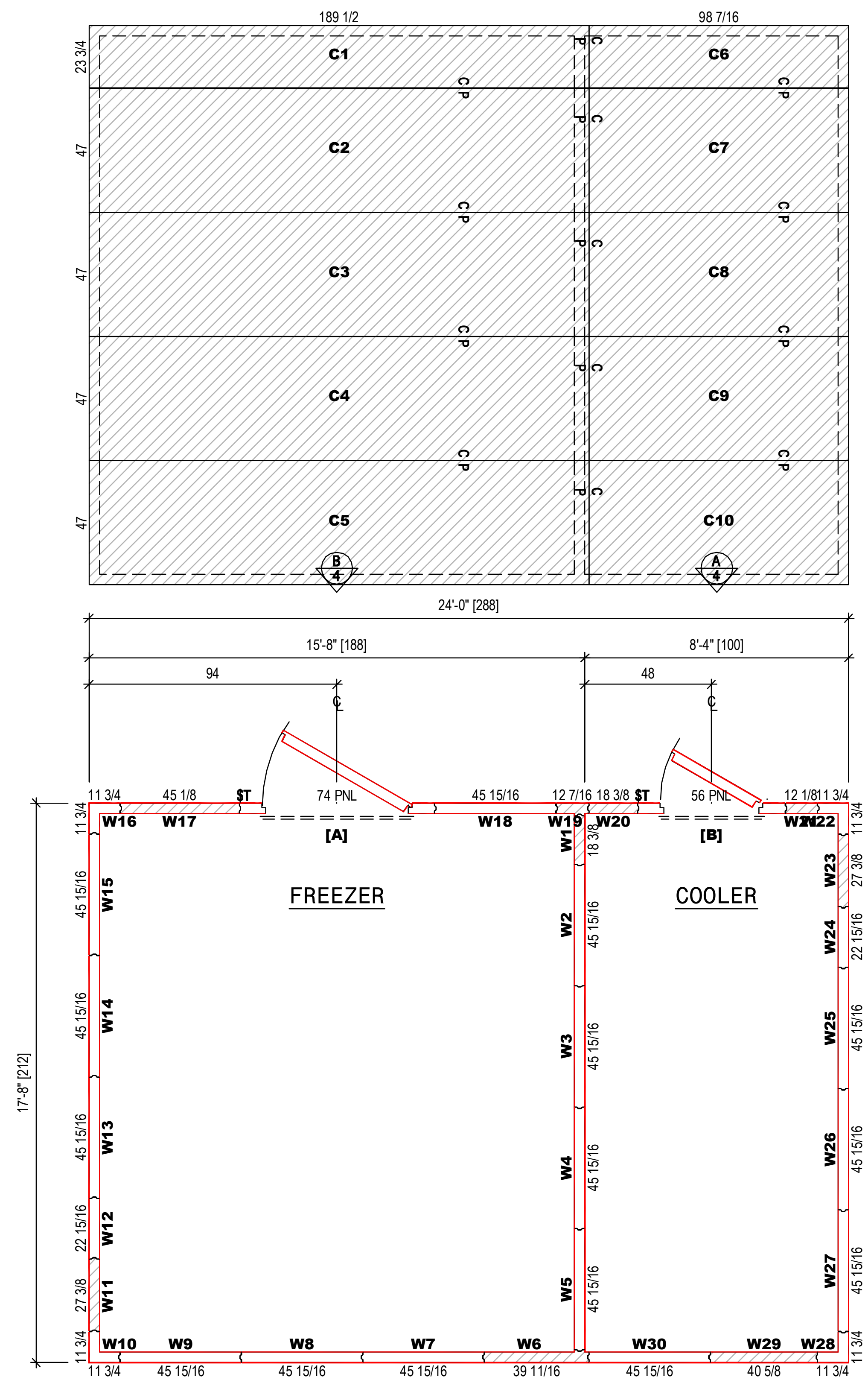

CEILING PANELS

WALL PANELS

Stucco galvalume

CONSTRUCTION LEGEND:
4" urethane (R-32)
4" high density urethane (R-32)

24-IB-12953-01
24-IB-12953.00.01-01
NOT FOR CONSTRUCTION
PRELIMINARY

BSR DESIGN & SUPPLIES
TWIN FALLS, ID
TWIN FALLS COUNTY JAIL
TWIN FALLS, ID

IMPERIAL BROWN
198 SE 233rd Ave.
Gresham, OR 97030
Phone: 503-665-5539
Fax: 503-665-2929
www.imperial-brown.com

DO NOT SCALE THIS DRAWING

SCALE:	3/16" = 1'-0"
DATE DRAWN:	1/27/2025
DATE PRINTED:	1/27/2025
BY:	Olivier Beillard
CHK'D BY:	
DRW#:	24-IB-12953-01
BOX:	1 OF 1
SHEET:	2 OF 5

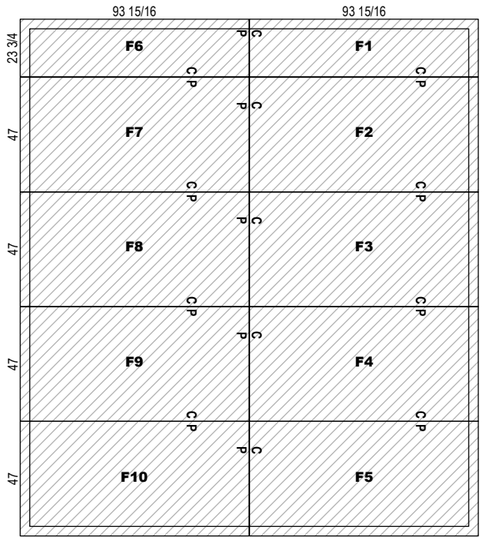

FLOOR PANELS

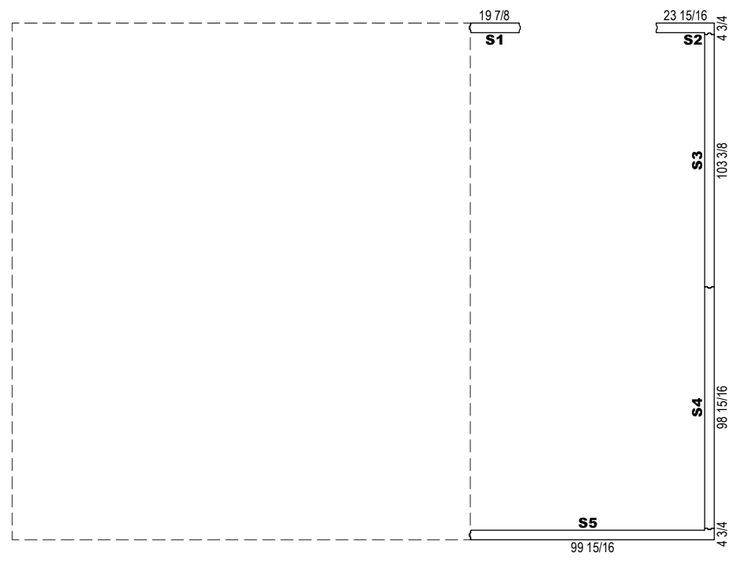

SCREED PANELS

24-IB-12953-01

24-IB-12953.00.01-01

NOT FOR CONSTRUCTION

PRELIMINARY

BSR DESIGN & SUPPLIES
TWIN FALLS, ID

TWIN FALLS COUNTY JAIL
TWIN FALLS, ID

-

IMPERIAL BROWN
198 SE 233rd Ave.
Gresham, OR 97030
Phone: 503-665-5539
Fax: 503-665-2929
www.imperial-brown.com

DO NOT SCALE THIS DRAWING

SCALE:	3/16" = 1'-0"
DATE DRAWN:	1/27/2025
DATE PRINTED:	1/27/2025
BY:	Olivier Beillard
CHK'D BY:	
DRW#:	24-IB-12953-01
BOX:	1 OF 1
SHEET:	3 OF 5

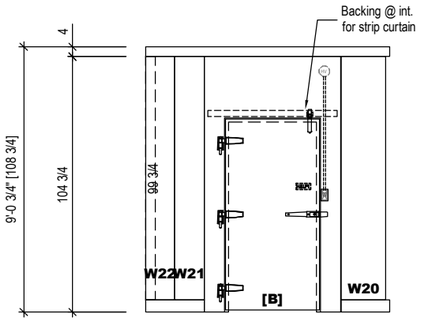

A/4 ELEVATION

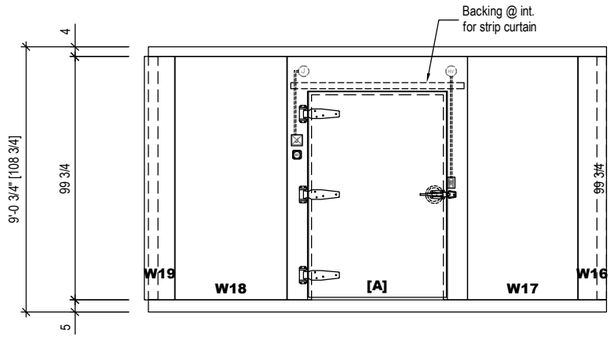

B/4 ELEVATION

24-IB-12953-01

24-IB-12953.00.01-01

NOT FOR CONSTRUCTION

PRELIMINARY

BSR DESIGN & SUPPLIES
TWIN FALLS, ID

TWIN FALLS COUNTY JAIL
TWIN FALLS, ID

-

IMPERIAL BROWN
198 SE 233rd Ave.
Gresham, OR 97030
Phone: 503-665-5539
Fax: 503-665-2929
www.imperial-brown.com

DO NOT SCALE THIS DRAWING

SCALE:	3/16" = 1'-0"
DATE DRAWN:	1/27/2025
DATE PRINTED:	1/27/2025
BY:	Olivier Beillard
CHK'D BY:	
DRW#:	24-IB-12953-01
BOX:	1 OF 1
SHEET:	4 OF 5

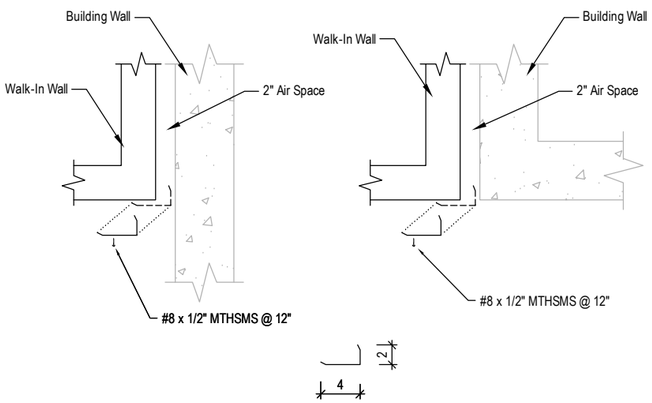

1/5 VERTICAL CLOSURES

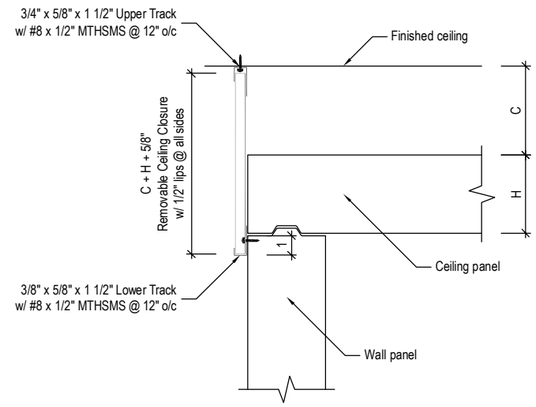

SECTION VIEW

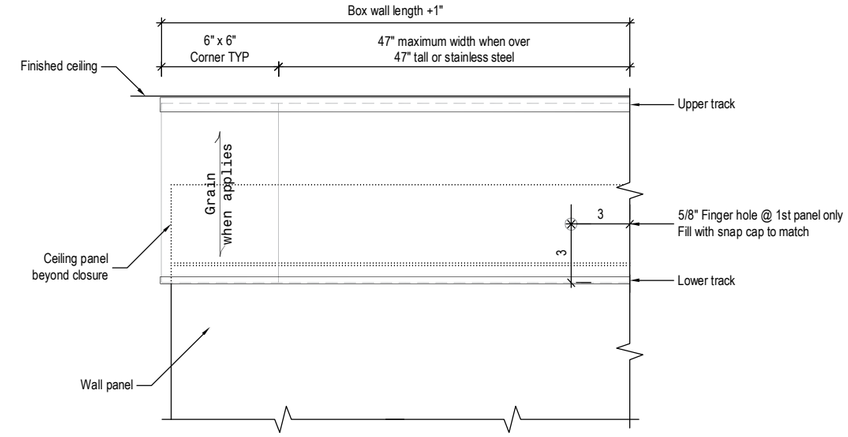

FRONT VIEW

CAUTION: If ceiling height is not provided closures will be back order and shipped later additional freight charges will be charged

2/5 REMOVABLE CEILING CLOSURE

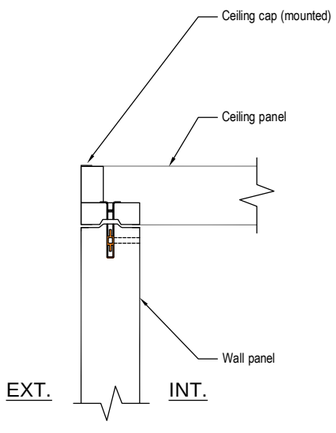

3/5 CEILING CONNECTION

4/5 FLOOR CONNECTION

24-IB-12953-01
24-IB-12953.00.01-01
NOT FOR CONSTRUCTION
PRELIMINARY

BSR DESIGN & SUPPLIES
TWIN FALLS, ID

TWIN FALLS COUNTY JAIL
TWIN FALLS, ID

IMPERIAL BROWN
198 SE 233rd Ave.
Gresham, OR 97030
Phone: 503-665-5539
Fax: 503-665-2929
www.imperial-brown.com

DO NOT SCALE THIS DRAWING

SCALE:	3/16" = 1'-0"
DATE DRAWN:	1/27/2025
DATE PRINTED:	1/27/2025
BY:	Olivier Beillard
CHK'D BY:	
DRW#:	24-IB-12953-01
BOX:	1 OF 1
SHEET:	5 OF 5

FOR QUESTIONS, CALL THE
Montana
REGION 88
PHONE:
EMAIL: reg88@captiveaire.com

PATENT NUMBERS

AC-PSP (UNITED STATES) - US PATENT 7963830 B2.
AC-PSP WALL (CANADA) - CA PATENT 2820509.
AC-PSP ISLAND (CANADA) - CA PATENT 2520330.

HOOD INFORMATION – JOB#7294832

HOOD NO	TAG	MODEL	MANUFACTURER	LENGTH	MAX COOKING TEMP	TYPE	APPLIANCE DUTY	DESIGN CFM/FT	TOTAL EXH CFM	EXHAUST PLENUM RISER(S) WIDTH	LENG	HEIGHT	DIA	CFM	VEL	SP	TOTAL SUPPLY CFM	HOOD CONSTRUCTION	HOOD CONFIG END TO END	ROW
1	Hood-1-1(Left)	6024 ND-2-PSP-F	CAPTIVEAIRE	16' 0"	600 DEG	I	HEAVY	200	3200			4"	12"	1600	2037	-0.785"	2560	430 SS WHERE EXPOSED	LEFT	ALONE
												4"	12"	1600	2037	-0.785"				
2	Hood-1-2(Right)	6024 ND-2-PSP-F	CAPTIVEAIRE	16' 0"	600 DEG	I	HEAVY	200	3200			4"	12"	1600	2037	-0.785"	2560	430 SS WHERE EXPOSED	RIGHT	ALONE
												4"	12"	1600	2037	-0.785"				
3	Dish Hood	4224 VHB-G	CAPTIVEAIRE	8' 0"	700 DEG	II	N/A	175	1400			4"	14"	1400	1310	-0.156"	0	430 SS 100%	ALONE	ALONE

HOOD INFORMATION

HOOD NO	TAG	FILTER(S) TYPE	QTY	HEIGHT	LENGTH	EFFICIENCY @ 7 MICRONS	LIGHT(S) QTY	TYPE	WIRE GUARD	UTILITY CABINET(S) LOCATION	SIZE	FIRE SYSTEM TYPE	FIRE SYSTEM SIZE	ELECTRICAL MODEL #	SWITCHES QUANTITY	FIRE SYSTEM PIPING	HOOD HANGING WEIGHT
1	Hood-1-1(Left)	CAPTRATE SOLO FILTER	12	20"	16"	85% SEE FILTER SPEC	4	RECESSED ROUND	NO	LEFT	12"x60"x24"	TANK FS	4.0/4.0/4.0/4.0			YES	1638 LBS
2	Hood-1-2(Right)	CAPTRATE SOLO FILTER	12	20"	16"	85% SEE FILTER SPEC	4	RECESSED ROUND	NO							YES	1006 LBS
3	Dish Hood						0									NO	310 LBS

HOOD OPTIONS

HOOD NO	TAG	OPTION
1	Hood-1-1(Left)	FIELD WRAPPER 16.00" HIGH FRONT, LEFT.
		BACKSPLASH 120.00" HIGH X 420.00" LONG 430 SS VERTICAL.
		INSULATION FOR TOP OF HOOD.
		STRUCTURAL FRONT PANEL.
		INSULATION FOR BACK OF HOOD.
		LEFT VERTICAL END PANEL 27" TOP WIDTH, 21" BOTTOM WIDTH, 80" HIGH INSULATED 430 SS.
		SENSOR-CV.
		DI-PSP 12" 320CFM [QTY. 4].
2	Hood-1-2(Right)	FIELD WRAPPER 16.00" HIGH FRONT.
		RIGHT END STANDOFF (FINISHED) 1" WIDE 60" LONG INSULATED.
		INSULATION FOR TOP OF HOOD.
		STRUCTURAL FRONT PANEL.
		INSULATION FOR BACK OF HOOD.
		SENSOR-CV.
		RIGHT WALL AS END PANEL.
3	Dish Hood	FIELD WRAPPER 16.00" HIGH FRONT, LEFT, RIGHT.
		INSULATION FOR TOP OF HOOD.

PERFORATED SUPPLY PLENUM(S)

HOOD NO	TAG	POS	LENGTH	WIDTH	HEIGHT	TYPE	RISER(S) WIDTH	LENG	DIA	CFM	SP
1	Hood-1-1(Left)	Front	204"	14"	6"	MUA	8"	36"		640	0.183"
						MUA	8"	36"		640	0.183"
						MUA	8"	36"		640	0.183"
						MUA	8"	36"		640	0.183"
2	Hood-1-2(Right)	Front	193"	14"	6"	MUA	8"	36"		640	0.183"
						MUA	8"	36"		640	0.183"
						MUA	8"	36"		640	0.183"
						MUA	8"	36"		640	0.183"

DIFFUSER SCHEDULE

TAG	MODEL	CEILING HEIGHT	NOMINAL FACE SIZE	RISER DIA	CFM	DUCT VELOCITY (FPM)	FACE DISCHARGE VELOCITY (FPM)	T50 AFF	SP	NOISE CRITERIA	LINKED FAN	LINKED HOOD
	DI-PSP-12-24X24	11'	24 X 24	12	320	408	95	7.81'	0.066"	27		6024ND-2-PSP-F

CLEARANCE TO COMBUSTIBLES

HOODS #	SURFACE	*CLEARANCE
1	TOP	0"
	FRONT	0"
	BACK	0"
	LEFT	0"
	RIGHT	18"
2	TOP	0"
	FRONT	0"
	BACK	0"
	LEFT	18"
	RIGHT	0"

- *0" CLEARANCE TO COMBUSTIBLES CONFORMS TO UL710 STANDARD.
- HOOD MOUNTED UTILITY CABINETS REQUIRE 36" SERVICE CLEARANCE.

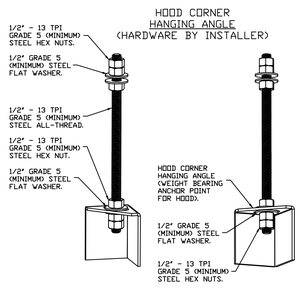

ASSEMBLY INSTRUCTIONS

HANGING ANGLE MUST BE SUPPORTED WITH 1/2" - 13 TPI GRADE 5 (MINIMUM) ALL-THREAD. SANDWICH HANGING ANGLES AND CEILING ANCHOR POINTS WITH 1/2" GRADE 5 (MINIMUM) STEEL FLAT WASHERS AND 1/2" - 13 TPI GRADE 5 (MINIMUM) HEX NUTS AS SHOWN. MUST USE DOUBLED HEX NUT CONFIGURATION BENEATH HOOD HANGING ANGLES AND ABOVE CEILING ANCHORS. MAINTAIN 1/4" OF EXPOSED THREADS BENEATH BOTTOM HEX NUT. TORQUE ALL HEX NUTS TO 57 FT-LBS.

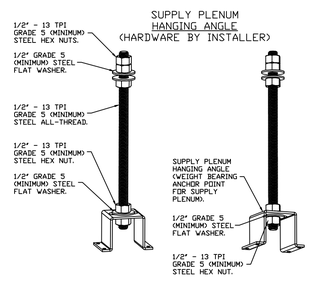

ASSEMBLY INSTRUCTIONS

HANGING ANGLE MUST BE SUPPORTED WITH 1/2" - 13 TPI GRADE 5 (MINIMUM) ALL-THREAD. SANDWICH HANGING ANGLES AND CEILING ANCHOR POINTS WITH 1/2" GRADE 5 (MINIMUM) STEEL FLAT WASHERS AND 1/2" - 13 TPI GRADE 5 (MINIMUM) HEX NUTS AS SHOWN. MUST USE DOUBLED HEX NUT CONFIGURATION ABOVE CEILING ANCHORS. SINGLE HEX NUT BENEATH HANGING ANGLE IS ACCEPTABLE FOR PSP HANGING ANGLES. MAINTAIN 1/4" OF EXPOSED THREADS BENEATH BOTTOM HEX NUT. TORQUE ALL HEX NUTS TO 57 FT-LBS.

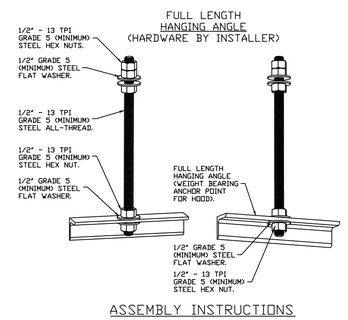

ASSEMBLY INSTRUCTIONS

HANGING ANGLE MUST BE SUPPORTED WITH 1/2" - 13 TPI GRADE 5 (MINIMUM) ALL-THREAD. SANDWICH HANGING ANGLES AND CEILING ANCHOR POINTS WITH 1/2" GRADE 5 (MINIMUM) STEEL FLAT WASHERS AND 1/2" - 13 TPI GRADE 5 (MINIMUM) HEX NUTS AS SHOWN. MUST USE DOUBLED HEX NUT CONFIGURATION ABOVE CEILING ANCHORS. SINGLE HEX NUT BENEATH HANGING ANGLE IS ACCEPTABLE FOR FULL LENGTH HANGING ANGLES. MAINTAIN 1/4" OF EXPOSED THREADS BENEATH BOTTOM HEX NUT. TORQUE ALL HEX NUTS TO 57 FT-LBS.

SPECIFICATION: CAPTRATE• GREASE-STOP• SOLO FILTER

THE CAPTRATE GREASE-STOP SOLO FILTER IS A SINGLE-STAGE FILTER FEATURING A UNIQUE S-BAFFLE DESIGN IN CONJUNCTION WITH A SLOTTED REAR BAFFLE DESIGN, TO DELIVER EXCEPTIONAL FILTRATION EFFICIENCY.

FILTER IS STAINLESS STEEL CONSTRUCTION, AND SIZED TO FIT INTO STANDARD 2-INCH DEEP HOOD CHANNEL(S).

UNITS SHALL INCLUDE STAINLESS STEEL HANDLES AND A FASTENING DEVICE TO SECURE THE TWO COMPONENTS WHEN ASSEMBLED.

GREASE EXTRACTION EFFICIENCY PERFORMANCE SHALL REMOVE AT LEAST 75% OF GREASE PARTICLES FIVE MICRONS IN SIZE, AND 85% GREASE PARTICLES SEVEN MICRONS IN SIZE AND LARGER, WITH A CORRESPONDING PRESSURE DROP NOT TO EXCEED 1.0 INCHES OF WATER GAUGE.

THE CAPTRATE GREASE-STOP SOLO WAS TESTED TO ASTM STANDARD ASTM F2519-05.
MANUFACTURER APPROVED FOR USE IN SOLID FUEL APPLICATIONS AS A SPARK ARRESTER.

EFFICIENCY VS. PARTICLE DIAMETER

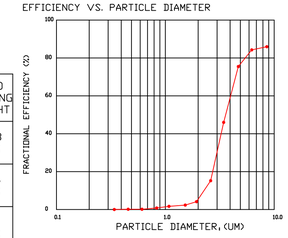

PRESSURE DROP VS. FLOW RATE

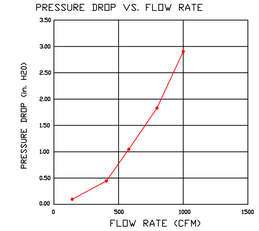

CAPTRATE FILTERS ARE BUILT IN COMPLIANCE WITH:
NFPA #96.
NSF STANDARD #2.
UL STANDARD #1046.
INT. MECH. CODE (IMC).
ULC-S649.

REVISIONS

	DESCRIPTION	DATE:
△		
△		
△		
△		

CAPTIVEAIRE
www.captiveaire.com
Montana
PO Box 1089, 100 Blerney Creek Rd, Unit B/C, Lakeside, MT 59922 PHONE: FAX: 9192275973 EMAIL: reg88@captiveaire.com

Twin Falls Jail
TWIN FALLS, ID, 83301

DATE: 1/23/2025
DWG.#: 7294832
DRAWN BY: NDC-88
SCALE: 3/4" = 1'-0"
MASTER DRAWING
SHEET NO. 1

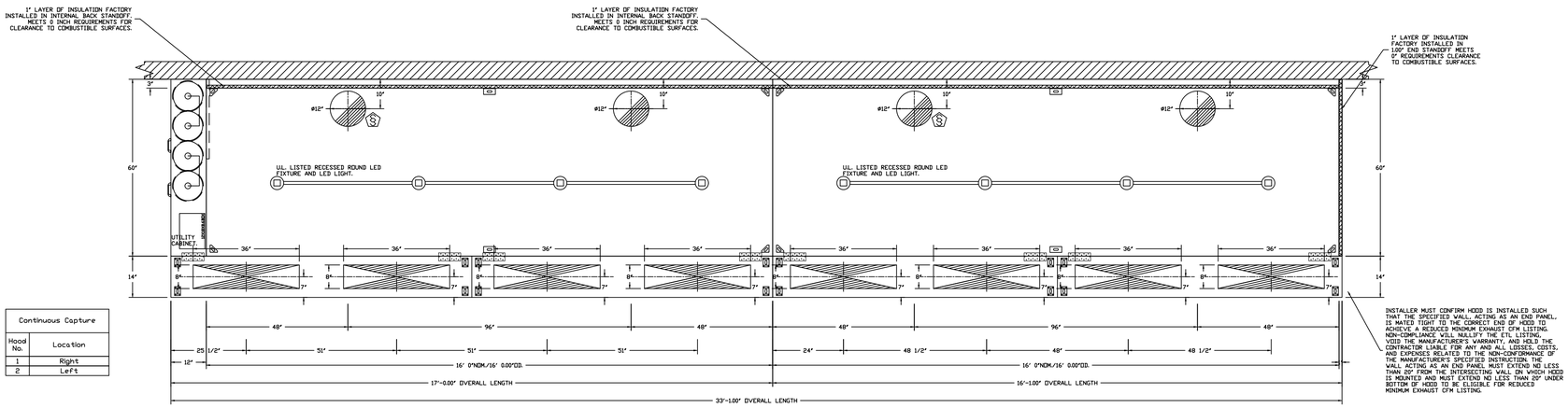

Continuous Capture	
Hood No.	Location
1	Right
2	Left

PLAN VIEW – HOOD #1 (Hood-1-1(Left))
16' 0.00" LONG 6024ND-2-PSP-F
NOTE: ADDITIONAL HANGING ANGLES PROVIDED FOR HOODS 12' AND LONGER.

PLAN VIEW – HOOD #2 (Hood-1-2(Right))
16' 0.00" LONG 6024ND-2-PSP-F
NOTE: ADDITIONAL HANGING ANGLES PROVIDED FOR HOODS 12' AND LONGER.

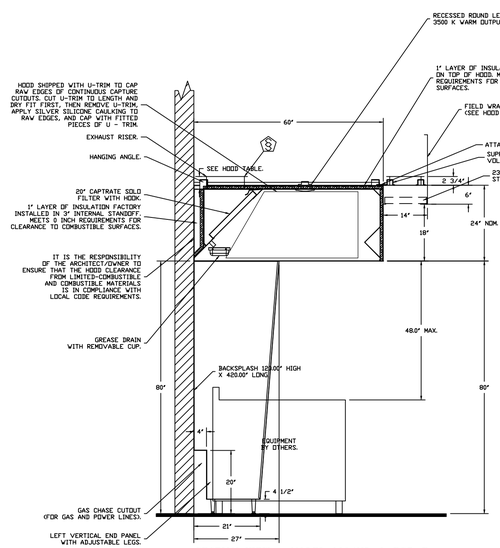

SECTION VIEW – MODEL 6024ND-2-PSP-F
HOOD – #1 (Hood-1-1(Left))

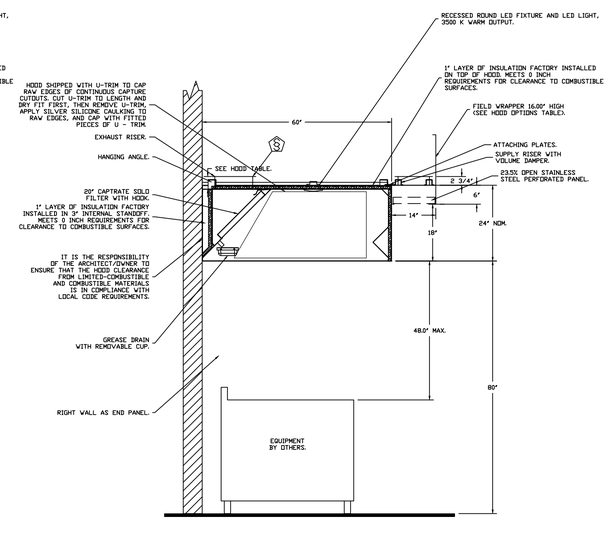

SECTION VIEW – MODEL 6024ND-2-PSP-F
HOOD – #2 (Hood-1-2(Right))

REVISIONS

DESCRIPTION	DATE:

CAPTIVEAIRE
www.captiveaire.com
Montana
PO Box 1089, 100 Blerney Creek Rd, Unit B/C, Lakeside, MT 59922 PHONE: FAX: 9192275973 EMAIL: reg88@captiveaire.com

Twin Falls Jail
TWIN FALLS, ID, 83301

DATE: 1/23/2025

DWG.#: 7294832

DRAWN BY: NDC-88

SCALE: 1/2" = 1'-0"

MASTER DRAWING

SHEET NO. 2

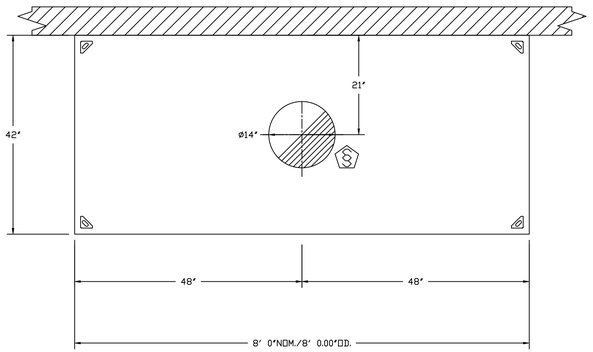

PLAN VIEW – HOOD #3 (Dish Hood)
8' 0.00" LONG 4224VHB-G

QTY 4-DROP-IN PERFORATED SUPPLY PLENUM DIFFUSER (DI-PSP)

FEATURES:
STAINLESS STEEL PERFORATION AND TRIM
REMOVABLE PERFORATION FOR PLENUM CLEANING
DOUBLE PERFORATION FOR EVEN AIR DISTRIBUTION
1/2" THICK INSULATION ON EXTERIOR TOP AND SIDES
APPROX. WEIGHT = 20 lbs

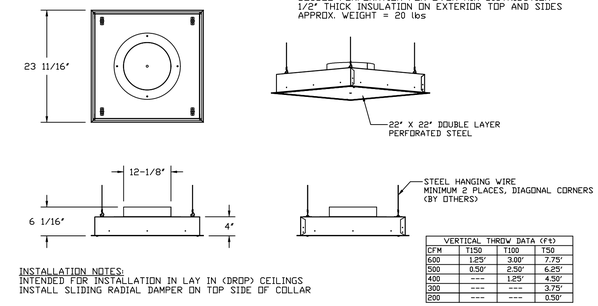

VERTICAL THROW DATA (ft)			
CFM	T150	T100	T50
600	1.25'	3.00'	7.75'
500	0.50'	2.50'	6.25'
400	---	1.25'	4.50'
300	---	---	3.75'
200	---	---	0.50'

INSTALLATION NOTES:
INTENDED FOR INSTALLATION IN LAY IN (DROP) CEILINGS
INSTALL SLIDING RADIAL DAMPER ON TOP SIDE OF COLLAR

DIFFUSER SPECIFICATION

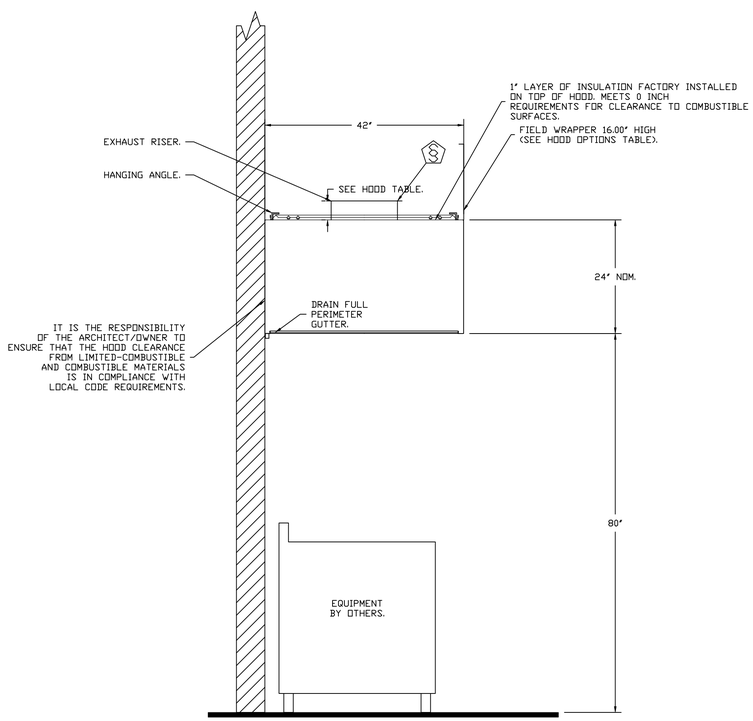

SECTION VIEW – MODEL 4224VHB-C
HOOD – #3 (Dish Hood)

BACKSPLASH

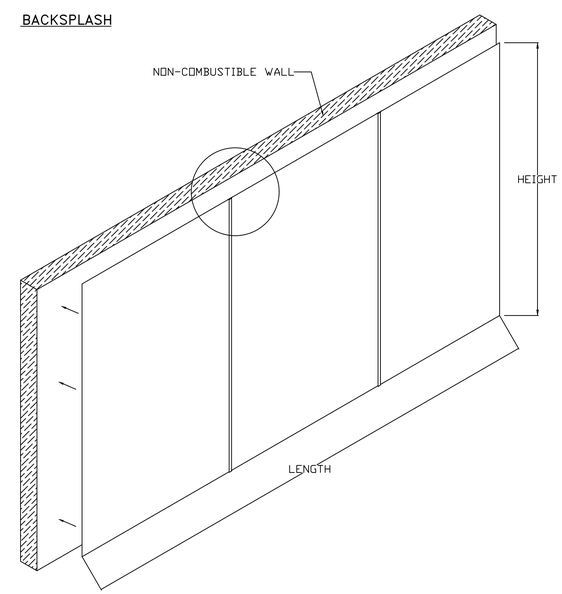

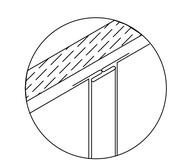

BACKSPLASH PANELS SLIDE INTO DIVIDER BAR

- BACKSPLASH IS NOT INSULATED AND IS UNSUITABLE FOR INSTALL AGAINST COMBUSTIBLE WALLS

REVISIONS

DESCRIPTION	DATE:

CAPTIVEAIRE
www.captiveaire.com
Montana
PO Box 1089, 100 Blerney Creek Rd, Unit B/C, Lakeside, MT 59922 PHONE: FAX: 9192275973 EMAIL: reg88@captiveaire.com

Twin Falls Jail
TWIN FALLS, ID, 83301

DATE: 1/23/2025

DWG.#: 7294832

DRAWN BY: NDC-88

SCALE: 3/4" = 1'-0"

MASTER DRAWING

SHEET NO.
3

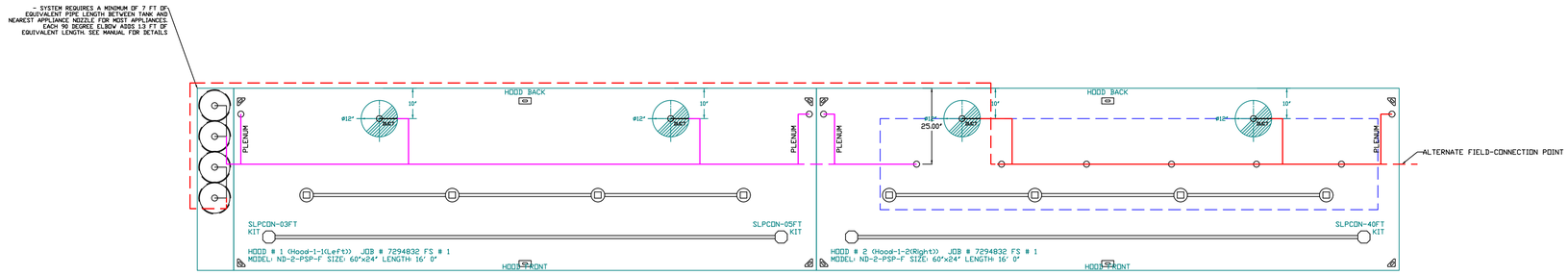

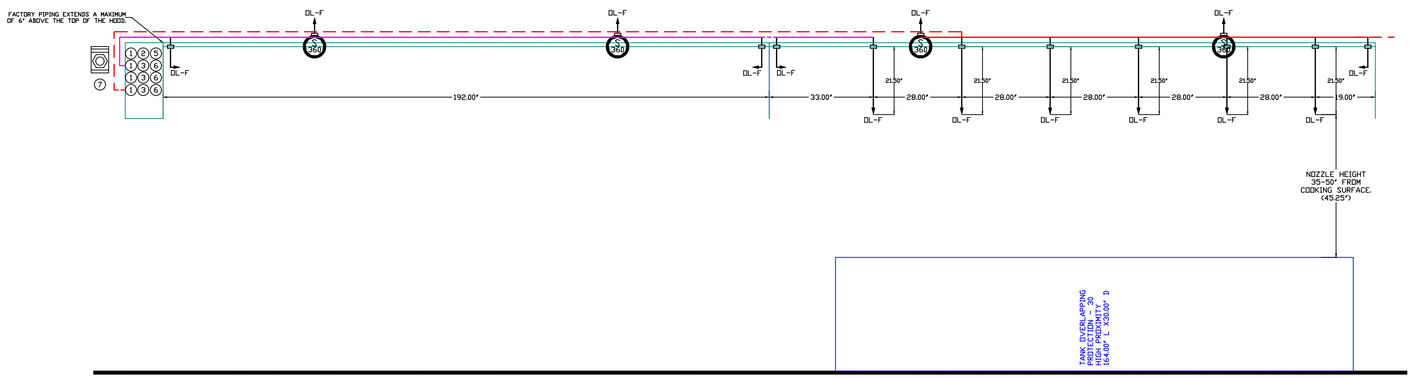

NOTES
- FIELD PIPE DROPS AS SHOWN
  PIPING, ELBOWS, TEES, AND NOZZLES SUPPLIED BY CAS.
- FIELD INSTALLED DROP: FACTORY WILL PROVIDE QTY 2 60IN LONG PIECES OF CHROME PLATED PIPING SHIPPED LOOSE TO BE FIELD-INSTALLED.
- SHIP LOOSE DROP: FACTORY WILL PROVIDE THE EXACT CHROME PIPE LENGTH NEEDED SHIPPED LOOSE TO BE FIELD-INSTALLED.
- RELOCATE NOZZLES IF FLOW PATTERN IS BLOCKED BY SHELVING, SALAMANDERS, ETC.
- OVERLAPPING COVERAGE SHALL NOT BE USED ON ANY APPLIANCE WITH AN OBSTRUCTION.
- IF APPLICABLE, EXTENDED PRE-PIPED DROPS ARE SHIPPED LOOSE.
- FACTORY PIPING EXTENDS A MAXIMUM OF 6" ABOVE THE TOP OF THE HOOD.

- APPLIANCE DIMENSIONS LISTED REPRESENT THE COOKING SURFACE SIZE, NOT THE OVERALL APPLIANCE SIZE.

- THIS FIRE SYSTEM COMPLIES WITH U.L. 300 REQUIREMENTS.

- DL-F NOZZLE PART NUMBER REPLACES 3070-3/8H-10-SS

JOB #: 7294832.
JOB NAME: TWIN FALLS JAIL.

SYSTEM SIZE: TANK-SP-4 DESIGN FP: 62. MAXIMUM FP: 80.
HOOD # 1 16' 0.00" LONG x 60" WIDE x 24" HIGH.
RISER # 1 SIZE: 12" DIA.
RISER # 2 SIZE: 12" DIA.
HOOD # 1 METAL BLOW-OFF CAPS INCLUDED.
HOOD # 2 16' 0.00" LONG x 60" WIDE x 24" HIGH.
RISER # 1 SIZE: 12" DIA.
RISER # 2 SIZE: 12" DIA.
HOOD # 2 METAL BLOW-OFF CAPS INCLUDED.

- HEAVY-DUTY APPLIANCES (RATED 600°F) WILL REQUIRE AN ADDITIONAL DOWNSTREAM FIRESTAT IN THE EVENT THAT THE DUCTWORK CONTAINS ANY HORIZONTAL RUNS OVER 25 FT IN LENGTH.
- MEDIUM TO LIGHT-DUTY APPLIANCES (RATED 450°F) WILL NOT REQUIRE ANY ADDITIONAL DOWNSTREAM DETECTION.

AGENT DISTRIBUTION PIPING LIMITATIONS	
PIPE SECTION	MAX PIPE LENGTH (FT)
MAX SUPPLY LINE TO FIRST OVERLAPPING NOZZLE	42
OVERLAPPING NOZZLE APPLIANCE BRANCH	10
DEDICATED NOZZLE APPLIANCE BRANCH	10

LEGEND - FIRE CABINET TANK SYSTEM

1 4 GALLON TANK.
2 PRIMARY ACTUATOR RELEASE.
3 SECONDARY ACTUATOR RELEASE.
4 PRESSURE SUPERVISION SWITCH.
5 PRIMARY HOSE ASSEMBLY.
6 SECONDARY HOSE ASSEMBLY.
7 REMOTE MANUAL ACTUATION DEVICE.

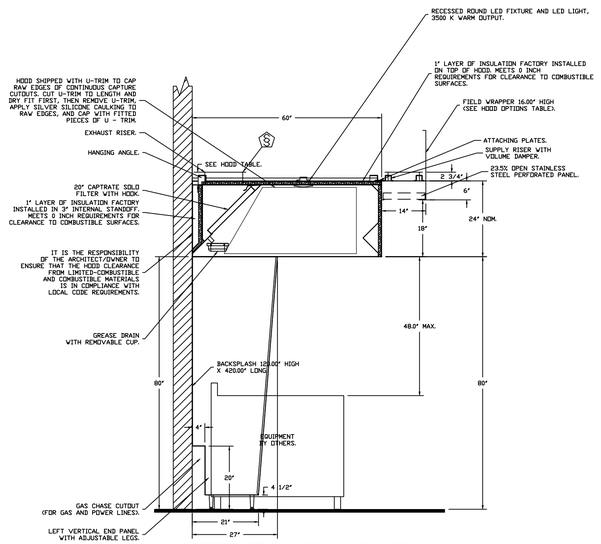

SECTION VIEW - MODEL 6024ND-2-PSP-F HOOD - #1

INCLUDES: FIELD INSTALLATION AND HOOKUP DURING NORMAL BUSINESS HOURS BY CERTIFIED INSTALLERS ONLY IN THE LOCATION NOTED ABOVE. TWO SITE VISITS ONLY (ONE VISIT TO SET PULL STATION & SYSTEM HOOKUP AND ONE VISIT FOR ONE TEST) ADDITIONAL VISITS WILL RESULT IN ADDITIONAL CHARGES). ONE MECHANICAL OR ELECTRICAL GAS VALVE PER SYSTEM AT A MAXIMUM SIZE OF 2", PERMIT, AND SYSTEM TEST.
EXCLUDES: UNION LABOR & PREVAILING WAGE (LABOR & WAGES WILL BE ADDED IF APPLICABLE), GAS VALVE INSTALLATION, ELECTRICAL HOOKUP AND CONNECTIONS, HANGING OF FIRE CABINET, SHUNT TRIP, HANDHELD EXTINGUISHERS), ON-SITE RE-PIPING DUE TO EQUIPMENT LAYOUT CHANGES.

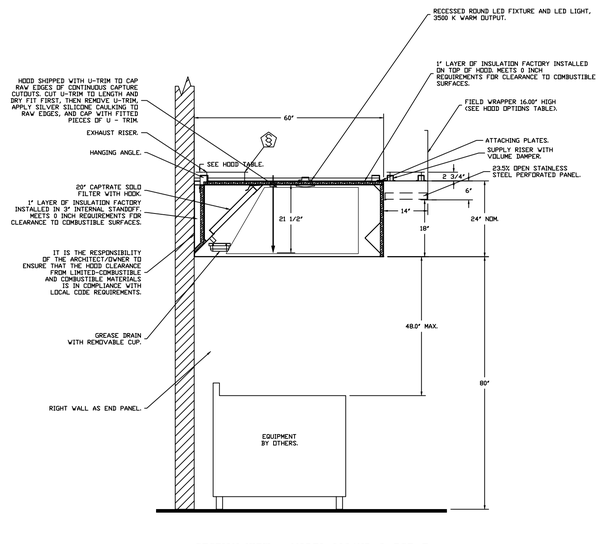

SECTION VIEW - MODEL 6024ND-2-PSP-F HOOD - #2

FIRE SYSTEM INFORMATION - JOB#7294832

FIRE SYSTEM NO	TAG	TYPE	SIZE	MAX FP	DESIGN FP	INSTALLATION	
						SYSTEM	LOCATION ON HOOD
1		TANK FS	4.0/4.0/4.0/4.0	80	62	FIRE CABINET LEFT	LEFT, HOOD 1

FIRE SYSTEM PARTS LIST KEY

FIRE SYSTEM NO	TAG	KEY NUMBER - PART DESCRIPTION	QTY BY FACTORY	QTY BY DIST
1		0 - 0 - TANK FIRE SUPPRESSION POST-DISCHARGE PROCEDURE UTILITY CABINET LABEL SHEET.	1	0
		0 - 0 - TANK FIRE SUPPRESSION MAINTENANCE GUIDE UTILITY CABINET LABEL SHEET.	1	0
		0 - 0 - 12-F28001-32144-DT-360 DUCT FIRE THERMOSTAT WITH 12 FOOT WIRE LEADS. NO, CLOSE ON TEMP RISE AT 360°F. (A0034310).	4	0
		0 - 0 - 32-00002 QUIK SEAL - 1/2" (UL).	4	0
		0 - 0 - 361091 3/8" BRASS PLUG.	5	0
		0 - 0 - 4429K153 1/2" MALE NPT TO 1/2" FEMALE NPT ELBOW, BRASS.	4	0
		0 - 0 - 4429K422 1/2" X 1/4" BRASS REDUCING BUSHING.	2	0
		0 - 0 - 79425 3/8" NPT FEMALE TO 1/2" MALE PROPRESS ADAPTER.	5	0
		0 - 0 - 79525 1/2" 90 PRO-PRESS ELBOW WITH 1/2" NPT FEMALE CONNECTION, VIEGA.	2	0
		0 - 0 - 79580 1/2" X 1/2" PRO-PRESS TEE X 1/2" NPT FEMALE CONNECTION, VIEGA.	4	0
		0 - 0 - 87-120042-001 SECONDARY ACTUATOR VALVE (SVA) - SINGLE ACTUATOR, REQUIRES PRIMARY RELEASE ACTUATOR, TANK FIRE SUPPRESSION.	3	0
		0 - 0 - 87-120045-001 HOSE, SECONDARY ACTUATOR HOSE, 7.5" BRAIDED STAINLESS STEEL, TANK FIRE SUPPRESSION.	3	0
		0 - 0 - 87-300001-001 TANK - PRESSURIZED TANK USED FOR TANK FIRE SUPPRESSION.	4	0
		0 - 0 - 87-300030-001 PRIMARY ACTUATOR KIT (PAK) - ACTUATOR AND RELEASE SOLENOID ASSEMBLY, ONE NEEDED PER FIRE SYSTEM, SUPERVISED, TANK FIRE SUPPRESSION.	1	0
		0 - 0 - 87-300033-001 DIN CONNECTOR, CANFIELD PART #5.0560-201-EU0A, TANK FIRE SUPPRESSION, SUBMINATURE SOLENOID CONNECTION (CED VENDOR 30377).	1	0
		0 - 0 - 87-300152-001 HARDWARE, SVA BOLTS, TANK FIRE SUPPRESSION.	16	0
		0 - 0 - 9055455PC PRO PRESS 1/2 PRESS X PRESS 90 ELBOW L.D.	13	0
		0 - 0 - 9097209PC PRO PRESS PC611 1/2 PRESS TEE L.D.	13	0
		0 - 0 - 986964A115 HARDWARE, DATANKLOCK LOCKING BRACKET SQUARE NUTS 5/16" ZINC, TANK FIRE SUPPRESSION.	8	0
		0 - 0 - A0034332 JUNCTION BOX FOR MANUAL PULL STATION. 1.5" DEEP BACK BOX, RED COLOR.	1	0
		0 - 0 - A31484 1/4" NPT SCHRADER VALVE AND CAP, JB INDUSTRIES. 1/4" FLARE X 1/4" MPT HALF UNION. USED ON TANK SERVICE PORT.	2	0
		0 - 0 - B1145 3/8" BLACK IRON 90 ELL.	8	0
		0 - 0 - DATANKLOCK DISCHARGE ADAPTER TANK LOCKING PLATE FOR FIRE SYSTEM TANK INSTALLATION IN UTILITY CABINETS, TANK FIRE SUPPRESSION.	4	0
		0 - 0 - SLPCON-03FT SUPERVISED LOOP CONNECTION KIT. CONTAINS THE PARTS NEEDED TO CONNECT THE SUPERVISED LOOP BETWEEN END TO END HOODS WITH LESS THAN A 2" GAP. KIT CONTAINS 3 FEET OF BLACK MG WIRE, 5 FEET OF TAN MG WIRE, 3 FEET OF FLEXIBLE CONDUIT, AND TWO 7/8" CONNECTORS.	1	0
		0 - 0 - SLPCON-05FT SUPERVISED LOOP CONNECTION KIT. CONTAINS THE PARTS NEEDED TO CONNECT THE SUPERVISED LOOP BETWEEN END TO END HOODS WITH LESS THAN A 4" GAP. KIT CONTAINS 7 FEET OF BLACK MG WIRE, 7 FEET OF TAN MG WIRE, 5 FEET OF FLEXIBLE CONDUIT, AND TWO 7/8" CONNECTORS.	1	0
		0 - 0 - SLPCON-40FT SUPERVISED LOOP CONNECTION KIT. CONTAINS THE PARTS NEEDED TO CONNECT THE SUPERVISED LOOP BETWEEN HOODS WITH UPTO 39" GAP. KIT CONTAINS 42 FEET OF BLACK MG WIRE, 42 FEET OF TAN MG WIRE, 40 FEET OF FLEXIBLE CONDUIT, AND TWO 7/8" CONNECTORS.	1	0
		0 - 0 - TANK STRAP TANK STRAP - USED FOR TANK FIRE SUPPRESSION.	12	0
		0 - 0 - TFS-UCTANKBRACKET TANK BRACKET FOR FIRE SYSTEM TANK INSTALLATION IN UTILITY CABINETS, TANK FIRE SUPPRESSION.	4	0
		0 - 0 - WK-283952-000 DISCHARGE ADAPTER, TANK FIRE SUPPRESSION.	4	0
		16 - 16 - 79210 1/2" X 3/8" NPT MALE ADAPTER, VIEGA.	14	0
		16 - 16 - DL-F NOZZLE - TANK PROTECTION APPLIANCE COVERAGE NOZZLE (INCLUDES METAL BLOW OFF CAP, LANYARD, USED WITH CHROME-PLATED PIPE).	14	0
		26 - 26 - GSA-3/8 QUIK SEAL - 3/8" (UL).	14	0
		34 - 34 - A0034331 24VDC SINGLE ACTION MANUAL ACTUATION DEVICE (PUSH/PULL STATION) WITH PROTECTIVE COVER, ONE (1) NORMALLY OPEN CONTACT. RED COLOR.	1	0

REVISIONS

DESCRIPTION	DATE:

CAPTIVEAIRE
www.captiveaire.com
Montana
PO Box 1089, 100 Blerney Creek Rd, Unit B/C, Lakeside, MT. 59922 PHONE: FAX: 9192275973 EMAIL: reg88@captiveaire.com

Twin Falls Jail
TWIN FALLS, ID, 83301

DATE: 1/23/2025

DWG.#: 7294832

DRAWN BY: NDC-88

SCALE: 1/2" = 1'-0"

MASTER DRAWING

SHEET NO. 4

EXHAUST FAN INFORMATION – JOB#7294832

FAN UNIT NO	TAG	QTY	FAN UNIT MODEL #	MANUFACTURER	CFM	ESP	RPM	MOTOR ENCL	HP	BHP	PHASE	VOLT	FLA	DISCHARGE VELOCITY	WEIGHT (LBS)	SONES
1	KEF-1	1	DU180HFA	CAPTIVEAIRE	3200	1.750	1480	ODP,PREMIUM	3.000	1.9460	3	208	9.5	739 FPM	233	25.3
2	KEF-2	1	DU180HFA	CAPTIVEAIRE	3200	1.750	1480	ODP,PREMIUM	3.000	1.9460	3	208	9.5	739 FPM	233	25.3
3	EF-DISH	1	DU50HFA	CAPTIVEAIRE	1400	0.350	1788	TEAD-ECM	0.500	0.4990	1	115	6.3	532 FPM	111	21.9

MUA FAN INFORMATION – JOB#7294832

FAN UNIT NO	TAG	QTY	FAN UNIT MODEL #	BLOWER	HOUSING	MIN CFM	DESIGN CFM	ESP	RPM	MOTOR ENCL	HP	BHP	PHASE	VOLT	FLA	MCA	MOCP	EVAP FLOW RATE (Gal/Hr)	EVAP COOLER ENTERING DB TEMP	EVAP COOLER ENTERING WB TEMP	EVAP COOLER LEAVING DB TEMP	EVAP COOLER LEAVING WB TEMP	WEIGHT (LBS)	SONES
4	MAU-1	1	A3-D.750-24D	24MF-3-MOD	A3-D.750	3500	6400	0.500	1499	ODP,PREMIUM	10.000	5.1610	3	208	27.0	35.9A	60A	5.63	92.0°F	62.0°F	73.0°F	62.0°F	1486	14.6

GAS FIRED MAKE-UP AIR UNIT(S)

FAN UNIT NO	TAG	INPUT BTUs	OUTPUT BTUs	TEMP RISE	REQUIRED INPUT GAS PRESSURE	GAS TYPE	BURNER EFFICIENCY(%)
4	MAU-1	587325	540339	100°F	7 IN. W.C. - 14 IN. W.C.	NATURAL	92

FAN OPTIONS

FAN UNIT NO	TAG	QTY	DESCRIPTION
1	KEF-1	1	GREASE BOX
		1	FULL CRATING FOR EXHAUST FANS
		1	FAN BASE CERAMIC SEAL - DU/DR180HFA - SHIP LOOSE - FOR GREASE DUCTS
		1	UNIT MOUNTED VFD FOR USE WITH ECPM03
		1	VFD MOUNTING BRACKET FOR DU/DR 180 - 200
		1	EXHAUST FAN HEAT BAFFLE
		1	2 YEAR PARTS WARRANTY
2	KEF-2	1	GREASE BOX
		1	FULL CRATING FOR EXHAUST FANS
		1	FAN BASE CERAMIC SEAL - DU/DR180HFA - SHIP LOOSE - FOR GREASE DUCTS
		1	UNIT MOUNTED VFD FOR USE WITH ECPM03
		1	VFD MOUNTING BRACKET FOR DU/DR 180 - 200
		1	EXHAUST FAN HEAT BAFFLE
		1	2 YEAR PARTS WARRANTY
3	EF-DISH	1	FULL CRATING FOR EXHAUST FANS
		1	ECM WIRING PACKAGE - EXHAUST - MANUAL OR 0-10VDC REFERENCE SPEED CONTROL -MSC-(TELCO), CCW ROTATION
		1	SCR-13 BIRD SCREEN
		1	I 15-BDD DAMPER
		1	2 YEAR PARTS WARRANTY
4	MAU-1	1	SIZE 3 TEMPERED COMMERCIAL DOWN DISCHARGE FOR DIRECT DRIVE AHUS
		1	INLET PRESSURE GAUGE, 0-35"
		1	MANIFOLD PRESSURE GAUGE, -5 TO 15" WC
		1	BUTTERFLY MOD VALVE OPTION FOR MOD SIZE 3 (1" MOD VALVE)
		1	SHIP LOOSE GAS STRAINER 1"
		1	CASLINK BUILDING MONITORING SYSTEM - INTERNET OR CELLULAR CONNECTION REQUIRED
		1	MOTORIZED BACKDRAFT DAMPER FOR A3-D HOUSING - MEETS AMCA CLASS 1A RATING
		1	FULL CRATING FOR COMMERCIAL HEATER
		1	IBT/MUA EVAP INTERLOCK
		1	CONTROL PANEL ENCLOSURE HEATER 100W - RECOMMENDED FOR WINTER DESIGN TEMPERATURES LESS THAN 0°F
		1	FREEZE PROTECTION DRAIN KIT FOR IBT/MUA WITH EVAPORATIVE COOLERS
		1	FREEZESTAT
		1	UNIT MOUNTED VFD FOR USE WITH ECPM03
		1	2 YEAR PARTS WARRANTY
		1	EXTERIOR GAS CONNECTION PROVIDED BY FACTORY WITH QUICK SEAL AND ANTI-ROTATION BRACKET

FAN ACCESSORIES

FAN UNIT NO	TAG	EXHAUST			SUPPLY			
		GREASE CUP	GRAVITY DAMPER	WALL MOUNT	SIDE DISCHARGE	GRAVITY DAMPER	MOTORIZED DAMPER	WALL MOUNT
1	KEF-1	YES						
2	KEF-2	YES						
3	EF-DISH		YES					
4	MAU-1						YES	

CURB ASSEMBLIES

NO	ON FAN	TAG	WEIGHT	ITEM	SIZE
1	# 1	KEF-1	43 LBS	CURB	26.500"W X 26.500"L X 20.000"H VENTED HINGED.
2	# 2	KEF-2	43 LBS	CURB	26.500"W X 26.500"L X 20.000"H VENTED HINGED.
3	# 3	EF-DISH	18 LBS	CURB	19.500"W X 19.500"L X 14.000"H.
4	# 4	MAU-1	94 LBS	CURB	35.000"W X 84.000"L X 20.000"H INSULATED.
	# 4			RAIL	4.000"W X 4.000"L X 36.000"H.

HMI SCHEDULE				
UNIT NUMBER	HMI #	HMI LOCATION	TEMP AVERAGING	MODBUS ADDRESS
FAN #4	HMI #1 - UNIT	IN UNIT	NOT AVERAGED	55

FANS #1 (KEF-1), #2 (KEF-2) - DU180HFA EXHAUST FAN

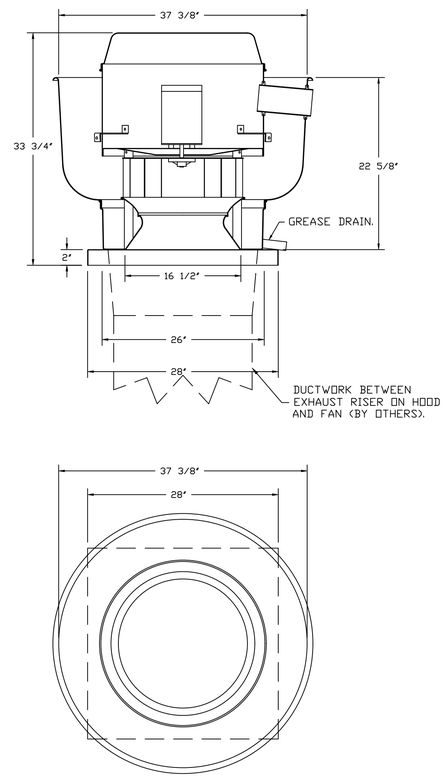

TOP VIEW

FEATURES:

- DIRECT DRIVE CONSTRUCTION (NO BELTS/PULLEYS).
- ROOF MOUNTED FANS.
- RESTAURANT MODEL.
- UL705 AND UL762 AND ULC-S645
- VARIABLE SPEED CONTROL.
- INTERNAL WIRING.
- THERMAL OVERLOAD PROTECTION (SINGLE PHASE).
- HIGH HEAT OPERATION 300°F (149°C).
- GREASE CLASSIFICATION TESTING.
- NEMA 3R SAFETY DISCONNECT SWITCH.

NORMAL TEMPERATURE TEST
EXHAUST FAN MUST OPERATE CONTINUOUSLY WHILE EXHAUSTING AIR AT 300°F (149°C) UNTIL ALL FAN PARTS HAVE REACHED THERMAL EQUILIBRIUM, AND WITHOUT ANY DETERIORATING EFFECTS TO THE FAN WHICH WOULD CAUSE UNSAFE OPERATION.

ABNORMAL FLARE-UP TEST
EXHAUST FAN MUST OPERATE CONTINUOUSLY WHILE EXHAUSTING BURNING GREASE VAPORS AT 600°F (316°C) FOR A PERIOD OF 15 MINUTES WITHOUT THE FAN BECOMING DAMAGED TO ANY EXTENT THAT COULD CAUSE AN UNSAFE CONDITION.

OPTIONS

- GREASE BOX.
- FULL CRATING FOR EXHAUST FANS.
- FAN BASE CERAMIC SEAL - DU/DR180HFA
- SHIP LOOSE - FOR GREASE DUCTS.
- UNIT MOUNTED VFD FOR USE WITH ECPM03.
- VFD MOUNTING BRACKET FOR DU/DR 180 - 200.
- EXHAUST FAN HEAT BAFFLE.
- 2 YEAR PARTS WARRANTY.

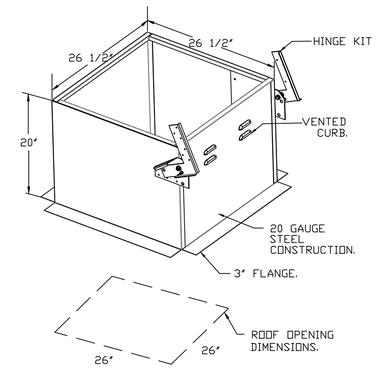

REVISIONS

DESCRIPTION	DATE:

CAPTIVEAIRE
www.captiveaire.com
Montana
PO Box 1089, 100 Blerney Creek Rd, Unit B/C, Lakeside, MT 59922 PHONE: FAX: 9192275973 EMAIL: reg88@captiveaire.com

Twin Falls Jail
TWIN FALLS, ID, 83301

DATE: 1/23/2025

DWG.#: 7294832

DRAWN BY: NDC-88

SCALE: 3/4" = 1'-0"

MASTER DRAWING

SHEET NO. 5

FAN #3 DU50HFA - EXHAUST FAN (EF-DISH)

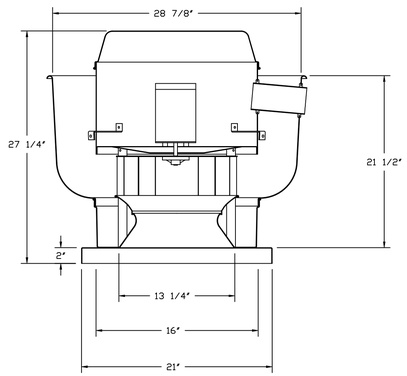

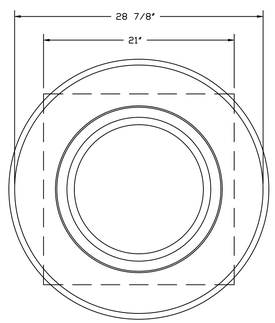

TOP VIEW

FEATURES:

- DIRECT DRIVE CONSTRUCTION (NO BELTS/PULLEYS).
- ROOF MOUNTED FANS.
- UL705.
- VARIABLE SPEED CONTROL.
- INTERNAL WIRING.
- THERMAL OVERLOAD PROTECTION (SINGLE PHASE).
- NEMA 3R SAFETY DISCONNECT SWITCH.

OPTIONS

- FULL CRATING FOR EXHAUST FANS.
- ECM WIRING PACKAGE - EXHAUST - MANUAL OR 0-10VDC REFERENCE SPEED CONTROL -MSC- (TELCO), CCW ROTATION.
- SCR-13 BIRD SCREEN.
- 1 IS-BDD DAMPER.
- 2 YEAR PARTS WARRANTY.

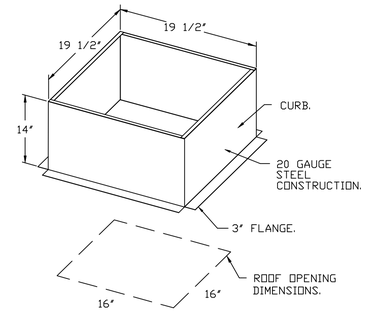

BACKDRAFT DAMPER INSTALLATION

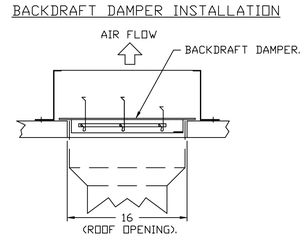

REVISIONS

DESCRIPTION	DATE:

CAPTIVEAIRE
www.captiveaire.com
Montana
PO Box 1089, 100 Blerney Creek Rd, Unit B/C, Lakeside, MT 59922 PHONE: FAX: 9192275973 EMAIL: reg88@captiveaire.com

Twin Falls Jail
TWIN FALLS, ID, 83301

DATE: 1/23/2025

DWG.#: 7294832

DRAWN BY: NDC-88

SCALE: 3/4" = 1'-0"

MASTER DRAWING

SHEET NO.
6

FAN #4 A3-3750-240 - HEATER OMAU-3
1. DIRECT GAS FIRED HEATED MAKE UP AIR UNIT WITH 24" MIXED FLOW DIRECT DRIVE FAN AND 18" BURNER.
2. EVAP COOLER (LPD CELDEK) - PINTAKE HOOD W/EZ FILTERS.
3. DOWN DISCHARGE - MIXED FLOW RATED FAN.
4. SEAL TIGHT DISCHARGE CONSTRUCTION FOR SIZE 3 DIRECT DRIVE AHUS.
5. GAS PRESSURE GAUGE, -5 TO +15 INCHES W.C., 2.5" DIAMETER, 1/4" THREAD SIZE.
6. GAS PRESSURE GAUGE, -5 TO +15 INCHES W.C., 2.5" DIAMETER, 1/4" THREAD SIZE.
7. BUTTERFLY MOD VALVE OPTION FOR MOD SIZE 3 (1" MOD VALVE).
8. SHOP LOOSE GAS STRAINER TO BE INSTALLED UPSTREAM OF UNIT CONNECTION. 1" CONNECTION.
9. CASLINK BUILDING MONITORING SYSTEM COMMUNICATIONS MODULE REQUIRES INTERNET & FIELD WIRED ETHERNET CONNECTION OR 3G CELLULAR SERVICE. INCLUDES REV 3 COMM MODULE, RJ45 TO MODBUS CONVERTER, 3 FT CAT5 CABLE, AND 1 FT OF SHIELDED TWISTED PAIR.
10. MOTORIZED BACK DRAFT DAMPER 30" X 30" FOR SIZE 3 STANDARD & MODULAR HEATER UNITS W/EXTENDED SHAFT, STANDARD GALVANIZED CONSTRUCTION, 3/4" REAR FLANGE, LOW LEAKAGE, NFBUP-S ACTUATOR INCLUDED.
11. FULL CRATING FOR COMMERCIAL HEATERS FOR SHIPPING.
12. LAYER CONTROL FOR IBT EVAP.
13. CONTROL PANEL ENCLOSURE HEATER, INCLUDES 100W, 120V HEATER. RECOMMENDED FOR WINTER DESIGN TEMPERATURE LESS THAN 0°F. OPERATES ON PCB CONTROLS IN IBT SINGLE MODULES OR RTU.
14. FREEZE PROTECTION DRAIN CONTROL KIT FOR EVAPORATIVE COOLERS. INCLUDES 3-WAY WATER SOLENOID VALVE B316G064 (SHIPPED LOOSE). PRESSURE SWITCH INSTALLED UPSTREAM OF 2WAY SOLENOID IN UNIT. BRASS TEE AND 2 NPT HALF INCH NIPPLES. 24VAC WIRING REQUIRED BY OTHERS FOR 3-WAY VALVE. FOR BOTH CELDEK AND STANDARD V-BANK TYPE CONFIGURATIONS.
15. FREEZESTAT.
16. UNIT MOUNTED VFD FOR USE WITH ECPM03.
17. HINGED DOUBLE WALL INSULATED DOOR ASSEMBLY (BURNER/BLOWER/EVAP SECTIONS).
18. EXTERIOR GAS CONNECTION PROVIDED BY FACTORY WITH QUICK SEAL AND ANTI-ROTATION BRACKET.
19. 2 YEAR PARTS WARRANTY.

*NOTE: SUPPLY DUCT MUST BE INSTALLED TO MEET SMACNA STANDARDS. A MINIMUM STRAIGHT DUCT LENGTH MUST BE MAINTAINED DOWNSTREAM OF UNIT DISCHARGE AS OUTLINED IN AMCA PUBLICATION 201. WHEN USING RECTANGULAR DUCTWORK, ELBOWS MUST BE RADIUS THROAT, RADIUS BACK WITH TURNING VANES. FLEXIBLE DUCTWORK AND SQUARE THROAT/SQUARE BACK ELBOWS SHOULD NOT BE USED. ANY TRANSITION AND/OR TURNS IN THE DUCTWORK WILL CAUSE SYSTEM EFFECT. SYSTEM EFFECT WILL DRASTICALLY INCREASE STATIC PRESSURE AND REDUCE AIRFLOW. DO NOT RELY ON UNIT TO SUPPORT DUCT IN ANY WAY. FAILURE TO PROPERLY SIZE DUCTWORK MAY CAUSE SYSTEM EFFECTS AND REDUCE PERFORMANCE OF THE EQUIPMENT.
SUGGESTED STRAIGHT DUCT SIZE IS 24" x 24".

SUPPLY SIDE HEATER INFORMATION:

WINTER TEMPERATURE = 12°F. TEMP. RISE = 100°F.
BTUs CALCULATED OFF ACTUAL AIR DENSITY.
OUTPUT BTUs AT ALTITUDE OF 0.0 FT. = 639484.
INPUT BTUs AT ALTITUDE OF 0.0 FT. = 695092.
OUTPUT BTUs AT ALTITUDE OF 4588 FT. = 540339.
INPUT BTUs AT ALTITUDE OF 4588 FT. = 587325.

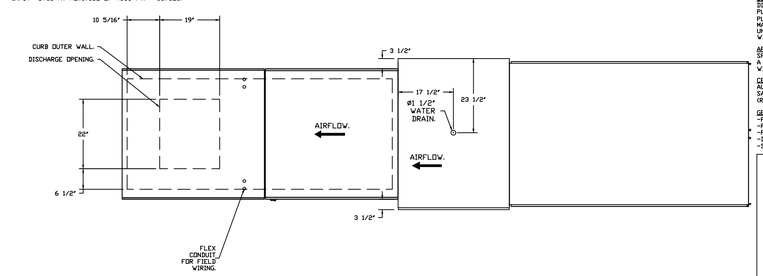

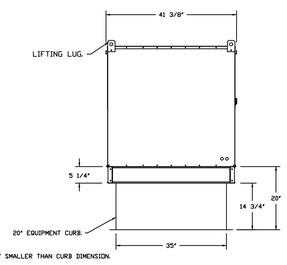

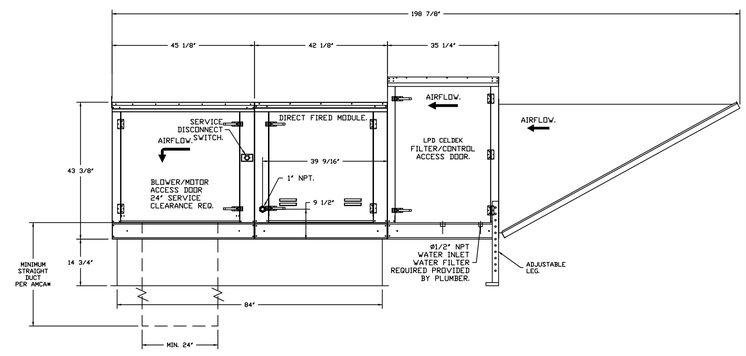

OPTIONS:
- FULL BOTTOM CORNERS.

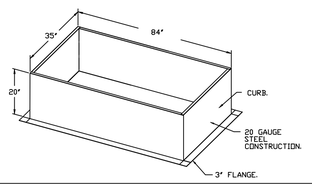

GREASE DUCT & CHIMNEY SPECIFICATIONS:
PROVIDE GREASE DUCT EQUAL TO CAPTIVEAIRE SYSTEMS MODEL "DW" ROUND 20 GAUGE 430 STAINLESS STEEL DUCTWORK. MODEL "DW" IS LISTED TO UL-1978 AND IS INSTALLED USING "V" CLAMP LOCKING CONNECTIONS SEALED WITH 3M FIRE BARRIER 2000 PLUS. MODEL "DW" DOES NOT REQUIRE WELDING PROVIDING IT HAS BEEN INSTALLED PER THE MANUFACTURES INSTALLATION GUIDE.
PROVIDE RATED ACCESS DOORS AT EVERY CHANGE IN DIRECTION AND EVERY 12' ON CENTER. PER MANUFACTURES LISTING MODEL "DW" HORIZONTAL RUNS LESS THAN 75 FT. CAN BE SLOPED 1/16" PER 12", HORIZONTAL RUNS MORE THAN 75 FT. CAN BE SLOPED 3/16" PER 12". DUCT SHOULD BE SLOPED AS MUCH AS POSSIBLE TO REDUCE THE CHANCE OF GREASE ACCUMULATION IN HORIZONTAL RUNS.

IF THE DUCT OR CHIMNEY IS WITHIN 18 INCHES OF COMBUSTIBLE MATERIAL, PROVIDE UL-2221 OR UL-103 HT LISTED DOUBLE WALL GREASE DUCT OR DOUBLE WALL CHIMNEY EQUAL TO CAPTIVEAIRE SYSTEMS MODEL "DW- 2R, 2R TYPE HT, 3R, OR 3Z" ROUND 20 GAUGE 430 STAINLESS INNER DUCT INSULATED WITH A 24 GAUGE 430 STAINLESS OUTER SHELL.

CUSTOMER APPROVAL TO MANUFACTURE:

APPROVED AS NOTED ☐
APPROVED WITH NO EXCEPTION TAKEN ☐
REVISE AND RESUBMIT ☐
SIGNATURE _____
YOUR TITLE _____ DATE _____

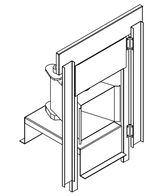

DIRECT FIRED (DF) PROFILE PLATE ASSEMBLY

DIRECT FIRED PROFILE PLATE SPECIFICATIONS:
DESCRIPTION:
DIRECT FIRED BURNERS SHALL HAVE PATENTED (US PATENT NO: US6629523B2), SELF-ADJUSTING PROFILE PLATES DESIGNED TO ENSURE PROPER AIR VELOCITY AND PRESSURE DROP ACROSS THE BURNER. PROFILE PLATES SHALL ALLOW BURNERS TO ACHIEVE CLEAN COMBUSTION BY LIMITING BY-PRODUCT LEVELS TO A MAXIMUM OF 5 PPM OF CARBON MONOXIDE (CO) AND 5 PPM OF NITROGEN DIOXIDE (NO2)DIRECT FIRED UNITS SHALL BE CONFIGURED WITH THE BLOWER MOUNTED DOWNSTREAM OF THE BURNER. THIS ARRANGEMENT WILL ENSURE A CONSISTENT AIRFLOW, REGARDLESS OF INLET AIR TEMPERATURE.

APPLICATION:
SPRING-LOADED BURNER PROFILE PLATES ARE ENGINEERED TO AUTOMATICALLY REACT TO THE MOMENTUM OF A FRESH AIR STREAM, WITHOUT THE NEED FOR ANY MOTORS OR ACTUATORS TO MECHANICALLY ADJUST THEM. WITH THIS FEATURE, ALL DF UNITS ARE DESIGNED FOR DEMAND CONTROL VENTILATION (DCV) REQUIREMENTS.

CERTIFICATIONS:
ALL PROFILE PLATE ASSEMBLIES SHALL BE INCLUDED IN THE DF UNIT'S ETL LISTING AND COMPLY WITH COMBINED SAFETY STANDARDS ANSI Z83.4 AND CSA 3.7 (NON-RECIRCULATING DF HEATERS) AND ANSI Z83.18 (RECIRCULATING DF HEATERS).

GENERAL CONSTRUCTION:
- PROFILE PLATES SHALL BE FORMED FROM G90 GALVANIZED STEEL.
- PROFILE PLATES SHALL VARY IN SIZE PER UNIT.
- PROFILE PLATES SHALL BE MOUNTED ALONG THE SAME PLANE AS THE DISCHARGE OF THE BURNER.
- DESIGN SHALL INCORPORATE PROPERLY TORQUED, PERMANENTLY MOUNTED SPRING HINGES.
- SPRING HINGES SHALL BE MADE FROM PLATED STEEL.

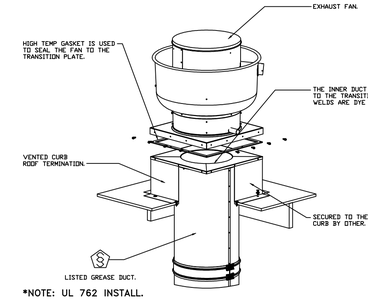

*NOTE: UL 762 INSTALL.

GREASEBOX
REV.#2 08/19/02

GREASE BOX INSTALLATION

CLOSED POSITION

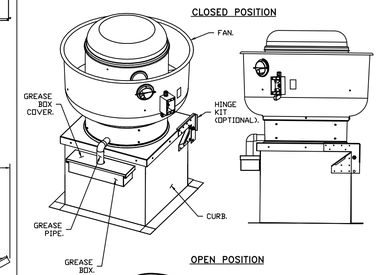

OPEN POSITION

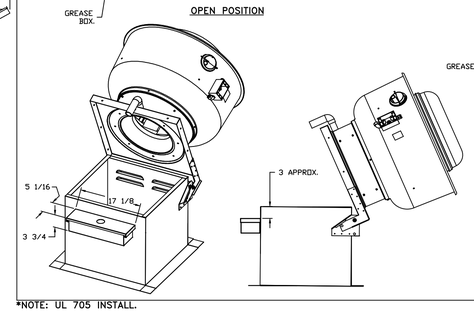

PARTS INCLUDED

GREASE BOX.
GREASE BOX COVER.
GREASE PIPE.

SHEET METAL SCREWS
3 - LONG (3/4" LG.).

GREASE BOX FIELD INSTALLATION

STEP 1)

ATTACH GREASE BOX COVER TO THE CURB.
HOLD 3" DIMENSION AS SHOWN ON PIC. 1.
SCREW GREASE BOX COVER TO CURB USING (3) LONG (3/4" LG.) SCREWS AS SHOWN ON PIC. 2.

PIC. 1

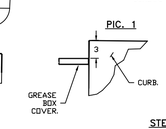

PIC. 2

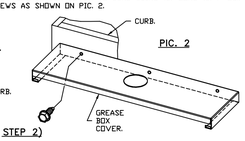

STEP 2)

ATTACH GREASE BOX TO GREASE BOX COVER, SLIDE AND DROP. AS SHOWN ON PIC. 3.

PIC. 3

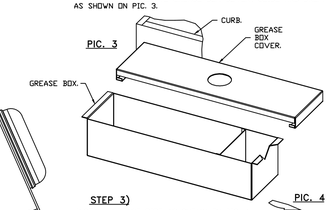

STEP 3)

INSTALL GREASE PIPE AS SHOWN ON PIC. 4.

PIC. 4

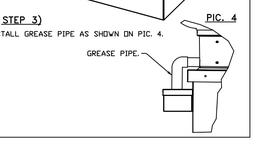

*NOTE: UL 705 INSTALL.

REVISIONS

DESCRIPTION	DATE:

CAPTIVEAIRE
www.captiveaire.com
PO Box 1089, 100 Blerney Creek Rd, Unit B/C, Lakeside, MT 59922 PHONE: FAX: 9192275973 EMAIL: reg88@captiveaire.com
Montana

Twin Falls Jail
TWIN FALLS, ID, 83301

DATE: 1/23/2025
DWG.#: 7294832
DRAWN BY: NDC-88
SCALE: 1/2" = 1'-0"
MASTER DRAWING

SHEET NO.
7

Exhaust Fan Wiring

DRAWING NUMBER EXH7294832-1	SHIP DATE 1/23/2025	MODEL DU180HFA

JOB 7294832 - Twin Falls Jail

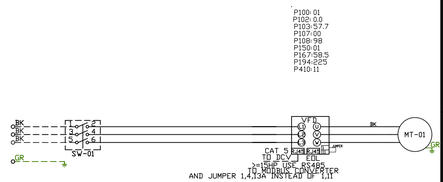

Installed Options

Component Identification

Label	Description	Location
MT-01	Fan Motor	[3]
SV-01	Main disconnect switch	[3]

MOTOR INFO

EXHAUST 3.0HP-208V-3P-9.5FLA
VFD PART: ESV822N02YXB571

ELECTRICAL INFORMATION

MOTOR/CTRL MCA 13.9A
MOTOR/CTRL MOP: 20A

NOTES

- - - - DENOTES FIELD WIRING
——— DENOTES INTERNAL WIRING

WIRE COLOR

BK - BLACK	YW - YELLOW
BL - BLUE	GR - GREEN
BR - BROWN	GY - GRAY
OR - ORANGE	PR - PURPLE
RD - RED	PK - PINK
WH - WHITE	

Exhaust Fan Wiring

DRAWING NUMBER EXH7294832-2	SHIP DATE 1/23/2025	MODEL DU180HFA

JOB 7294832 - Twin Falls Jail

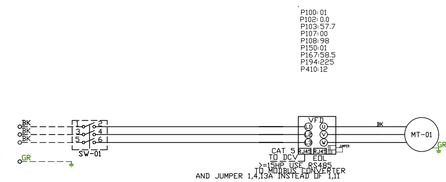

Installed Options

Component Identification

Label	Description	Location
MT-01	Fan Motor	[3]
SV-01	Main disconnect switch	[3]

MOTOR INFO

EXHAUST 3.0HP-208V-3P-9.5FLA
VFD PART: ESV822N02YXB571

ELECTRICAL INFORMATION

MOTOR/CTRL MCA 13.9A
MOTOR/CTRL MOP: 20A

NOTES

- - - - DENOTES FIELD WIRING
——— DENOTES INTERNAL WIRING

WIRE COLOR

BK - BLACK	YW - YELLOW
BL - BLUE	GR - GREEN
BR - BROWN	GY - GRAY
OR - ORANGE	PR - PURPLE
RD - RED	PK - PINK
WH - WHITE	

Exhaust Fan Wiring

DRAWING NUMBER EXH7294832-3	SHIP DATE 1/23/2025	MODEL DU50HFA

JOB 7294832 - Twin Falls Jail

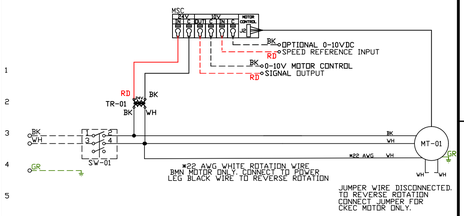

Installed Options

Component Identification

Label	Description	Location
MT-01	Fan Motor	[3]
MSC	Motor Speed Controller	[1]
SV-01	Main disconnect switch	[3]
TR-01	24VAC 20VA Transformer	[2]

MOTOR INFO

EXHAUST 0.5HP-115V-1P-6.3FLA

ELECTRICAL INFORMATION

MOTOR/CTRL MCA 7.9A
MOTOR/CTRL MOP: 15A

NOTES

- - - - DENOTES FIELD WIRING
——— DENOTES INTERNAL WIRING

WIRE COLOR

BK - BLACK	YW - YELLOW
BL - BLUE	GR - GREEN
BR - BROWN	GY - GRAY
OR - ORANGE	PR - PURPLE
RD - RED	PK - PINK
WH - WHITE	

REVISIONS

DESCRIPTION	DATE:

CAPTIVEAIRE
www.captiveaire.com
Montana
PO Box 1089, 100 Blerney Creek Rd, Unit B/C, Lakeside, MT 59922 PHONE: FAX: 9192275973 EMAIL: reg88@captiveaire.com

Twin Falls Jail
TWIN FALLS, ID, 83301

DATE: 1/23/2025

DWG.#: 7294832

DRAWN BY: NDC-88

SCALE: 3/4" = 1'-0"

MASTER DRAWING

SHEET NO. 8

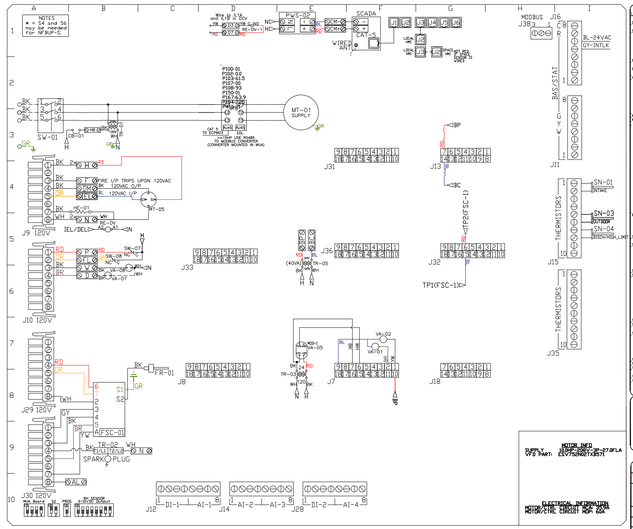

COMPONENT LIST

LABEL	DESCRIPTION	
CB-01	CIRCUIT_BREAKER	BU
SCADA	SCADA_COMM_MODULE	FC
FR-01	EVS-EC24-40X-S1-MP	BU
FU-01	FUSE(FE_FLAME_SENSOR)	BU
HC-01	CABINET_HEATER	BU
MT-01	SUPPLY_MOTOR	DA
MT-02	BOARD_SAMPLE_MTR	
RE-01	DCV_RELAY	BS/DA
SN-01	TEMP_SENSOR	DA/OS/ST
SV-01	DISCONNECT_SWITCH	AO
SV-02	EVAP_PRESS_SWITCH	DA
SV-03	EVAP_FLOAT_SWITCH	DA
TR-01	CTRL_TRANSFORM	BU
TR-02	IGNITION_TRANSFORM	PM
TR-03	BOARD_POWER_TRFMR	CS
VA-01	PILOT_GAS_VALVE	CS
VA-02	MAIN_GAS_VALVE	CS
VA-03	MOD.GAS_VALVE	CS
VA-07	EVAP_S.WTR_VALVE	DA
VA-08	EVAP_VALVE	DA

LEGEND
---- FIELD WIRING
——— FACTORY WIRING
BK - BLACK YW - YELLOW
BL - BLUE OR - ORANGE
BR - BROWN GY - GRAY
PU - PURPLE
WH - WHITE RD - RED
GR - GREEN
BLWH - BLUE STRIPE
GRWH - GREEN STRIPE
WHBL - WHITE STRIPE

JOB NAME
Twin Falls Jail

DESCRIPTION OF OPERATION
MAIN BOARD
SEQUENCE TO FOLLOW

DATE	TIME BY
7294832	AUTO

DATE	
FACTORY	1/23/2025

DWG. NO. MW7294832-4

Evaporative Cooler Wiring

JOB	7294832 - Twin Falls Jail
DRAWING NUMBER	IBTEC7294832-4
SHIP DATE	1/23/2025
MODEL	AB-D-750-24D

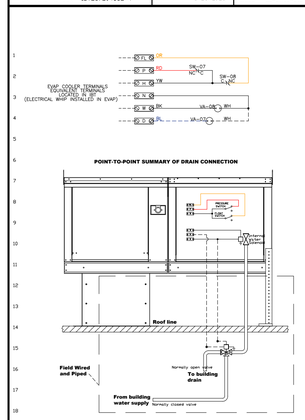

Installed Options
Freeze Protection

Component Identification

Label	Description	Location
SV-01	Pressure Switch	(E2E)
SV-08	Float Switch	(E2E)
VA-07	3 Way Drain Valve	(A2D3)
VA-08	Water Solenoid	(D2D3)

NOTES
---- BONDED FIELD WIRING
——— BONDED INTERNAL WIRING

WIRE COLOR
BK - BLACK YW - YELLOW
BL - BLUE OR - ORANGE
BR - BROWN GY - GRAY
PU - PURPLE
RD - RED GR - GREEN
WH - WHITE

Installation Wiring

JOB	7294832 - Twin Falls Jail
DRAWING NUMBER	BP7294832-4
SHIP DATE	1/23/2025
MODEL	AB-D-750-24D

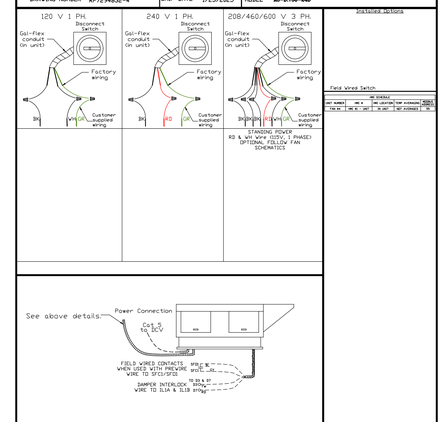

Installed Options

Field Wired Switch

AB SERIES						
UNIT NUMBER	AB-A	AB-LOCATION/TOP HORIZONTAL				MODEL
750 MT	24D MT	24D MT	30 MHT	30 MHT	MHT HORIZONTAL	30

NOTES

WIRE COLOR
BK - BLACK YW - YELLOW
BL - BLUE OR - ORANGE
BR - BROWN GY - GRAY
PU - PURPLE
RD - RED GR - GREEN
WH - WHITE

REVISIONS

DESCRIPTION	DATE:

CAPTIVEAIRE
www.captiveaire.com
Montana
PO Box 1089, 100 Blerney Creek Rd, Unit B/C, Lakeside, MT 59922 PHONE: FAX: 9192275973 EMAIL: reg88@captiveaire.com

Twin Falls Jail
TWIN FALLS, ID, 83301

DATE: 1/23/2025

DWG.#: 7294832

DRAWN BY: NDC-88

SCALE: 1/2" = 1'-0"

MASTER DRAWING

SHEET NO. 9

ELECTRICAL PACKAGE – JOB#7294832

NO	TAG	PACKAGE #	LOCATION	SWITCHES		OPTION	FANS CONTROLLED					
				LOCATION	QUANTITY		FAN TAG	TYPE	ϕ	HP	VOLT	FLA
1		DCV-2111	WALL MOUNT IN SS BOX	SHIP LOOSE W/ PREWIRE	1 LIGHT 1 FAN	SMART CONTROLS DCV	KEF-1	EXHAUST	3	3.000	208	9.5
							KEF-2	EXHAUST	3	3.000	208	9.5
							MAU-1	SUPPLY	3	10.000	208	27.0

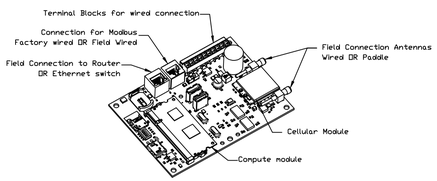

CASlink Monitor and Control

- Hood control panel to support communications to cloud-based Building Management System.
- Hood Control Panel to allow cloud-based Building Management System to monitor real time parameters outlined as MONITOR in the points list.
- Hood Control Panel to allow cloud-based Building Management System to control parameters outlined as CONTROL in the points list.
- Hood Control Panel to allow cloud-based Building Management System to implement SYSTEM ECONOMIZER control strategies for fully integrated Building Management.

MONITORING AND CONTROL POINTS LIST

DCV Packages	Function
Room Temperature	MONITOR
Duct Temperature(s)	MONITOR
MUA Discharge Temperature	MONITOR
Kitchen RTU Discharge Temperature	MONITOR
Fan Speed	MONITOR
Fan Amperage	MONITOR
Fan Power	MONITOR
VFD Faults	MONITOR
Controller Faults	MONITOR
Fan Faults	MONITOR
Fan Status	MONITOR
PCU Faults	MONITOR
PCU Filter Clog Percentages	MONITOR
Fire Condition	MONITOR
CORE Fire System	MONITOR
Building Pressures	MONITOR
Prep Time Button	MONITOR & CONTROL
Fans Button	MONITOR & CONTROL
Lights Button	MONITOR & CONTROL
Wash Button	MONITOR & CONTROL

SC Packages	Function
Room Temperature(s)	MONITOR
Duct Temperature(s)	MONITOR
MUA Discharge Temperature	MONITOR
Kitchen RTU Discharge Temperature	MONITOR
Controller Faults	MONITOR
Fan Faults	MONITOR
Fan Status	MONITOR
PCU Faults	MONITOR
PCU Filter Clog Percentages	MONITOR
Fire Condition	MONITOR
CORE Fire System	MONITOR
Building Pressures	MONITOR
Fans Button(s)	MONITOR & CONTROL
Lights Button(s)	MONITOR & CONTROL
Wash Button	MONITOR & CONTROL

JOB NO 7294832 | MODEL NUMBER DCV-2111 | JOB NAME Twin Falls Jail | DRAWN BY | DATE 1/23/2025 | SCHEMATIC TYPE INSTALL | DWG NO ECP #1-1

DESCRIPTION OF OPERATION:
Demand Control Ventilation, w/ control for 2 Exhaust Fans, 1 Supply Fan, Exhaust on in Fire, Lights out in Fire, Fans modulate based on duct temperature. INVERTER DUTY 3 PHASE MOTOR REQUIRED FOR USE WITH VFD. Room temperature sensor shipped loose for field installation.Verify distance between VFD and Motor; additional cost could apply if distance exceeds 50 feet.

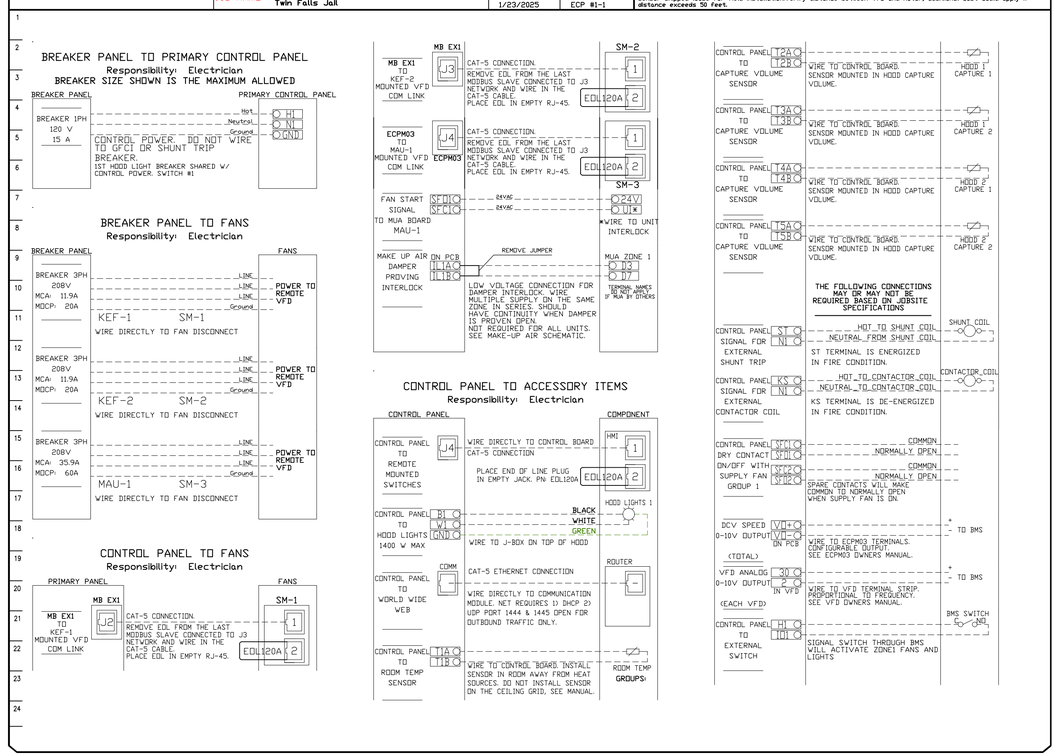

REVISIONS

DESCRIPTION	DATE:

CAPTIVEAIRE
www.captiveaire.com
Montana
PO Box 1089, 100 Blerney Creek Rd, Unit B/C, Lakeside, MT 59922 PHONE: FAX: 9192275973 EMAIL: reg88@captiveaire.com

Twin Falls Jail
TWIN FALLS, ID, 83301

DATE: 1/23/2025

DWG.#: 7294832

DRAWN BY: NDC-88

SCALE: 3/4" = 1'-0"

MASTER DRAWING

SHEET NO. 10

JOB NO	MODEL NUMBER	DRAWN BY	SCHEMATIC TYPE	DESCRIPTION OF OPERATION:
7294832	DCV-2111		INSTALL	Demand Control Ventilation, w/ control for 2 Exhaust Fans, 1 Supply Fan. Exhaust on in Fire, Lights out in Fire, Fans modulate based on duct temperature. INVERTER DUTY 3 PHASE MOTOR REQUIRED FOR USE WITH VFD. Room temperature sensor shipped loose for field installation.Verify distance between VFD and Motor; additional cost could apply if distance exceeds 50 feet.
JOB NAME		DATE	DWG NO	
Twin Falls Jail		1/23/2025	ECP #1-2	

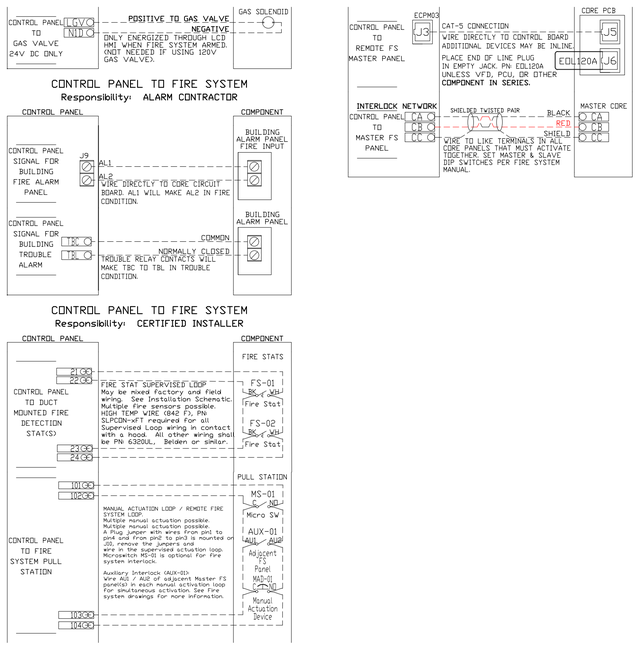

JOB NO	MODEL NUMBER	DRAWN BY	SCHEMATIC TYPE	DESCRIPTION OF OPERATION:
7294832	DCV-2111		INSTALL	Fire System #1 TANK FS - 42/42/42/42.
JOB NAME		DATE	DWG NO	
Twin Falls Jail		1/23/2025	ECP #1-3	

TANK PROTECTION ELECTRICAL DETAIL

02/10/2021 Rev. 2

ELECTRICIAN:
1. WIRE MAIN CONTROL PANEL PER INCLUDED SCHEMATIC
2. WIRE ALL FANS PER INCLUDED SCHEMATIC
3. WIRE SHUNT TRIP BREAKER (OPTIONAL)
4. WIRE UDS APPLIANCE KILL SWITCH, IF EQUIPPED (OPTIONAL)
5. WIRE GAS VALVE

FS-1: MASTER

ELECTRICAL CONTRACTOR REQUIREMENT

ITEM	CONNECTION IN PANEL	CONNECTION IN DEVICE	VOLTAGE	AMPERAGE	COMMENTS
SHUNT TRIP BREAKER (OPTIONAL)	ST & N1	BREAKER COIL (A1 & A2)	120 VAC	< 4 AMPS	ST TO A1 ON SHUNT BREAKER COIL, AND NEUTRAL TO A2 ON SHUNT TRIP BREAKER COIL
CONTROL PANEL POWER	H1 & N1 + GROUND	CIRCUIT BREAKER	120 VAC	15 AMPS	CONTROL PANEL POWER MUST NOT BE RUN THROUGH SHUNT TRIP BREAKER
UDS APPLIANCE KILL SWITCH (OPTIONAL)	KTS & N1	KTS & N1	120 VAC	< 4 AMPS	KILL SWITCH TERMINALS MUST BE IN SERIES WITH OTHER KILL SWITCHES
REMOTE 120VAC ANSUL AUTOMAN (OPTIONAL)	AU1, AU2	SOLENOID	120 VAC	< 6 AMPS	120V TO AU1, AU2 TO ANSUL ELECTRIC AUTOMAN, ANSUL SOLENOID TO NEUTRAL
GAS VALVE	LGV & N1D (IF 24 VDC) GAS & N1 (IF 120 VAC)	RED/RED/GREEN	24 VDC OR 120 VAC	< 10 AMPS	IF 24 VDC - 3 WIRES & GROUND, N1D TO RED, LGV TO RED, AND GREEN TO GROUND IF 120 VAC - 2 WIRES & GROUND GAS TO RED, N1 TO RED, AND GREEN TO GROUND

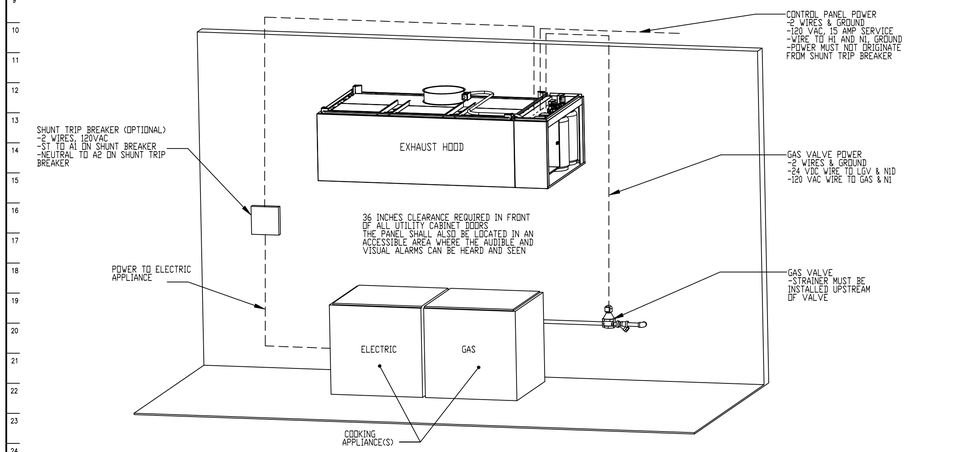

NOTE: SEE INSTALLATION, OPERATION, AND MAINTENANCE MANUAL FOR FURTHER INSTRUCTIONS

REVISIONS

DESCRIPTION	DATE:

CAPTIVEAIRE
www.captiveaire.com
Montana
PO Box 1089, 100 Blerney Creek Rd, Unit B/C, Lakeside, MT 59922 PHONE: FAX: 9192275973 EMAIL: reg88@captiveaire.com

Twin Falls Jail
TWIN FALLS, ID, 83301

DATE: 1/23/2025

DWG.#: 7294832

DRAWN BY: NDC-88

SCALE: 3/4" = 1'-0"

MASTER DRAWING

SHEET NO.
11

JOB NO	MODEL NUMBER	DRAWN BY	SCHEMATIC TYPE	DESCRIPTION OF OPERATION:
7294832	DCV-2111		INSTALL	Fire System #1 TANK FS - 40/40/40/40.
	JOB NAME: Twin Falls Jail	DATE: 1/23/2025	DWG NO: ECP #1-4	

TANK PROTECTION LOW-VOLTAGE DETAIL

10/01/2023 Rev. 3

FS-1: MASTER

ALARM CONTRACTOR:
1. WIRE MANUAL ACTUATION DEVICE(S), REMOTE FIRESTAT(S), CORE INTERLOCK(S), FIRE SENSOR(S) AND FIRE ALARM CONTACTS
2. COMPLETE FINAL HOOKUP OF SYSTEM
3. VERIFY FINAL FIRE SYSTEM TEST

ALARM CONTRACTOR REQUIREMENT

ITEM	CONNECTION IN PANEL	CONNECTION ON DEVICE	VOLTAGE	AMPERAGE	COMMENTS
MANUAL ACTUATION DEVICE(S)	101 AND 104 102 AND 103	1 & 2	24 VDC	< 1.0 AMPS	WIRE MANUAL ACTUATION DEVICE TERMINAL 1 BETWEEN CORE PANEL TERMINALS 102 AND 103 WIRE MANUAL ACTUATION DEVICE TERMINAL 2 BETWEEN CORE PANEL TERMINALS 101 AND 104 JUMPER 101 TO 104 AND 102 TO 103 IF NO MANUAL ACTUATION DEVICE IS INSTALLED
MANUAL ACTUATION DEVICE COVER	N/A	N/A	N/A	N/A	MANUAL ACTUATION DEVICE COVER MUST BE INSTALLED IF SURFACE MOUNTED, USE COVER EXTENSION STI-6531B
REMOTE FIRESTAT SENSOR(S)	21 AND 24 22 AND 23	BLACK AND WHITE	24 VDC	< 1.0 AMPS	WIRE FIRE SENSOR WHITE WIRES BETWEEN HOOD CORE PANEL TERMINALS 22 AND 23 WIRE FIRE SENSOR BLACK WIRE BETWEEN HOOD CORE PANEL TERMINALS 21 AND 24 HIGH TEMP (842°F) #4416G16SFE9 (WHT) & #4416G16SFE0 (BLK)WIRE (OR SIMILAR ONLY IF RAN OF HOOD; OTHERWISE BELDEN #6320UL OR SIMILAR PLENUM RATED WIRE; SEE FIGURE 1
FIRE ALARM CONTACT	AL1, AL2	VARIES	50V MAX (AC/DC)	UP TO 1 AMP	FIRE ALARM RELAY CONTACTS FOR BUILDING FIRE ALARM LOCATED IN THE CORE ELECTRICAL CONTROL PANEL
CORE INTERLOCK(S)	CA, CB, CC	CA, CB, CC	RS-485 COMMUNICATIONS SIGNAL		CORE SYSTEM (1) CA, TO CORE SYSTEM (2) CA. CORE SYSTEM (1) CB, TO CORE SYSTEM (2) CB. CORE SYSTEM (1) CC, TO CORE SYSTEM (2) CC. USE BELDEN# 88760 OR SIMILAR WIRE
TROUBLE CONTACT	TBC, TBL, TOK	VARIES	MAX 120 VAC	UP TO 6 AMPS	WIRE TO TBL & TBC NORMALLY OPEN CONTACT, CLOSES IN TROUBLE CONDITION
CORE COMMUNICATIONS CABLE	RJ-45 Jack	INTERNET CONNECTION	SIGNAL	<1.0 AMPS	TYPICAL CONNECTION CAT5 CABLE TO LOCAL AREA NETWORK VIA ETHERNET SWITCH OR WIRELESS ROUTER WITH VALID INTERNET CONNECTION

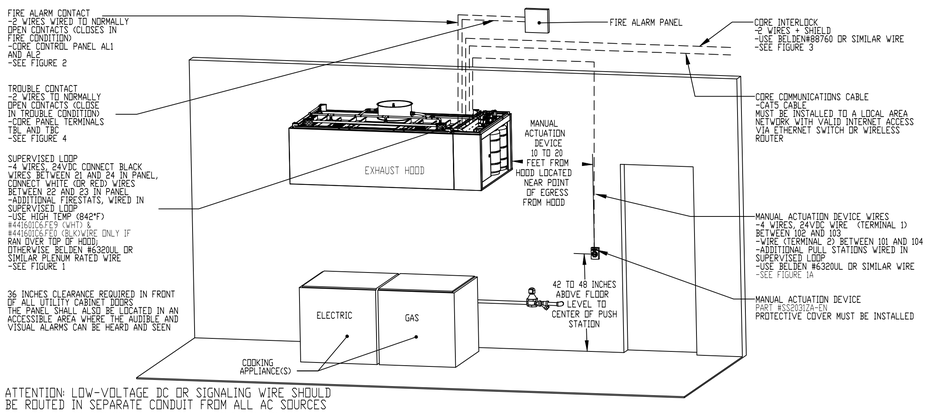

ATTENTION: LOW-VOLTAGE DC OR SIGNALING WIRE SHOULD BE ROUTED IN SEPARATE CONDUIT FROM ALL AC SOURCES

NOTE: SEE INSTALLATION, OPERATION, AND MAINTENANCE MANUAL FOR FURTHER INSTRUCTIONS

JOB NO	MODEL NUMBER	DRAWN BY	SCHEMATIC TYPE	DESCRIPTION OF OPERATION:
7294832	DCV-2111		INSTALL	Fire System #1 TANK FS - 40/40/40/40.
	JOB NAME: Twin Falls Jail	DATE: 1/23/2025	DWG NO: ECP #1-5	

TANK PROTECTION LOW-VOLTAGE FIGURES

10/01/2023 Rev. 17

FS-1: MASTER

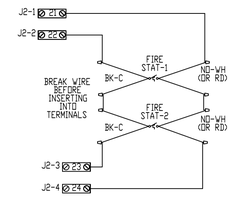

WIRING CONNECTIONS FOR FIRESTAT LOOP
FIGURE 1

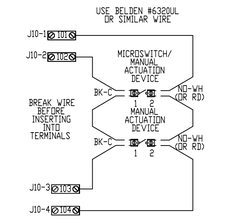

WIRING CONNECTIONS FOR MANUAL ACTUATION LOOP
FIGURE 1A

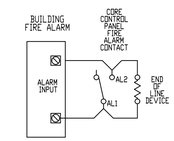

WIRING CONNECTIONS FOR FIRE ALARM CONTACT
FIGURE 2

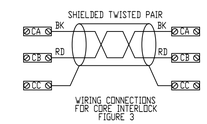

WIRING CONNECTIONS FOR CORE INTERLOCK
FIGURE 3

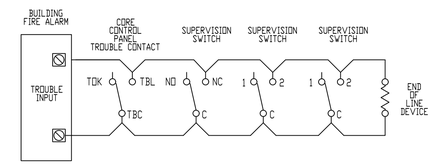

WIRING CONNECTIONS FOR TROUBLE CONTACT
FIGURE 4

ATTENTION: LOW-VOLTAGE DC OR SIGNALING WIRE SHOULD BE ROUTED IN SEPARATE CONDUIT FROM ALL AC SOURCES

NOTE: SEE INSTALLATION, OPERATION, AND MAINTENANCE MANUAL FOR FURTHER INSTRUCTIONS

REVISIONS

DESCRIPTION	DATE:

CAPTIVEAIRE
www.captiveaire.com
Montana
PO Box 1089, 100 Blerney Creek Rd, Unit B/C, Lakeside, MT 59922 PHONE: FAX: 9192275973 EMAIL: reg88@captiveaire.com

Twin Falls Jail
TWIN FALLS, ID, 83301

DATE: 1/23/2025

DWG.#: 7294832

DRAWN BY: NDC-88

SCALE: 3/4" = 1'-0"

MASTER DRAWING

SHEET NO. 12

UNLESS SPECIFIED OTHERWISE, ALL FACTORY AC WIRING 16 AWG. ALL FACTORY DC WIRING 18 AWG.

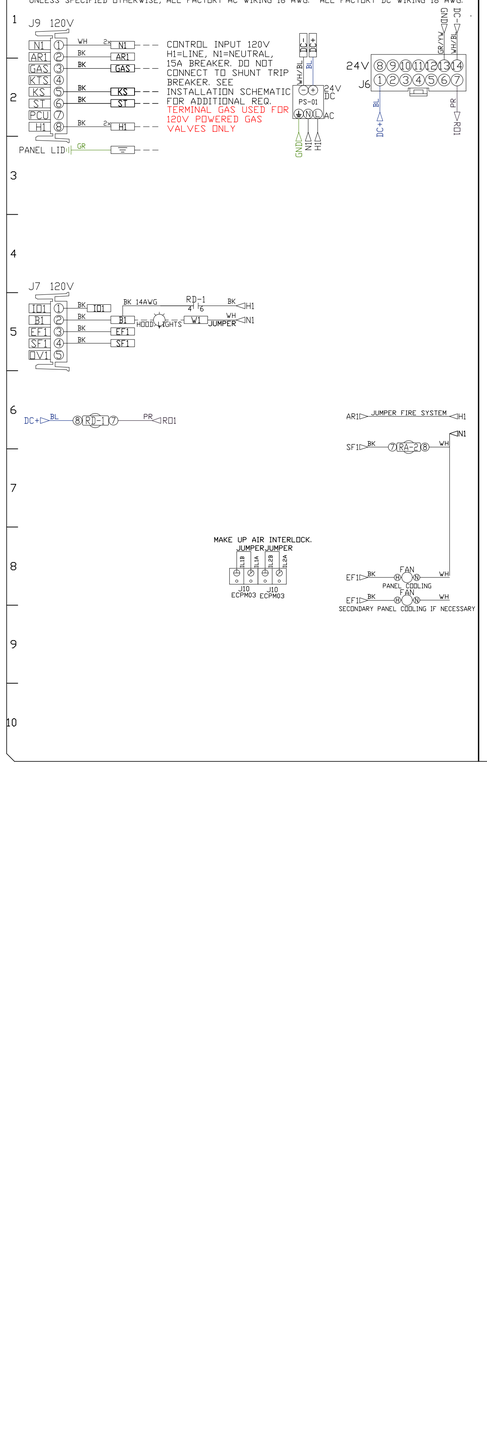

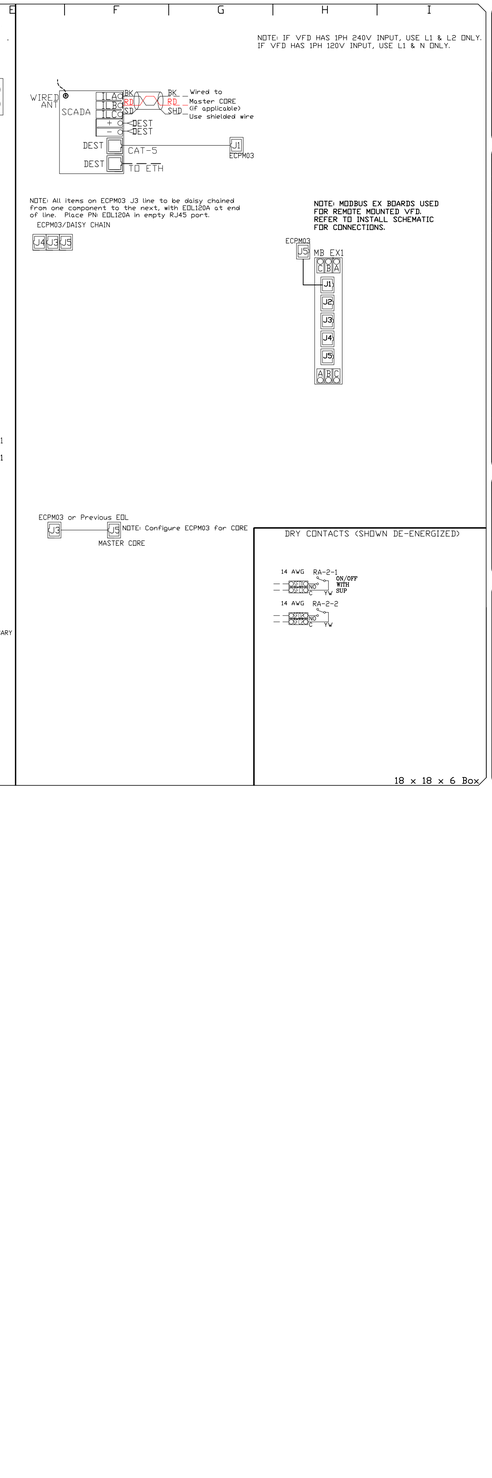

18 x 18 x 6 Box

FACTORY WIRING SCHEMATIC CIRCUIT BOARDS ECPM03

RA-x 120 VAC RELAY		RD-x 24 VDC RELAY	
NO	4 3	NO	4 3
NC	2 1	NC	2 1
COIL	8 7	COIL	8 7
COM	6 5	COM	6 5

COMPONENT LIST

LABEL	DESCRIPTION
ST-X	Starter PN varies
DL-X	Overload PN varies
C-X	Contactor PN varies
PS-1	Power Sup. 24VDC PN: MDR-60-24-SC
RA-x	120V Relay DPDT PN 341100843
RD-x	24VDC Light Relay PN 341100888
MB EX1	Modbus Expansion PN MODBUS-EX
SCADA	SCADA Module PN

LEGEND

- - - FIELD WIRING
——— FACTORY WIRING

BK- BLACK YW- YELLOW
BL- BLUE GY- GREY
BR- BROWN PR- PURPLE
OR- ORANGE RD- RED
WH- WHITE
OR/BL- OR/BL STRIPE
BL/RD- BL/RD STRIPE
RD/GN- RD/GN STRIPE
WH/BL- WH/BL STRIPE

JOB NAME: Twin Falls Jail
DRAWING TITLE: DCV-2111
DESCRIPTION OF OPERATION: Demand Control Ventilation, w/ control of Fans based on Heat. Fans: Supply Fan, Exhaust, on in Fire, Lights out in Fire, Fans modulate based on duct temperature. INVERTER DUTY 3 PHASE MOTOR REQUIRED FOR USE WITH VFD. Room temperature sensor shipped loose for field installation.Verify distance between VFD and Motor; additional cost could apply if distance exceeds 50 feet.

JOB NO	DRAWN BY
7294832	
TYPE	DATE
FACTORY	1/23/2025

DWG NO ECP #1-6

MOTOR POWER CIRCUITS. SEE INSTALLATION DIAGRAM FOR FIELD WIRING REQUIREMENTS.

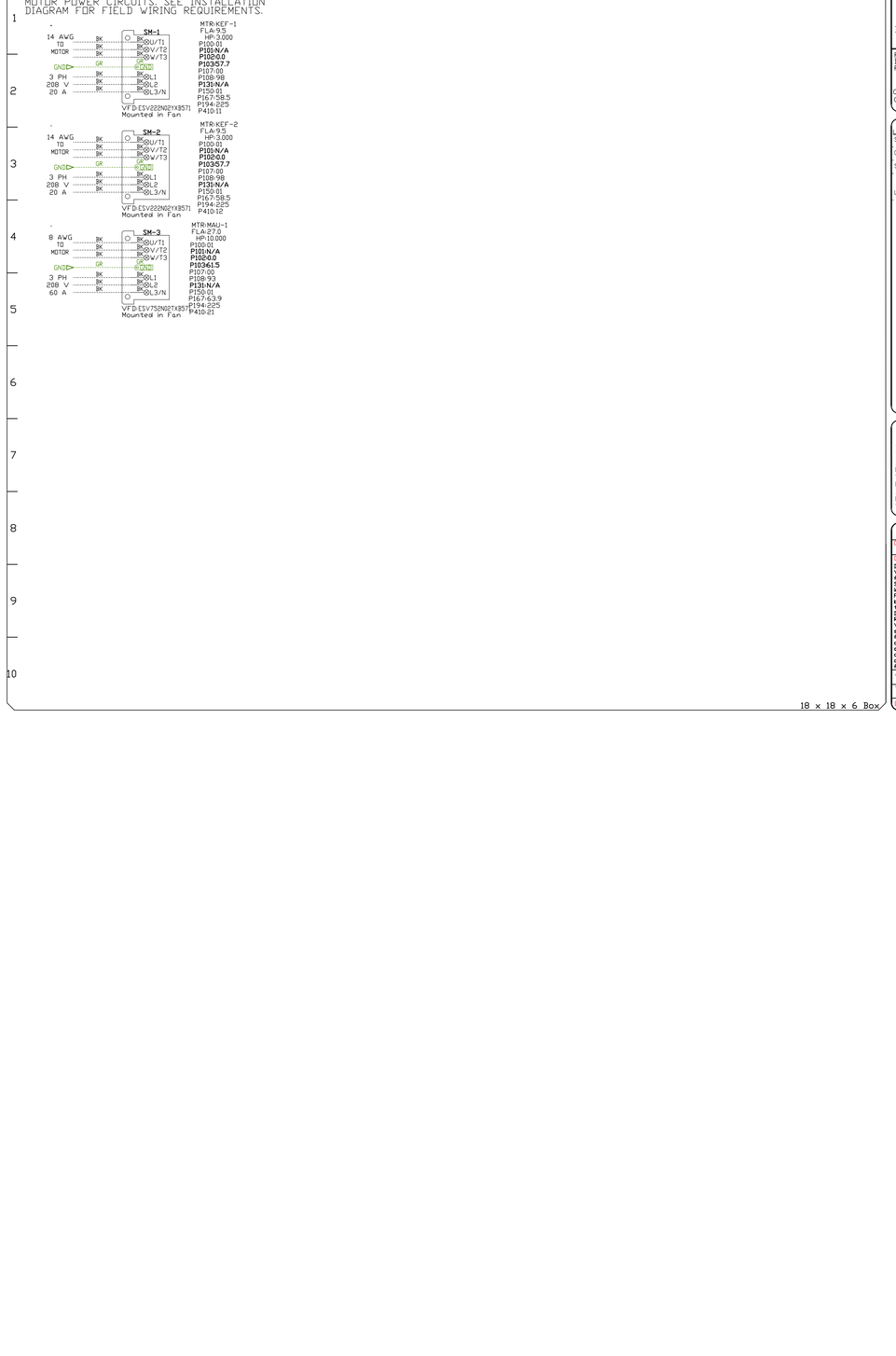

18 x 18 x 6 Box

FACTORY WIRING SCHEMATIC CIRCUIT BOARDS ECPM03
DCV Rev. 2.10.00
HMI Rev. 2.10.00

RA-x 120 VAC RELAY		RD-x 24 VDC RELAY	
NO	4 3	NO	4 3
NC	2 1	NC	2 1
COIL	8 7	COIL	8 7
COM	6 5	COM	6 5

COMPONENT LIST

LABEL	DESCRIPTION
ST-X	Starter PN varies
C-X	Contactor PN varies
SM-X	VFD PN varies
LR-X	Line/Load Reactor PN varies

LEGEND

- - - FIELD WIRING
——— FACTORY WIRING

BK- BLACK YW- YELLOW
BL- BLUE GY- GREY
BR- BROWN PR- PURPLE
OR- ORANGE RD- RED
WH- WHITE
OR/BL- OR/BL STRIPE
BL/RD- BL/RD STRIPE
RD/GN- RD/GN STRIPE
WH/BL- WH/BL STRIPE

JOB NAME: Twin Falls Jail
DRAWING TITLE: DCV-2111
DESCRIPTION OF OPERATION: Demand Control Ventilation, w/ control of Fans based on Heat. Fans: Supply Fan, Exhaust, on in Fire, Lights out in Fire, Fans modulate based on duct temperature. INVERTER DUTY 3 PHASE MOTOR REQUIRED FOR USE WITH VFD. Room temperature sensor shipped loose for field installation.Verify distance between VFD and Motor; additional cost could apply if distance exceeds 50 feet.

JOB NO	DRAWN BY
7294832	
TYPE	DATE
FACTORY	1/23/2025

DWG NO ECP #1-7

REVISIONS	
DESCRIPTION	DATE:

CAPTIVEAIRE
www.captiveaire.com
Montana
PO Box 1089, 100 Blemey Creek Rd, Unit B/C, Lakeside, MT, 59922 PHONE: FAX: 9192275973 EMAIL: reg88@captiveaire.com

Twin Falls Jail
TWIN FALLS, ID, 83301

DATE: 1/23/2025

DWG.#: 7294832

DRAWN BY: NDC-88

SCALE: 3/4" = 1'-0"

MASTER DRAWING

SHEET NO. 13

ATTENTION: LOW-VOLTAGE DC OR SIGNALING WIRE SHOULD BE ROUTED IN SEPARATE CONDUIT FROM ALL AC SOURCES.

FS-1: MASTER

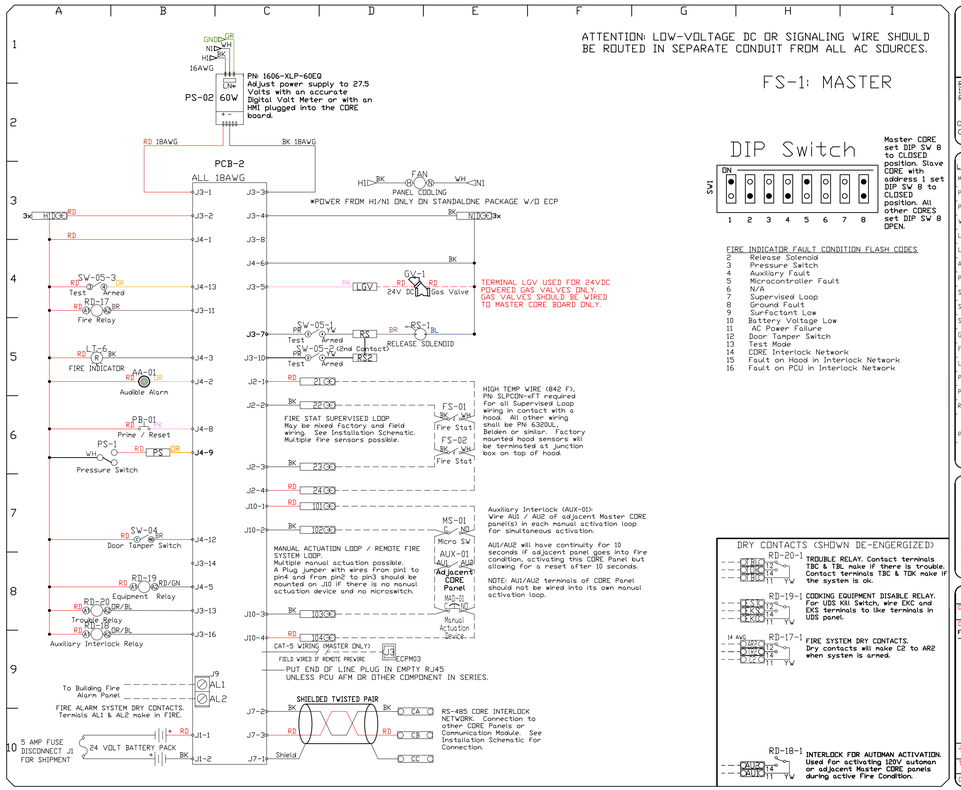

DIP Switch

Master CORE set DIP SW 8 to CLOSED position. Slave CORE with address 1 set DIP SW 8 to CLOSED position. All other CORES set DIP SW 8 OPEN.

FIRE INDICATOR FAULT CONDITION FLASH CODES

2	Release Solenoid
3	Pressure Switch
4	Auxiliary Fault
5	Microcontroller Fault
6	N/A
7	Supervised Loop
8	Ground Fault
9	Surfactant Low
10	Battery Voltage Low
11	AC Power Failure
12	Door Tamper Switch
13	Test Mode
14	CORE Interlock Network
15	Fault on Hood in Interlock Network
16	Fault on PCU in Interlock Network

DRY CONTACTS (SHOWN DE-ENGERGIZED)

RD-20-1 — TROUBLE RELAY. Contact terminals TBC & TBL make if there is trouble. Contact terminals TBC & TDK make if the system is ok.

RD-19-1 — COOKING EQUIPMENT DISABLE RELAY. For UDS Kill Switch, wire EKC and EKS terminals to like terminals in UDS panel.

RD-17-1 — FIRE SYSTEM DRY CONTACTS. Dry contacts will make C2 to AR2 when system is armed.

RD-18-1 — INTERLOCK FOR AUTOMAN ACTIVATION. Used for activating 120V automan or adjacent Master CORE panels during active Fire Condition.

FACTORY WIRING SCHEMATIC CORE FIRE PROTECTION

RA-x 120 VAC RELAY			RD-x 24 VDC RELAY		
NO	4	3	NO	4	3
NC	2	1	NC	2	1
COIL	8	7	COIL	8	7
COM	6	5	COM	6	5

COMPONENT LIST

LABEL	DESCRIPTION
MAD-01	MANUAL ACTIVATION PN DEVICE
PCB-2	CORE PCB PN PCBCORE-APP
PS-02	CORE POWER SUPPLY PN 1606-XLP-60E
WS-x	Water Solenoid PN varies
LT-06	24V Red Ind. Light PN WL-12M20-28V
LL-01	Surf. Level Sensor PN A0551
AA-01	Audible Alarm PN SCC10LA3P1B
PB-XX	Prime/Reset Switch PN 2B4BA2/2B4BZ005
SV-05	TEST/ARM Switch PN 2B5A2
SV-04	Tamper Switch PN BZ-2R02-A2
SP-1	Surfactant Pump PN 5000-801
GV-1	24v DC Gas Valve PN varies
FS-XX	Duct Fire Sensor PN 12-F2B01-00360
LT-05	24V YLW Ind. Light PN WL-12M20-28V
PS-01	Remote Pull/Push Station PN STI-5524B
PWS-01	24VDC Power Supply PN 24VDC 18W POWER
RD-XX	24VDC Phoenix Relay PN PLC-RPT-24DC/21
PS	Pressure Switch PN EVC-PRESSURE

LEGEND

FIELD WIRING
FACTORY WIRING

BK- BLACK
BL- BLUE
BR- BROWN
OR- ORANGE
WH- WHITE
YW- YELLOW
GY- GREY
PR- PURPLE
GR- GREEN
BR/BL- BR/BL STRIPE
BL/RD- BL/RD STRIPE
RD/GN- RD/GN STRIPE
WH/BL- WH/BL STRIPE

JOB NAME	Twin Falls Jail
DRAWING NAME	DCV-2111
DESCRIPTION OF OPERATION	Fire System #1 TANK FS - 4a/4b/4d/4d.
JOB NO	7294832
DRAWN BY	
TYPE	FACTORY
DATE	1/23/2025
DWG NO	ECP #1-8

REVISIONS

DESCRIPTION	DATE:

CAPTIVEAIRE
www.captiveaire.com
Montana
PO Box 1089, 100 Blerney Creek Rd, Unit B/C, Lakeside, MT. 59922 PHONE: FAX: 9192275973 EMAIL: reg88@captiveaire.com

Twin Falls Jail
TWIN FALLS, ID, 83301

DATE: 1/23/2025

DWG.#: 7294832

DRAWN BY: NDC-88

SCALE: 3/4" = 1'-0"

MASTER DRAWING

SHEET NO.
14

DEMAND CONTROL VENTILATION HOOD CONTROL PANEL SPECIFICATIONS:

- CONTROLS SHALL BE LISTED BY ETL (UL 508A) AND SHALL COMPLY WITH DEMAND VENTILATION SYSTEM TURNDOWN REQUIREMENTS OUTLINED IN IECC 403.7.5 (2021).
- THE CONTROL ENCLOSURE SHALL BE NEMA 1 RATED AND LISTED FOR INSTALLATION INSIDE OF THE EXHAUST HOOD UTILITY CABINET. THE CONTROL ENCLOSURE MAY BE CONSTRUCTED OF STAINLESS STEEL OR PAINTED STEEL.
- TEMPERATURE PROBE(S) LOCATED IN THE EXHAUST DUCT RISER(S) SHALL BE CONSTRUCTED OF STAINLESS STEEL.
- A DIGITAL CONTROLLER SHALL BE PROVIDED TO ACTIVATE THE HOOD EXHAUST FANS DYNAMICALLY BASED ON A FIXED DIFFERENTIAL BETWEEN THE AMBIENT AND DUCT TEMPERATURES SENSORS. THIS FUNCTION SHALL MEET THE REQUIREMENTS OF IMC 507.1.1.
- A DIGITAL CONTROLLER SHALL PROVIDE ADJUSTABLE HYSTERESIS SETTINGS TO PREVENT CYCLING OF THE FANS AFTER THE COOKING APPLIANCES HAVE BEEN TURNED OFF AND/OR THE HEAT IN THE EXHAUST SYSTEM IS REDUCED.
- A DIGITAL CONTROLLER SHALL PROVIDE AN ADJUSTABLE MINIMUM FAN RUN-TIME SETTING TO PREVENT FAN CYCLING.
- VARIABLE FREQUENCY DRIVES (VFDS) SHALL BE PROVIDED FOR FANS AS REQUIRED. THE DIGITAL CONTROLLER SHALL MODULATE THE VFDS BETWEEN A MINIMUM SETPOINT AND A MAXIMUM SETPOINT ON DEMAND. THE DUCT TEMPERATURE SENSOR INPUT(S) TO THE DIGITAL CONTROLLER SHALL BE USED TO CALCULATE THE SPEED REFERENCE SIGNAL.
- THE VFD SPEED RANGE OF OPERATION SHALL BE FROM 0% TO 100% FOR THE SYSTEM, WITH THE ACTUAL MINIMUM SPEED SET AS REQUIRED TO MEET MINIMUM VENTILATION REQUIREMENTS.
- AN INTERNAL ALGORITHM TO THE DIGITAL CONTROLLER SHALL MODULATE SUPPLY FAN VFD SPEED PROPORTIONAL TO ALL EXHAUST FANS THAT ARE LOCATED IN THE SAME FAN GROUP AS THE SUPPLY FAN.
- THE SYSTEM SHALL OPERATE IN PREP MODE DURING LIGHT COOKING LOAD OR COOL DOWN MODE WHEN SUFFICIENT HEAT REMAINS UNDERNEATH THE HOOD SYSTEM AFTER COOKING OPERATIONS HAVE COMPLETED. OPERATION DURING EITHER OF THESE PERIODS WILL DISABLE THE SUPPLY FANS AND PROVIDE AN EXHAUST FAN SPEED THAT IS EQUAL TO THE MINIMUM VENTILATION REQUIREMENT.
- A DIGITAL CONTROLLER SHALL DISABLE THE SUPPLY FAN(S), ACTIVATE THE EXHAUST FAN(S), ACTIVATE THE APPLIANCE SHUNT TRIP, AND DISABLE AN ELECTRIC GAS VALVE AUTOMATICALLY WHEN FIRE CONDITION IS DETECTED ON A COVERED HOOD.
- A DIGITAL CONTROLLER SHALL ALLOW FOR EXTERNAL BMS FAN CONTROL VIA DRY CONTACT (EXTERNAL CONTROL SHALL NOT OVERRIDE FAN OPERATION LOGIC AS REQUIRED BY CODE).
- AN LCD INTERFACE SHALL BE PROVIDED WITH THE FOLLOWING FEATURES:
  - A. ON/OFF PUSH BUTTON FAN & LIGHT SWITCH ACTIVATION.
  - B. INTEGRATED GAS VALVE RESET FOR ELECTRONIC GAS VALVES (NO RESET RELAY REQUIRED).
  - C. VFD FAULT DISPLAY WITH AUDIBLE & VISUAL ALARM NOTIFICATION.
  - D. DUCT TEMPERATURE SENSOR FAILURE DETECTION WITH AUDIBLE & VISUAL ALARM NOTIFICATION.
  - E. MIS-WIRED DUCT TEMPERATURE SENSOR DETECTION WITH AUDIBLE & VISUAL ALARM NOTIFICATION.
  - F. A SINGLE LOW VOLTAGE CAT-5 RJ45 WIRING CONNECTION.
  - G. AN ENERGY SAVINGS INDICATOR THAT UTILIZES MEASURED KWH FROM THE VFDS.

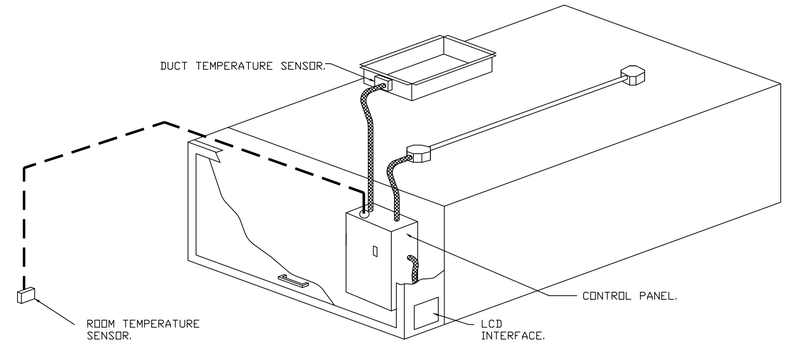

TYPICAL HOOD CONTROL PANEL INSTALLATION

SEQUENCE OF OPERATIONS:

THE HOOD CONTROL PANEL IS CAPABLE OF OPERATING IN ONE OR MORE OF THE FOLLOWING STATES AT ANY GIVEN TIME:

- AUTOMATIC: THE SYSTEM OPERATES BASED ON THE DIFFERENTIAL BETWEEN ROOM TEMPERATURE AND THE TEMPERATURE AT THE HOOD CAVITY OR EXHAUST DUCT COLLAR. FANS ACTIVATE AT A CONFIGURABLE TEMPERATURE DIFFERENTIAL THRESHOLD. DEPENDING ON THE JOB CONFIGURATION EACH FAN ZONE CAN BE CONFIGURED AS STATIC OR DYNAMIC. THESE TERMS REFER TO WHETHER A VARIABLE MOTOR (SUCH AS EC MOTORS OR VFD DRIVEN MOTORS) MODULATE WITH TEMPERATURE. IF THE PANEL IS EQUIPPED WITH VARIABLE SPEED FANS AND THE ZONE IS DEFINED AS "DYNAMIC", THESE WILL MODULATE WITHIN A USER-DEFINED RANGE BASED ON THE TEMPERATURE DIFFERENTIAL. PANELS EQUIPPED WITH VARIABLE SPEED FANS AND A FAN ZONE DEFINED AS "STATIC", FANS WILL RUN AT A SET SPEED CALCULATED FOR THE DRIVE. DEMAND CONTROL VENTILATION SYSTEMS ARE CAPABLE OF MODULATING EXHAUST AND MAKE UP AIR FAN SPEEDS PER THE REQUIREMENTS OUTLINED IN IECC 403.7.5 (2021).
- MANUAL: THE SYSTEM OPERATES BASED ON HUMAN INPUT FROM AN HMI.
- SCHEDULE: A WEEKLY SCHEDULE CAN BE SET TO RUN FANS FOR A SPECIFIED PERIOD THROUGHOUT THE DAY. THERE ARE THREE OCCUPIED TIMES PER DAY TO ALLOW FOR THE USER TO SET UP A TIME THAT IS SUITABLE TO THEIR NEEDS. ANY TIME THAT IS WITHIN THE DEFINED OCCUPIED TIME, THE SYSTEM WILL RUN AT MODULATION MODE AND FOLLOW THE FAN PROCEDURE ALGORITHM BASED ON TEMPERATURE DURING THIS TIME. DURING UNOCCUPIED TIME, THE SYSTEM WILL HAVE AN EXTRA OFFSET TO PREVENT UNINTENDED ACTIVATION OF THE SYSTEM DURING A TIME WHERE THE SYSTEM IS NOT BEING OCCUPIED.
- OTHER: THE SYSTEM OPERATES BASED ON THE INPUT FROM AN EXTERNAL SOURCE (DDC, BMS OR HARD-WIRED INTERLOCK).
- FIRE: UPON ACTIVATION OF THE HOOD FIRE SUPPRESSION SYSTEM, THE EXHAUST FAN WILL COME ON OR CONTINUE TO TO RUN, THE HOOD MAKEUP AIR WILL SHUTDOWN, AND A SIGNAL WILL BE SENT FOR ACTIVATING THE SHUNT TRIP BREAKER PROVIDED BY THE ELECTRICIAN. FUEL GAS WILL SHUT OFF VIA A MECHANICAL/ELECTRICAL GAS VALVE ACTUATED BY THE HOOD FIRE SUPPRESSION SYSTEM.

REVISIONS

DESCRIPTION	DATE:

CAPTIVEAIRE
www.captiveaire.com
Montana
PO Box 1089, 100 Blerney Creek Rd, Unit B/C, Lakeside, MT 59922 PHONE: FAX: 9192275973 EMAIL: reg88@captiveaire.com

Twin Falls Jail
TWIN FALLS, ID, 83301

DATE: 1/23/2025

DWG.#: 7294832

DRAWN BY: NDC-88

SCALE: 3/4" = 1'-0"

MASTER DRAWING

SHEET NO. 15

SYSTEM DESIGN VERIFICATION (SDV)

IF ORDERED, CAS SERVICE WILL PERFORM A SYSTEM DESIGN VERIFICATION (SDV) ONCE ALL EQUIPMENT HAS HAD A COMPLETE START UP PER THE OPERATION AND INSTALLATION MANUAL. TYPICALLY, THE SDV WILL BE PERFORMED AFTER ALL INSPECTIONS ARE COMPLETE.

ANY FIELD RELATED DISCREPANCIES THAT ARE DISCOVERED DURING THE SDV WILL BE BROUGHT TO THE
ATTENTION OF THE GENERAL CONTRACTOR AND CORRESPONDING TRADES ON SITE. THESE ISSUES WILL BE DOCUMENTED AND FORWARDED TO THE APPROPRIATE SALES OFFICE. IF CAS SERVICE HAS TO
RESOLVE A DISCREPANCY THAT IS A FIELD ISSUE, THE GENERAL CONTRACTOR WILL BE NOTIFIED AND BILLED FOR THE WORK. SHOULD A RETURN TRIP BE REQUIRED DUE TO ANY FIELD RELATED DISCREPANCY THAT CANNOT BE RESOLVED DURING THE SDV, THERE WILL BE ADDITIONAL TRIP CHARGES.

DURING THE SDV, CAS SERVICE WILL ADDRESS ANY DISCREPANCY THAT IS THE FAULT OF THE MANUFACTURER. SHOULD A RETURN TRIP BE REQUIRED, THE GENERAL CONTRACTOR AND APPROPRIATE SALES OFFICE WILL BE NOTIFIED. THERE WILL BE NO ADDITIONAL CHARGES FOR MANUFACTURER DISCREPANCIES.

REVISIONS

DESCRIPTION	DATE:

CAPTIVEAIRE
www.captiveaire.com
Montana
PO Box 1089, 100 Blerney Creek Rd, Unit B/C, Lakeside, MT 59922 PHONE: FAX: 9192275973 EMAIL: reg88@captiveaire.com

Twin Falls Jail
TWIN FALLS, ID, 83301

DATE: 1/23/2025

DWG.#: 7294832

DRAWN BY: NDC-88

SCALE: 3/4" = 1'-0"

MASTER DRAWING

SHEET NO.
16